ELECTRIC TOOTH BRUSH REDESIGN PROJECT

Abstract

Our objective for Design One project was to take a modern electric toothbrush and make it a more efficient product. To research this project, we opened up the toothbrush and saw the parts that configure it, our group determined what could possible make this product better, we asked potential customers what the most important parts of brushing their teeth were, and we researched patents regarding modernizations. After all of this exploration of the product, we decided on the final additions to the product. They consist of a quieter working battery, a timer that indicates two minutes of brushing teeth and a more comfortable grip to hold.

The final design included the implementation of new features including a two-minute timer, multiple power levels, slim body, soft rubber grip, long neck, rechargeable batteries, round brush head with circular motion, and aesthetically pleasant design. These were the features which were determined to make the best quality design based off of our customer needs assessment and resulting Pugh charts. The multiple power levels are achieved through use of resistors to change the voltage and resulting power produced. The design improvements described above and represented in the figures below were implemented to produce a more ergonomic, durable, cleansing efficient, sustainable, and low cost product.

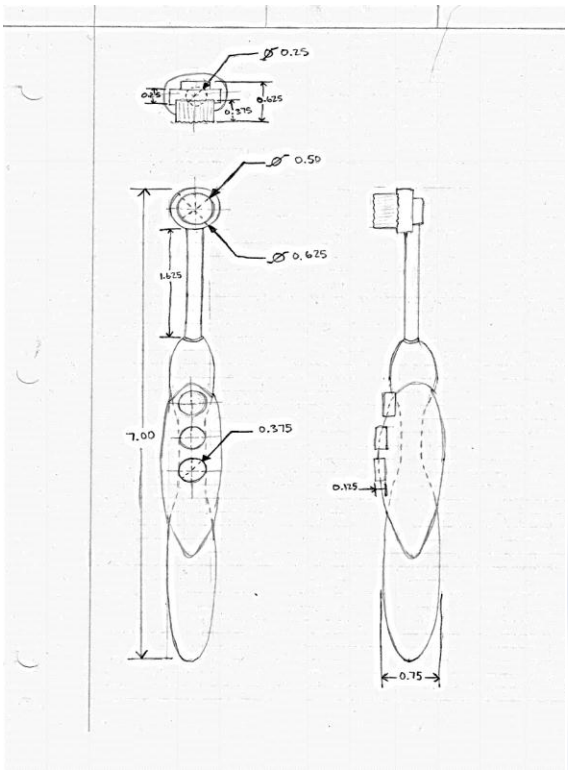

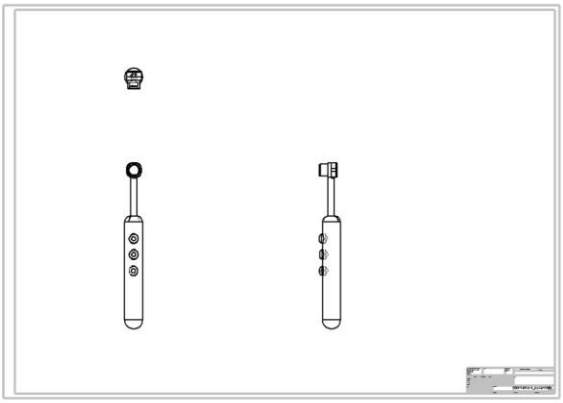

[Project Report]
[Project Presentation]

Project Report

Project Presentation

Project 2 Final Design: Bike-to-Shelf

Abstract

Our objective for “Project 2: Design for Emerging Markets” was to develop a shelf system that can be strapped onto a bicycle, carry goods very securely and open up to provide table space to display the items for potential buyers. We explored this type of product by using concepts generated from every member in our group, deciding which designs would be most beneficial and researching patents regarding any type structures that would impede us in our progression. After this very extensive research, we found a product that we think will revolutionize the mobile sales of goods in the street.

Through much design and redesign, we finally arrived at our final concept design. The concept was selected to appeal to the determined customer needs of portability, ergonomics, durability, and efficiency. Through external search, product archaeology, and creativity methods such as SCAMPER and TRIZ, we were able to produce and improve upon our design. Our bike to shelf system is most basically described as a fold-out table. There is a shelf secured to the bike by a strong clamp and bolt system which places the shelf above the rear wheel. The folded table sits on top of the shelf and is secured by a strap which wraps around the entire table and goes through a slit in the shelf. There is a tarp which may also be secured around the assembly to protect the goods, which can be stored within the folded table, from any potential weather or other cause damage. Also stored inside the folded table are the four table legs. The legs are similar to dowel rods with the addition of a cross near the top which is perpendicular to the length of the leg. When the table is assembled the legs will slide into each of the four holes drilled into the corners of the table and the cross will prevent the legs from sliding the entire way through the holes, creating a support system. This design will minimize the skill and effort of assembly, which appeals to the customer needs which we determined. The folded table will also be taller than it is wide (different length sections) which will decrease the torque acting on the bike shelf and make the system more portable for the user.

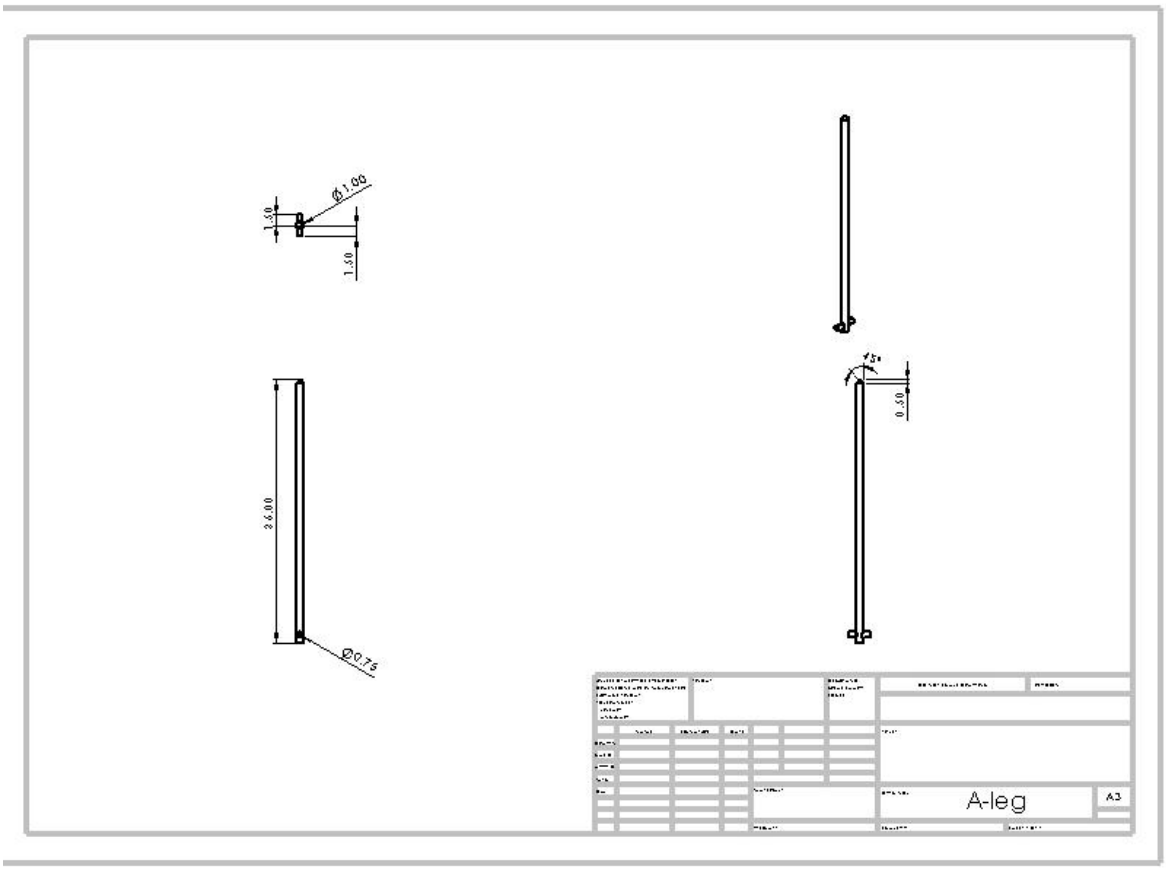
Ø1.00
1.50
1.50
26.00
Ø0.75
45°
0.50
A-leg
A3

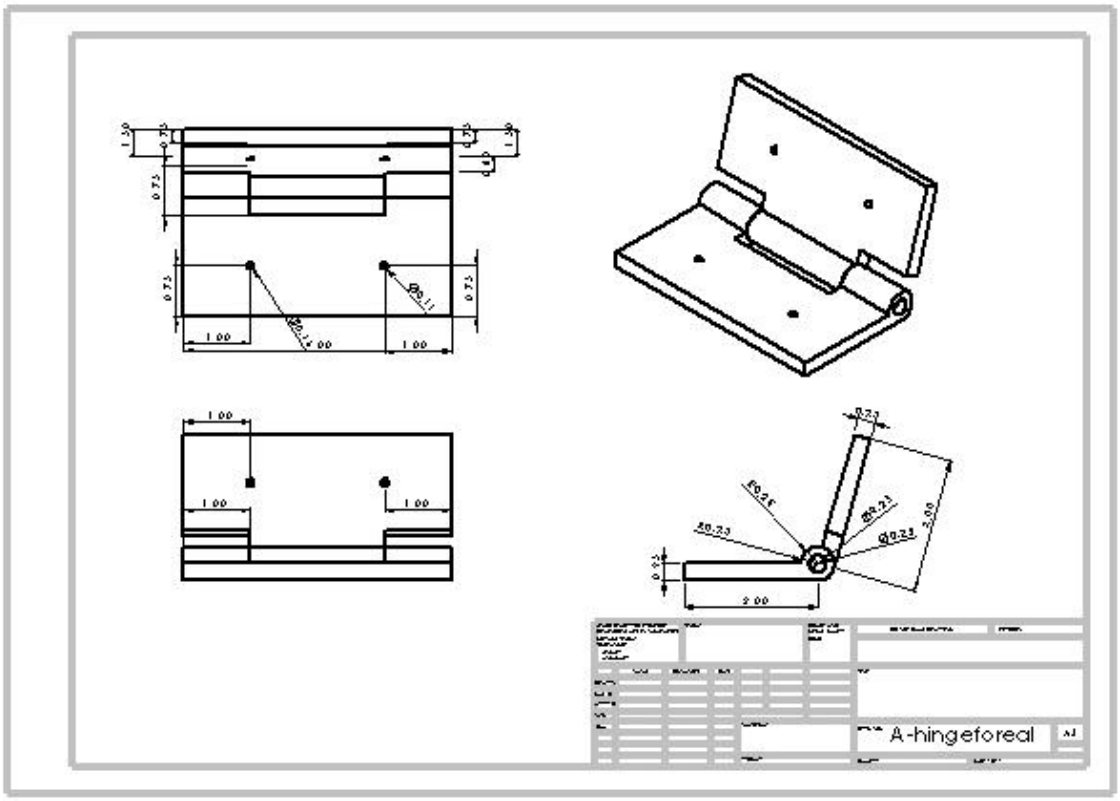
1.50
0.75
0.75
0.75
0.75
0.75
0.75
1.50
Ø0.11
Ø0.11
1.00
1.00
1.00
1.00
1.00
1.00
0.23
R0.25
R0.23
R0.23
Ø0.23
2.00
0.25
2.00
A-hingeforeal
A3

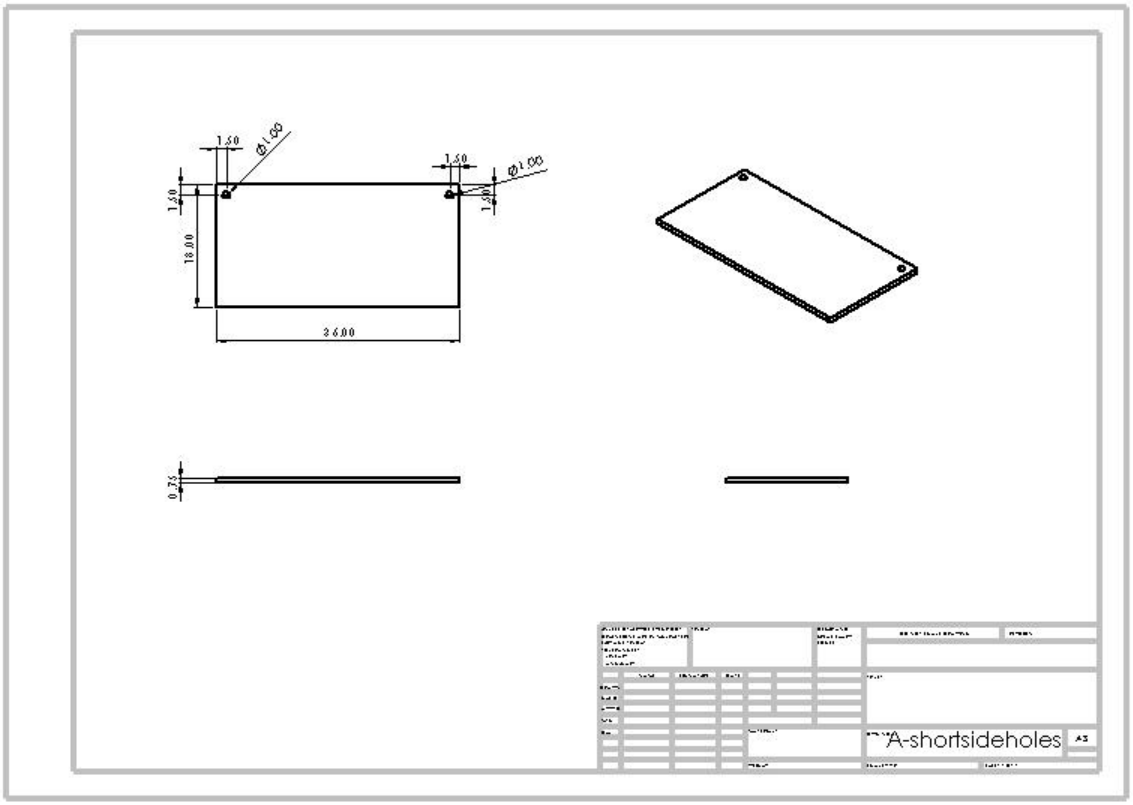
1.50
Ø1.00
1.50
Ø1.00
1.50
1.50
18.00
26.00
0.75
A-shortsideholes
A3

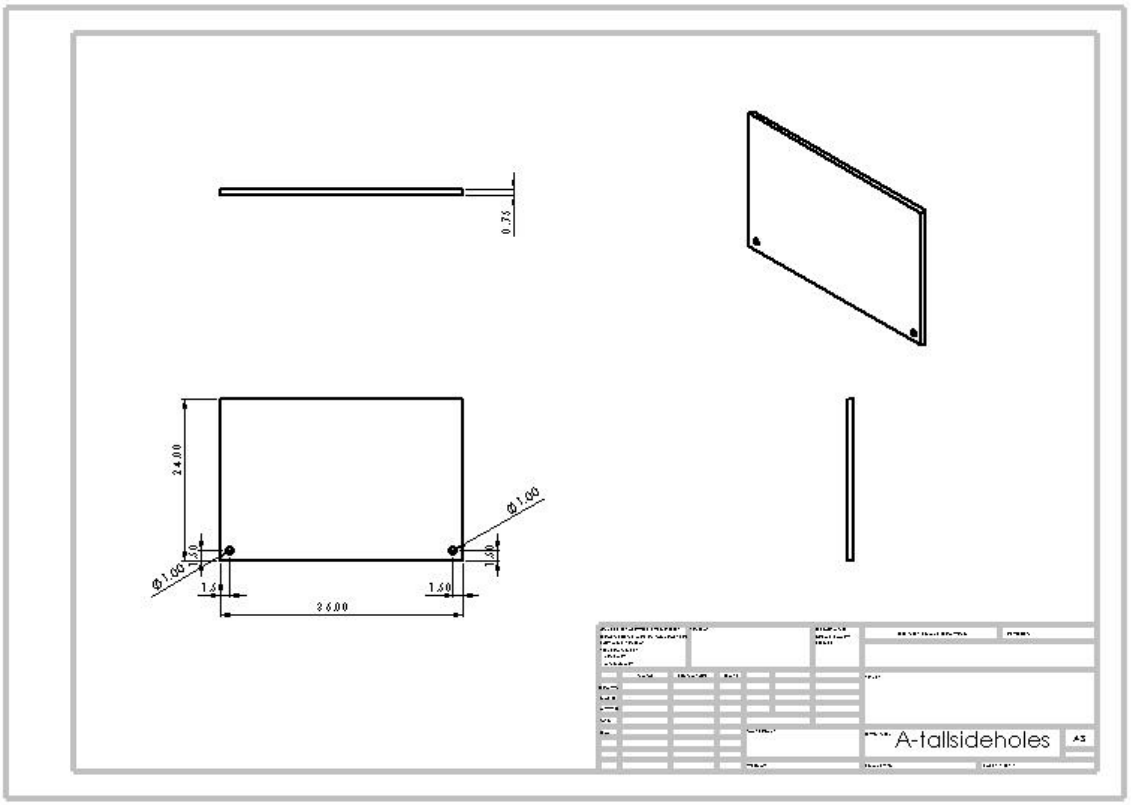
0.75
24.00
Ø1.00
Ø1.00
1.50
1.50
1.50
1.50
26.00
A-tallsideholes
A3

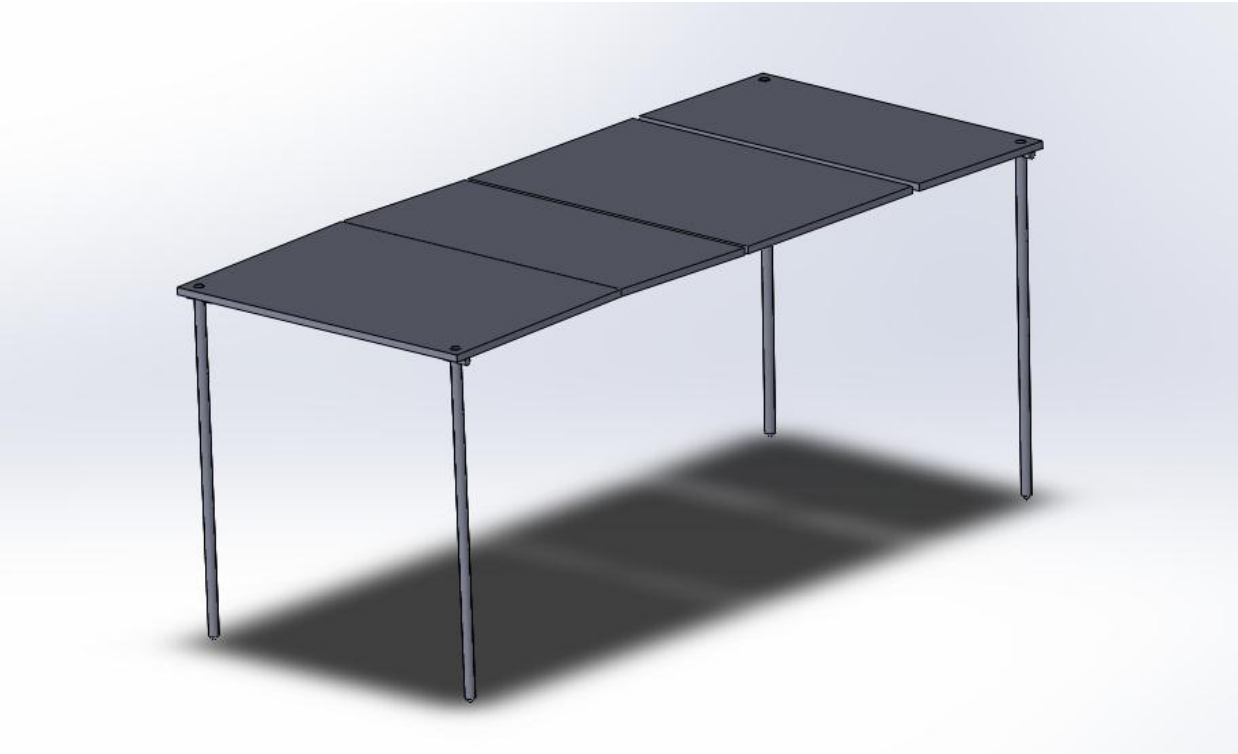

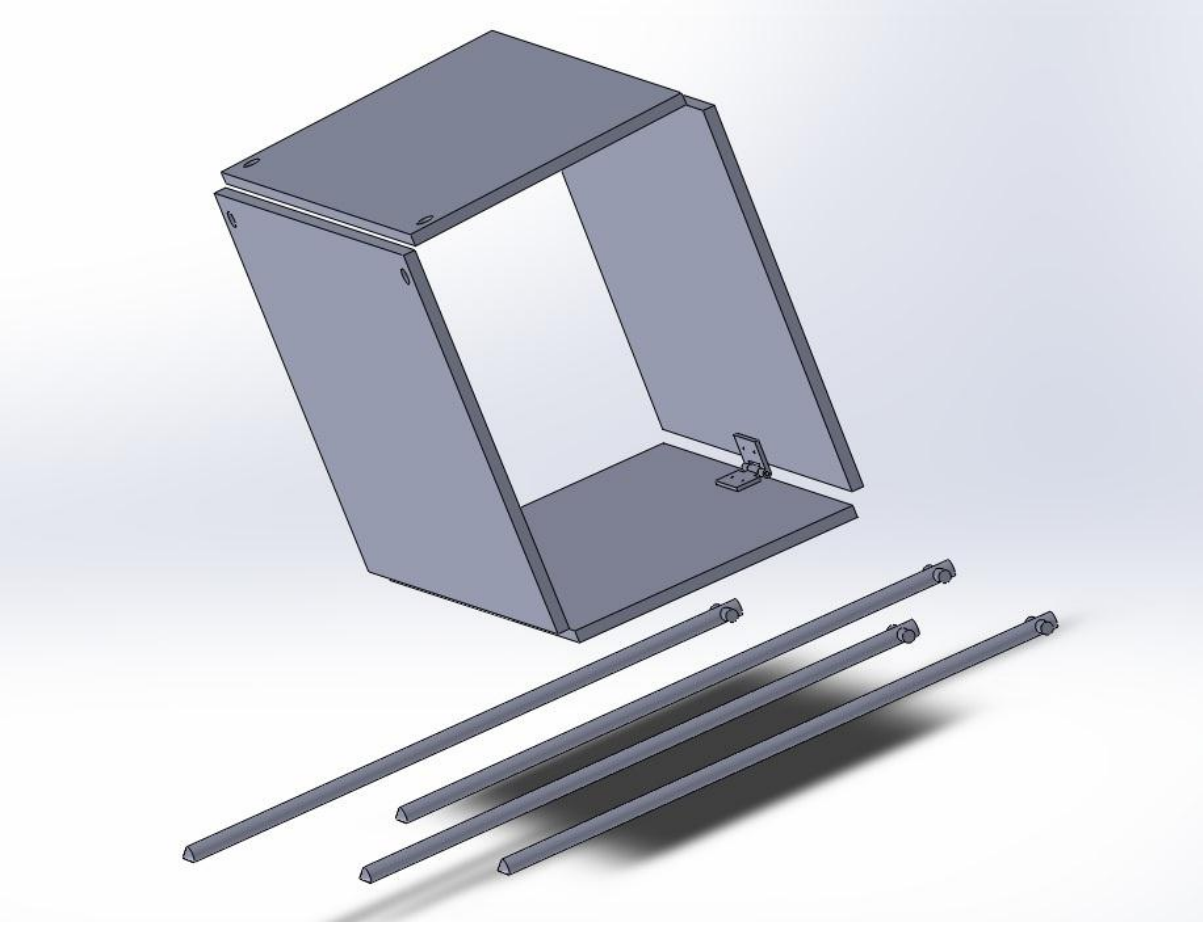

Final Report

Poster Presentation