Design Project I

Foldable Shopping Cart

A Novel, Multifunctional Foldable Shopping Cart with a Dolly

EDSGN 100 • Introduction to Engineering Design • Section 10 • Team 1

The Pennsylvania State University

Submitted by (from left to right): Kevin Wang, Yuvraj Rathore, David DeRosier, & Daniel Cordova

Submitted to Dr. Xinli Wu

Spring 2014

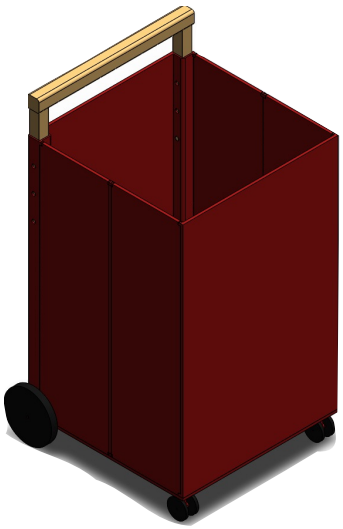

Abstract (*By Daniel Cordova)*

With an increase in urbanization, and a growing need for people to become more mobile, consumers require a product that can help sustain their busy lifestyles. The purpose of this project was to design and develop a prototype of an affordable, folding shopping cart. Contained in the following report are the problem statement, the design task, the design approach and selection, the engineering analysis, as well as the the overall process followed to create the final design.

Table of Contents

• Introduction 1

† Problem Statement 1

† Mission Statement 2

† Design Specifications 2

† Gantt Chart 3

º Customer Needs Assessment 3

º Concept Generation 4

• Design Matrix 6

^ Design Parts and Drawings (Prototype) 8

^ Prototype Images 15

º Design Features 12

º Operation Instructions 12

º Working Mechanism 16

† Cost Analysis 16

• Summary and Conclusions 18

Acknowledgments 19

Works Cited 20

º Yuvraj Rathore (Chief Editor), • Daniel Cordova, ^ Kevin Wang, † David DeRosier

Introduction *(By Daniel Cordova)*

Certainly, shopping carts are essential in today's consumer-driven society. Most people have used one at some point in their lives, but who would need or use a folding shopping cart? That was the first question taken into account when brainstorming the design of a folding shopping cart. It was concluded within the group that, that people who live in apartments and cities, as well as college students would need one. People who live in apartments, for example, oftentimes have to carry their goods a long distance or up flights of stairs. A folding shopping cart would definitely facilitate their shopping since they would not have to carry their groceries anymore, and more so, the cart would be easy to store. Based on online reviews and market data, it is evident that people would prefer a convenient and reliable folding shopping cart and not one that would crash within one week of buying it. For this reason, the criteria considered during the design process was that the cart should be reliable and easy to use, easy to store, reasonable size, and capable of holding heavy things, such as boxes of water. The design process was developed with this criteria in mind.

Problem Statement *(By David DeRosier)*

Going out and buying many items at one time is necessary for many people. It becomes hard for some consumers without access to a car to easily transport all of the items back to their apartment or dorm room. Walking back would be a

hassle if they had to carry multiple bags on their arms for multiple blocks in a city. Additionally, college students for example, need to transport many goods back and forth from their dormitories to their homes, especially during move-in days, breaks, etc. Typically urban shoppers and college students have limited availability of space, so they need a device that is compact and storable.

Mission Statement *(By David DeRosier)*

If people had a foldable shopping cart, they could easily move all of their purchases back to their apartment or dorm room, stress free. It would be able to carry all of the things that they would want to buy, including clothes, groceries, and even heavier items, such as multiple cases of water. For this reason, the mission of the design team was to research, design and develop a prototype for an affordable, quality, and convenient foldable shopping cart.

Design Specifications *(By David DeRosier)*

1.) The foldable shopping cart should be easy for everyone to use.

2.) The foldable shopping cart should help people transport things that they would buy, such as groceries.

3.) The foldable shopping cart should be easy to store when it is in the folded position.

4.) The foldable shopping cart should be able to be manufactured with $50 or less of building materials, unless a higher cost can be justified.

5.) The foldable shopping cart should be able to carry a load of at least 100 pounds.

Gantt Chart *(By David DeRosier)*

The following timeline was implemented whilst researching, developing, and prototyping the shopping cart design.

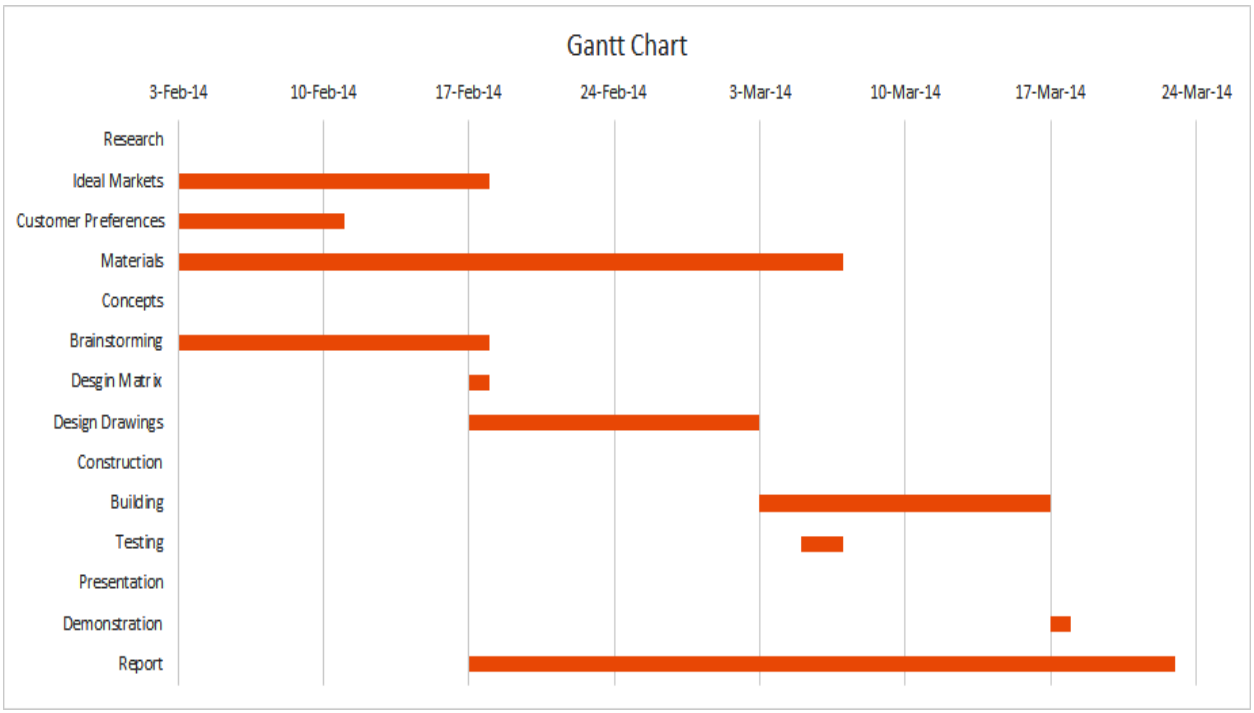

Gantt Chart (Figure 1)

Customer Needs Assessment & Market Data[1] *(By Yuvraj Rathore)*

In order to effectively address our design problem and develop a unique prototype, much attention was devoted to assessing the needs of the consumer. As mentioned previously, the people most likely to rely on a foldable shopping cart are typically urban shoppers, as well as college students, who typically may not drive,

1. http://goo.gl/Cu7SVI

nor have enough space at home. Because of this, these particular demographics were chosen as the target market for this design. When gathering information (ratings, reviews, comments, etc.) on retail websites like Amazon and WalMart, several criteria stood out. Many customers mentioned ease of use, size & weight, the quality of the product, ease of maintenance, mobility, capacity, as well as convenience (i.e. features) as the most important attributes in a foldable shopping cart.

By using this criteria, it was determined that the foldable shopping cart should be designed with swiveling wheels, quality, yet lightweight materials, and adjustable handles (to allow people of different heights to use the product). Most importantly, the shopping cart must be easy to fold and compact when in storage.

Concept Generation *(By Yuvraj Rathore)*

With customer needs in mind, each group member developed a unique design concept that included the previously mentioned criteria. Among these four designs included a shopping cart that doubled as a table, and two other designs that doubled as a dolly cart. Additionally, one design functioned exclusively as a foldable shopping cart, and nothing else. As shown in the design matrix (Table 1), the merits of each concept were compared/contrasted, as well as the drawbacks. A foldable shopping cart that also functioned as a table would be quite convenient, especially for barbecues, tailgates, or for use within small apartments. However, stability,

practicality, and ease of use were in question, therefore this design was deemed unsuitable.

Regarding the design that just functioned as a shopping cart, and nothing more, it was decided that the design should include some degree of extra functionality; some unique feature. The task was to design a shopping cart that people would *want* to buy; something that stood out from the rest of the market. For this reason, the dolly design was chosen. Although it had some drawbacks (e.g. weight), the dolly design proved most practical to our target market-- urban shoppers and college students. A dolly design would allow consumers to not only transport groceries, but also move large boxes, equipment, and even furniture. This is incredibly convenient for people living in apartments, or college students who regularly have to move in and out of dorms. The merits of both designs C and D (Table 1) were assessed and eventually, it was decided that Design C would be pursued. It's important to note, however, that features from the other designs were incorporated into Design C as well.

Design Selection Matrix *(By Daniel Cordova)*

By comparing and contrasting both the merits and drawbacks of each concept, the design that best addressed the problem was chosen. A "+" symbol conveys exceptional performance in the category, while a "-" shows unsatisfactory performance. A "0" conveys indifference. All figures are relative to the reference cart (see Figure 3).

Table 1. Design Selection

Selection Criteria	**Designs**				
	A Folding Shopping cart with table	B Normal Shopping cart	C Shopping cart/Dolly (Daniel)	D Shopping cart/Dolly (Yuvraj)	Reference (Shopping cart from Amazon)
Ease	-	-	+	+	0
Size	0	+	+	+	0
Quality/durability	0	0	+	+	0
Safety	-	0	0	0	0
Maintenance	+	+	+	+	0
Capacity	+	0	+	+	0
Features	+	0	+	+	0
Total plus	3	2	6	6	0
Total zeroes	2	4	1	1	7
Total minuses	2	1	0	0	0
Net score Rank Proceeds?	1 3 Combine	1 4 NO	6 1 Combine	6 2 Combine	0 5 NO

Design Selection Matrix (Table 1)

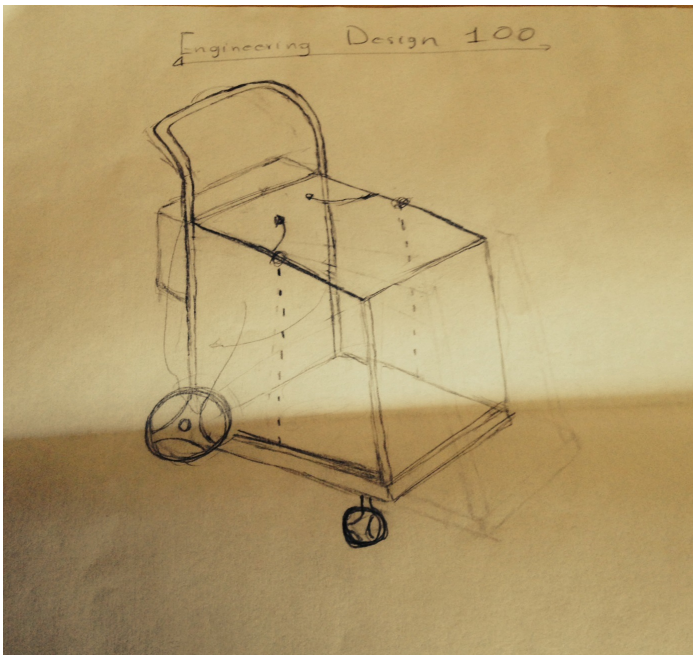

Preliminary Sketch of Design C (Figure 2)
(Drawn By Daniel Cordova)

Reference Shopping Cart *(amazon.com)* (Figure 3)

Design Parts & Drawings *(By Kevin Wang)*

The prototype contains fourteen major, nonstandard parts.

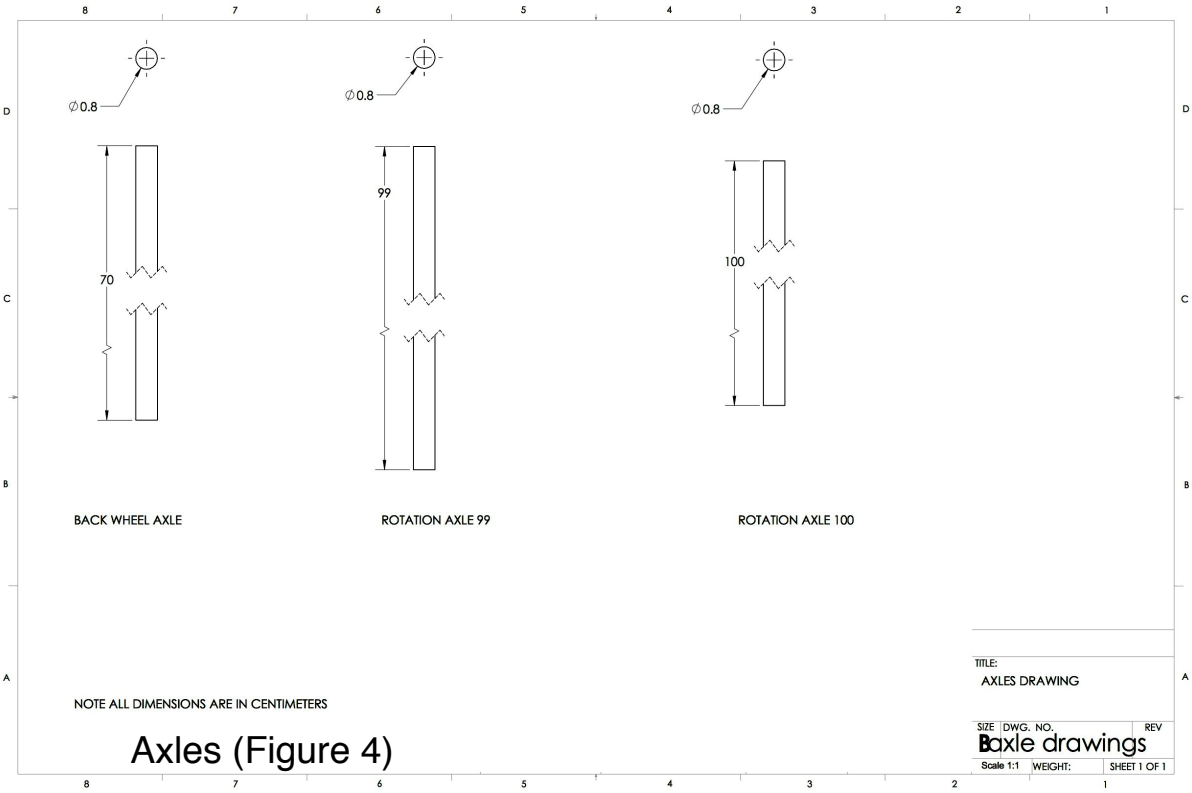

Axles (Figure 4)

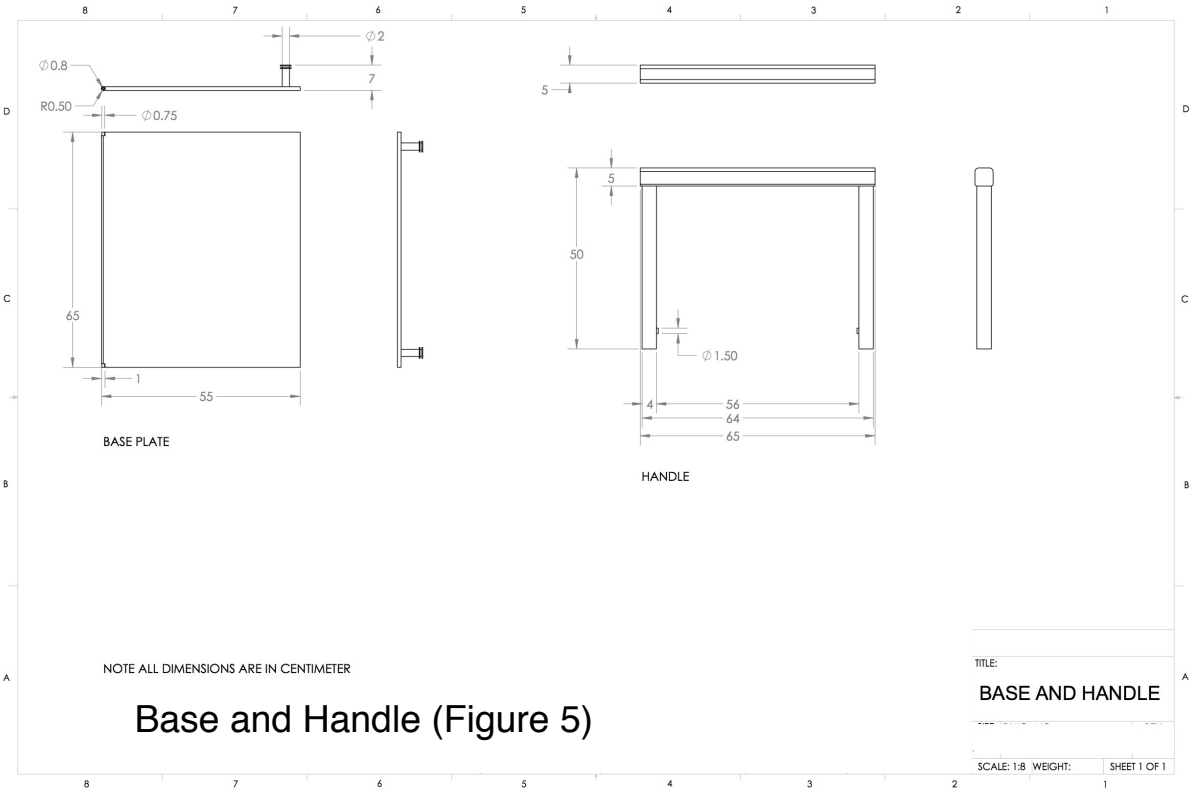

Base and Handle (Figure 5)

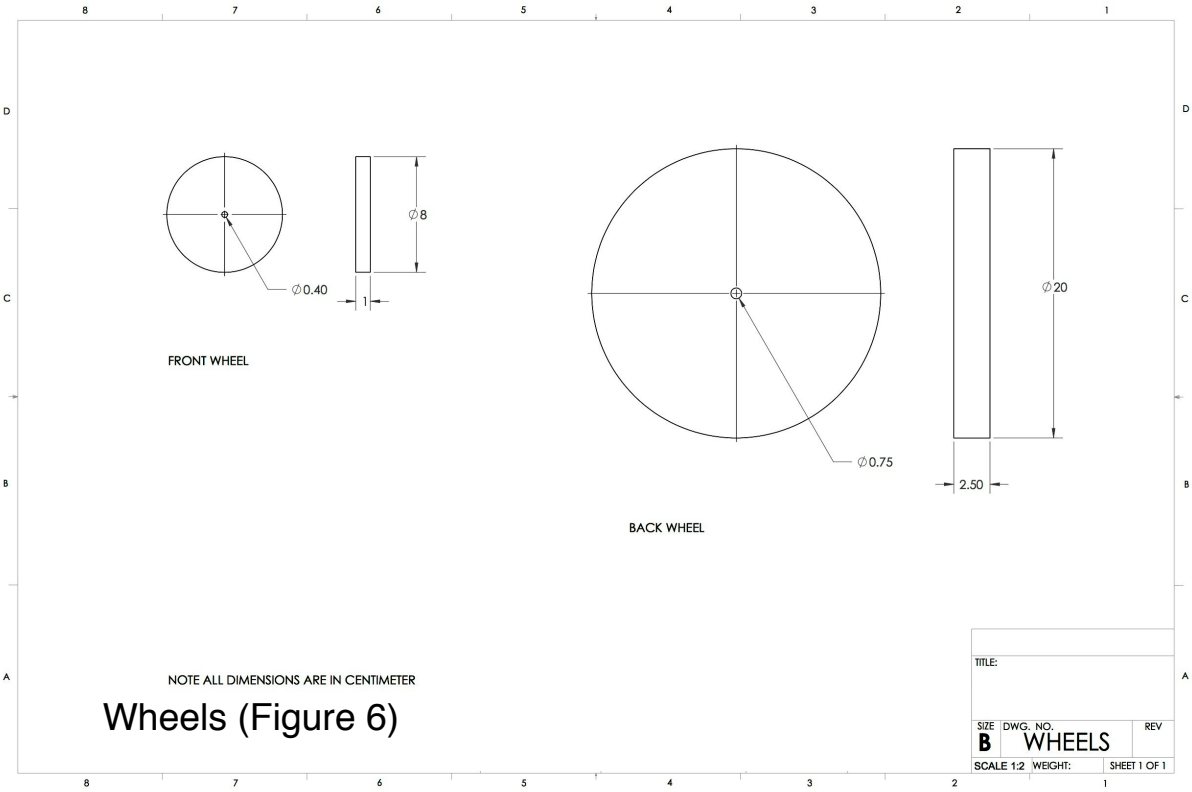

Wheels (Figure 6)

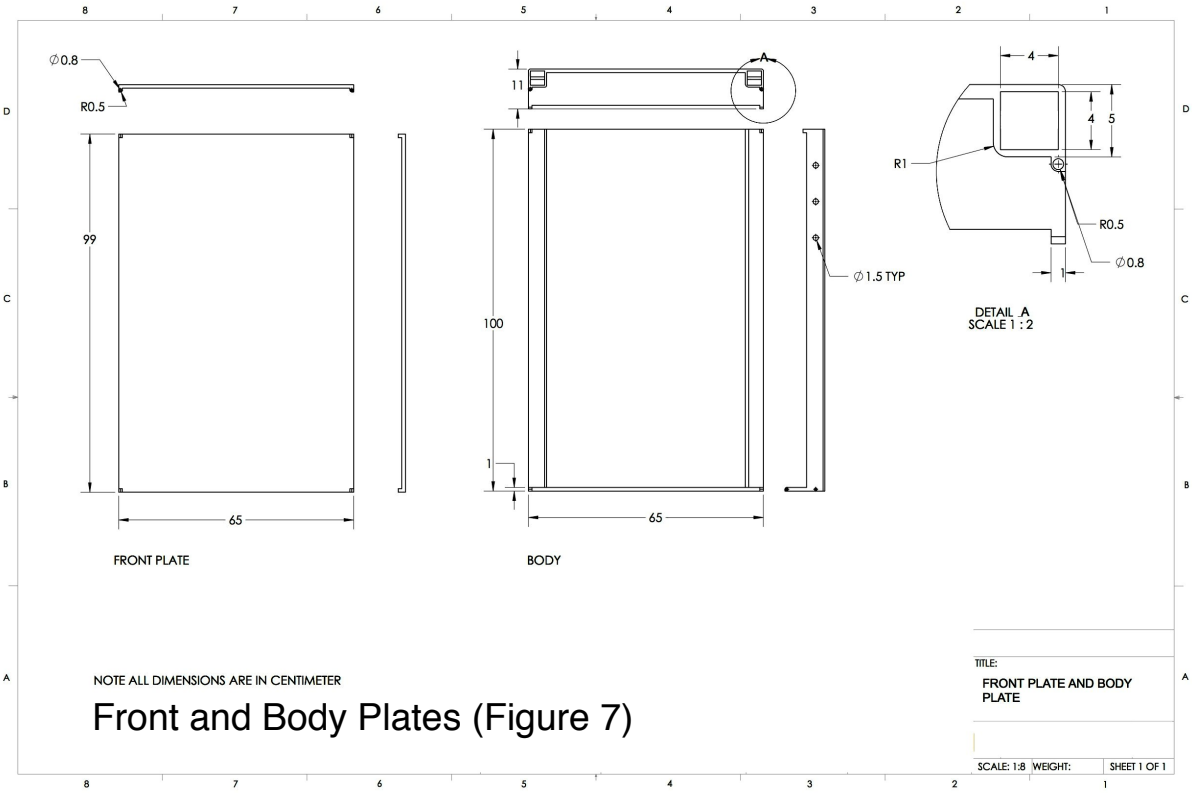

Front and Body Plates (Figure 7)

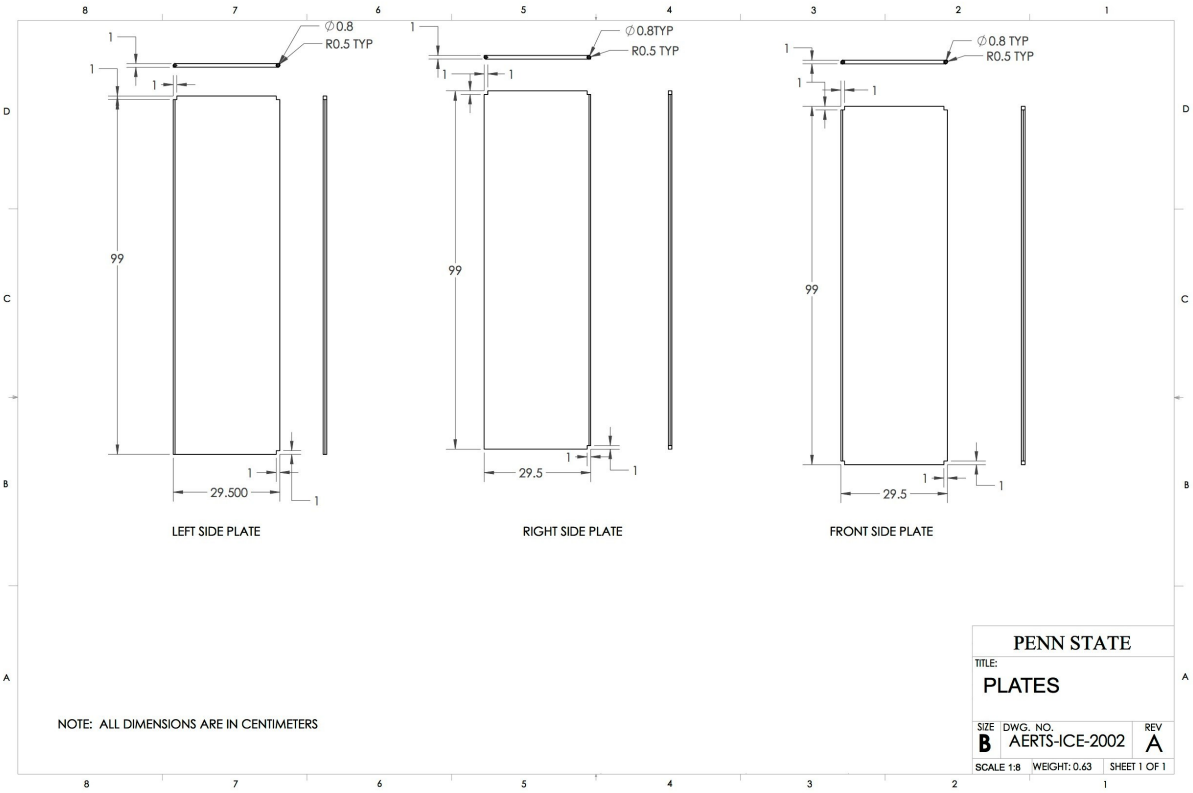

Side Plates (Figure 8)

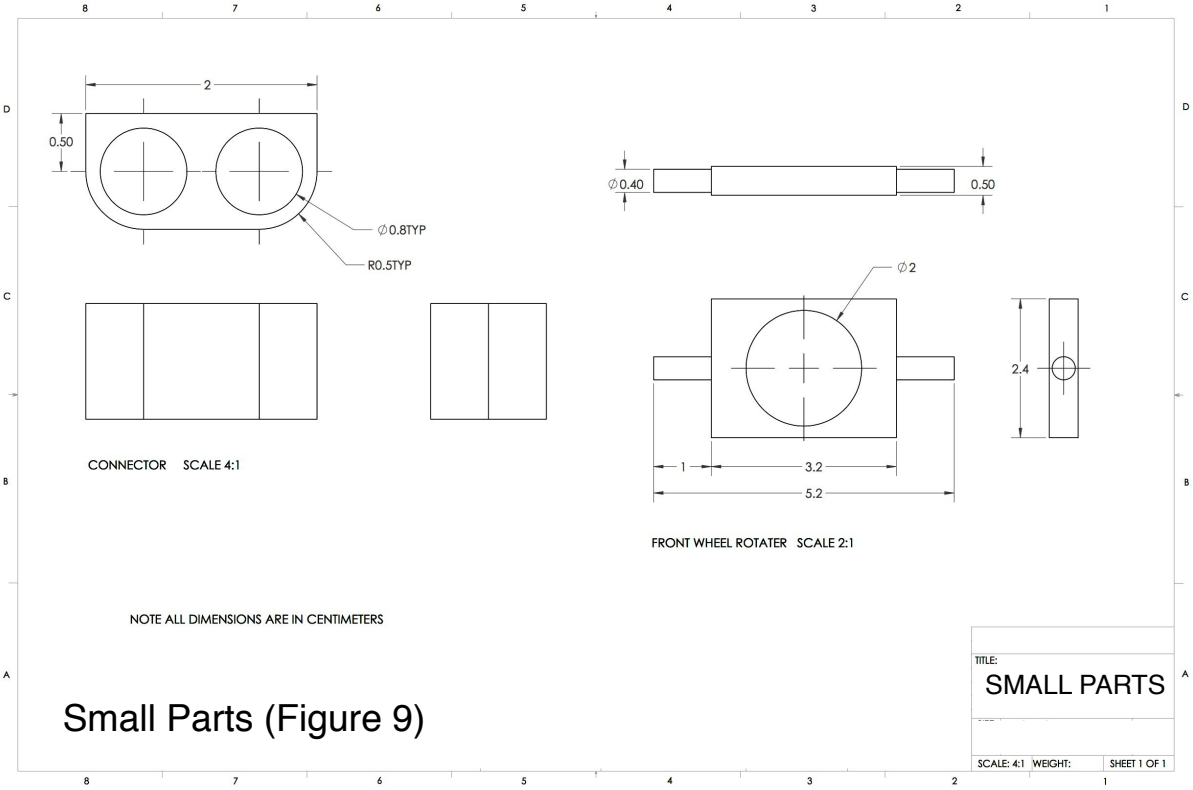

Small Parts (Figure 9)

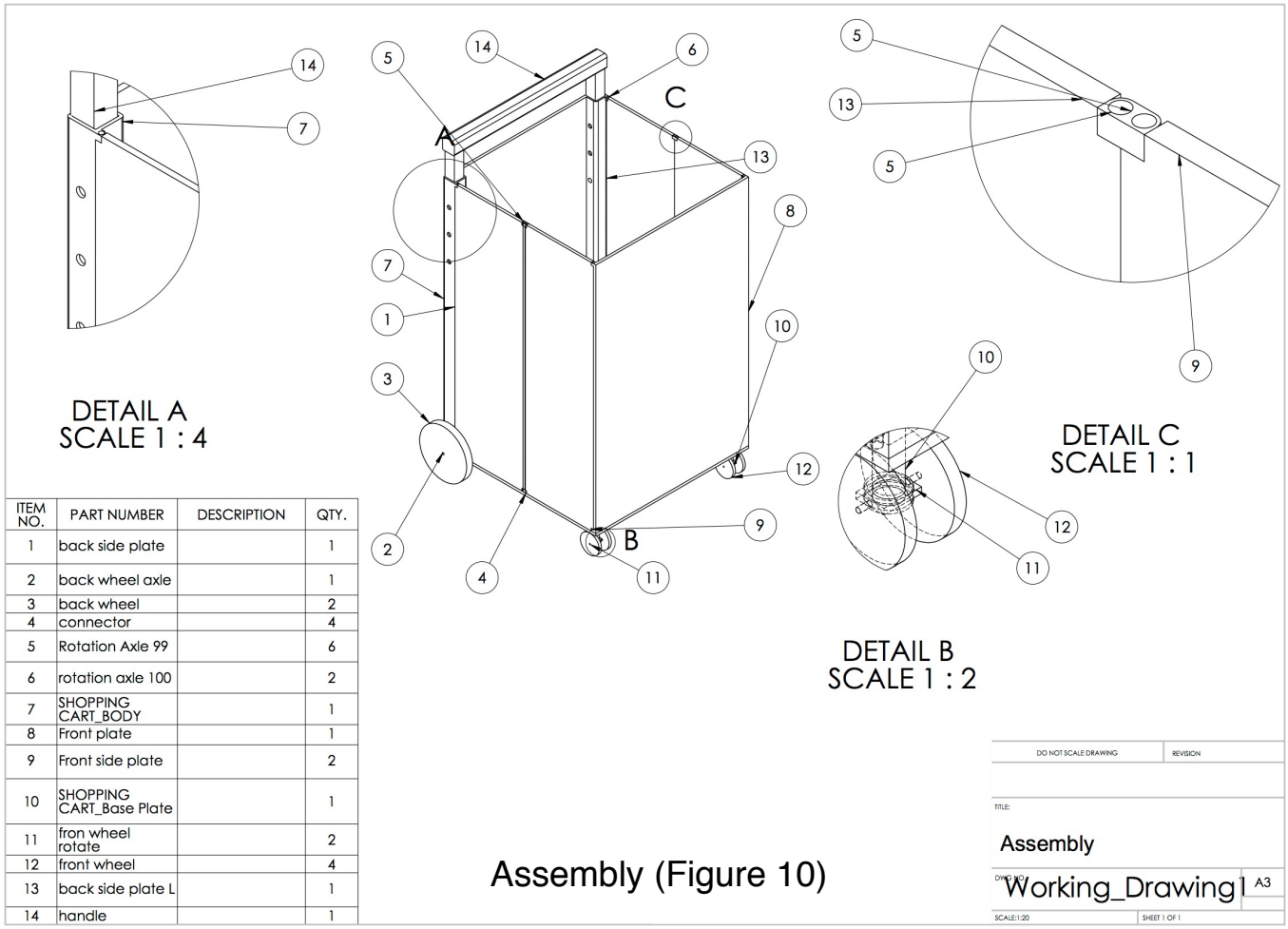

ITEM NO.	PART NUMBER	DESCRIPTION	QTY.
1	back side plate		1
2	back wheel axle		1
3	back wheel		2
4	connector		4
5	Rotation Axle 99		6
6	rotation axle 100		2
7	SHOPPING CART_BODY		1
8	Front plate		1
9	Front side plate		2
10	SHOPPING CART_Base Plate		1
11	fron wheel rotate		2
12	front wheel		4
13	back side plate L		1
14	handle		1

Assembly (Figure 10)

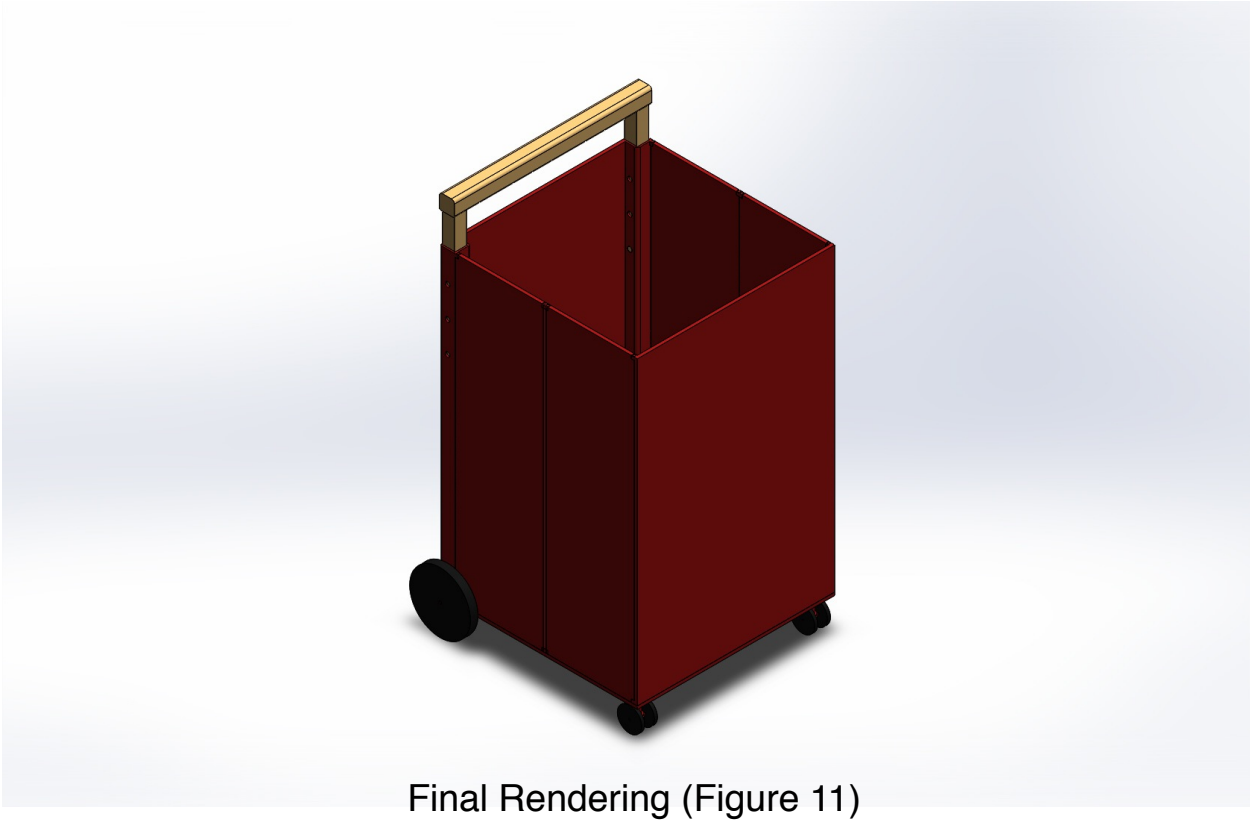

Final Rendering (Figure 11)

Design Features & Instructions *(By Yuvraj Rathore; Photos by Kevin Wang)*

The prototype was developed with convenience, practicality, and ease of use in mind. It contains several unique features that allow it to be an easy to use, compact shopping cart and dolly cart. Some features include swiveling front wheels (for ease of maneuverability), compact storage, adjustable handlebars (for people of different heights), and a small basket to store a phone, cup/drink, or shopping list, for example. Best of all, the device is simple to use— simply load the shopping cart when in use and push it to move it. To store it, simply push down on the front plate, and fold up the base plate. For dolly mode, leave the base plate out.

Shopping Cart Prototype (Figure 12)

Fully Collapsed for Storage (Figure 13)

Partially Collapsed for Dolly Mode (Figure 14)

Figure 15

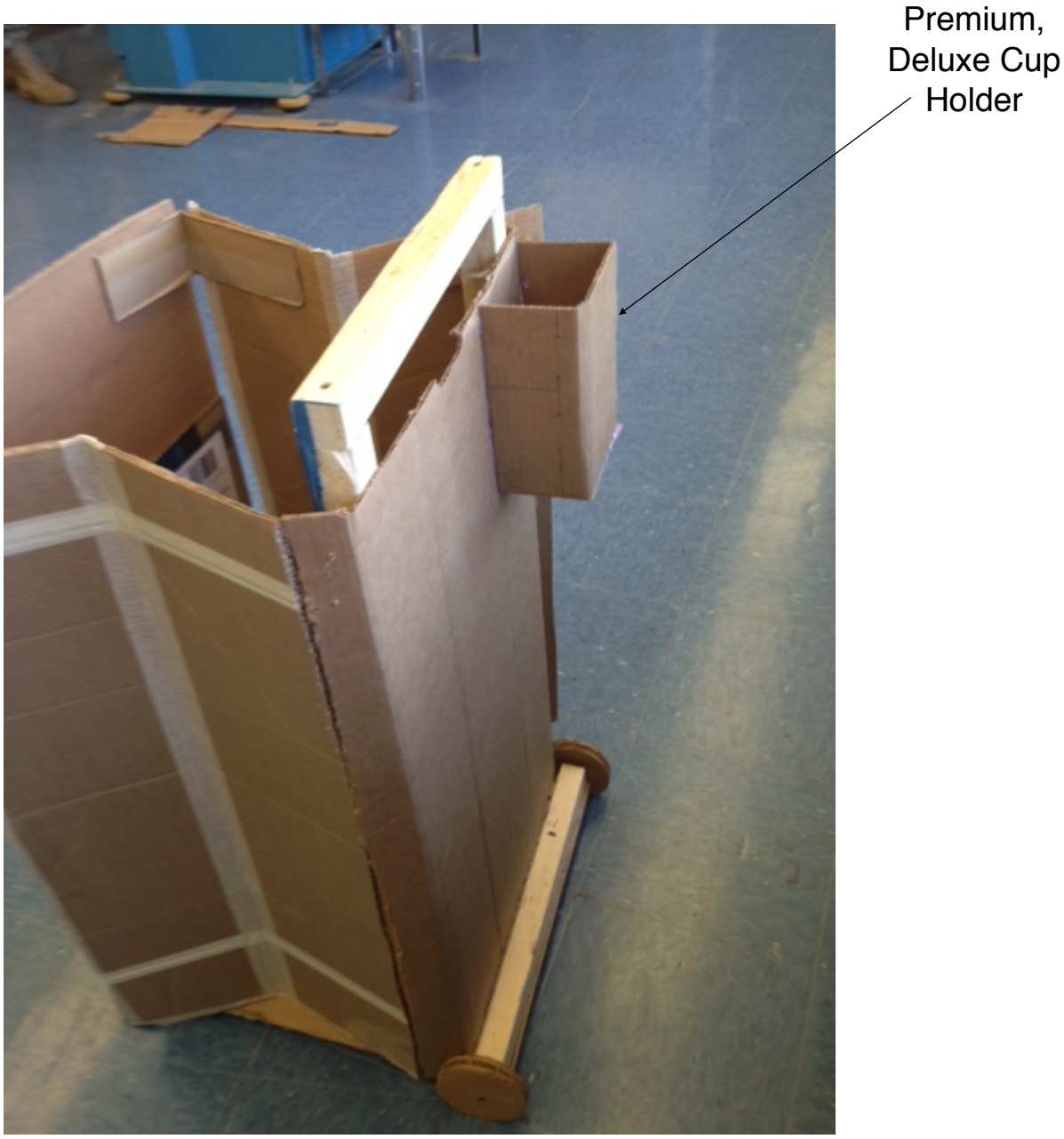

Rear View (Figure 16)

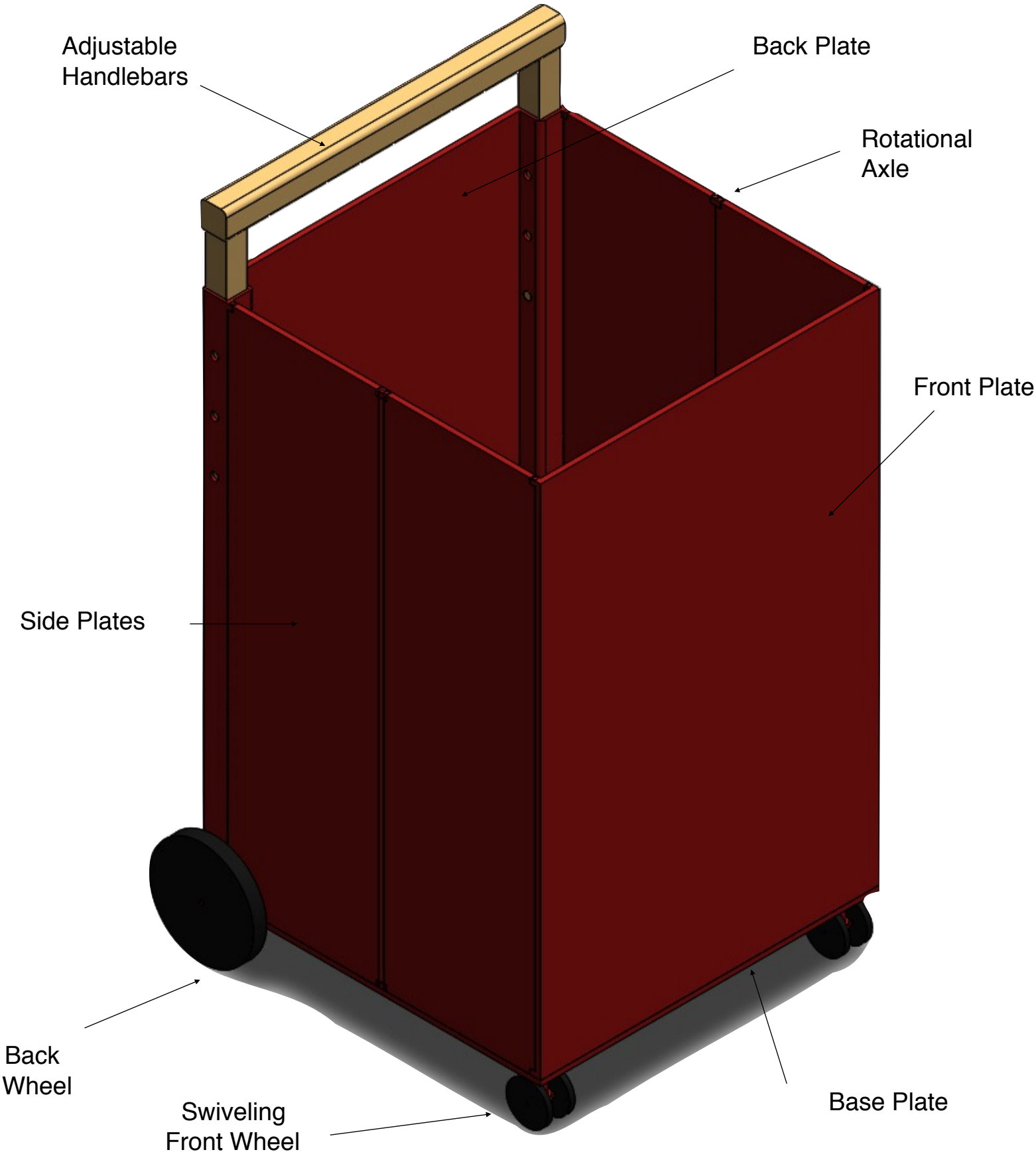

Labeled Rendering (Figure 17)
by Kevin Wang

Working Mechanism *(By Yuvraj Rathore)*

As stated previously, the foldable shopping cart with a dolly is designed to be simple to use, as per the criteria. Four, high quality rubber wheels allow it to maneuver easily on a variety of surfaces as the user pushes it. The design has adjustable handle bars, that can be "clicked" into place. The user pushes in the buttons (notice the holes in Figure 7) and slides the handles either up or down. Lastly, the cart has the ability to collapse. The front face is supported by two side plates on each side, which connect it to the back plate. These two side plates are connected by a rotational axle (see Figure 17), which allows them to rotate, causing the sides to collapse inwards and lock. The base plate can either stay in place (if the user wishes to use it as a dolly), or be folded upwards (see Figure 13).

Cost Analysis *(By David DeRosier and Yuvraj Rathore)*

One of the goals of this project was to develop a cart under $50. The cart must be affordable to the target markets outlined previously. However, the cart must also be able to have a capacity of at least 100 pounds, however, a factor of safety mandates that figure be increased. Additionally, it needs to be operable over a wide variety of surfaces— roads, sidewalks, wet/dry surfaces, etc. For these reasons, high quality, high strength, and waterproof materials were chosen, especially for the base plate and wheels, which experience most of the load. Also,

perforated plastics were chosen to reduce the weight. The following chart outlines the materials for the most critical parts, as well as their respective costs:

Part	Quantity	Price (USD)
Tenax Black Hex Fence (Sides)	12,000 cm^2	3.26
Hard Rubber Back Wheels	2	11.98
Hard Rubber Swivel Front Wheels	2	6.58
Impact Resistant Polycarbonate (Back Axle)	1	3.00
Impact Resistant Polycarbonate (Front Axle)	1	3.00
Polycarbonate Perforated Plastic (Front Plate)	1	8.22
Polycarbonate Perforated Plastic (Back Plate)	1	8.22
3/16" A36 Steel plate (1'X1')	1	9.65
2" thick, hollow Aluminum beam (Handle bars)	1	7.00

The resulting total is $60.91, which is a bit over the original constraint of $50. However, it can be argued that because of the importance of strength, durability, and the quality of materials, this 20% cost increase can be justified. Moreover, this design has two products in one: a shopping cart *and* a dolly!

Summary and Conclusions (*By Daniel Cordova and Yuvraj Rathore)*

The first step in the design process was to brainstorm and come up with ideas on how to produce the most reliable and convenient folding shopping cart design, while still following the task's constraints. As mentioned before, the targeted market was people living in apartments, urban shoppers, and college students. The idea was to make a folding shopping cart easy to use, easy to store, and reliable. Overall, because of the implementation of the engineering design process, the final design effectively meets the requirements and criteria.

Of course, however, the design and prototype are mere models— they have yet to be implemented in the real world. With more extensive testing and marketing to understand customer needs, perhaps a better design can be developed. Sometimes, there is no other way to know how a design will perform until it is deployed and commercialized into the marketplace. That being said, the concept in this paper, although imperfect, would be very useful to many consumers.

By doing this project, a greater, in-depth understanding of the design process and the jobs of engineers was gained. It was learned that it takes more than a simple idea to produce a design— it takes communication, research, and leadership. The team had a taste of what it takes to be an engineer.

Acknowledgements (*On Behalf of Everyone*)

We would like to extend our sincere thanks to our professor, Dr. Xinli Wu, of the Pennsylvania State University, as well as teaching assistants Benjamin Szoch and Ryan Kelly for their support.

Works Cited

Amazon (2014), "Folding Shopping Cart - Transport up to 120 Pounds." Amazon.com. Web. http://www.amazon.com/Folding-Shopping-Cart-Versacart-Water-Resistant/dp/B000LPFUG8/ref=sr_1_2?ie=UTF8&qid=1395608389&sr=8-2&keywords=FOLDABLE+SHOPPING+CART

Metals Depot (2014), "MetalsDepot® - A36 Carbon Steel Plates." metalsdepot.com. Web. http://www.metalsdepot.com/products/hrsteel2.phtml?page=plate&LimAcc=%20&aident=

Sorensen, Jodi (2013), "How to Create a Gantt Chart in Excel." SmartSheet.com. Web. http://www.smartsheet.com/blog/gantt-chart-excel