Project 2 Final Report

Randall Gough
Kelci Knepp
Matt DiSanto
Nick Hedge

12/17/12

Team 1

Abstract

Our objective is to design a bike shelf that better fit the needs of street vendors and even the everyday bike rider. We surveyed 14 people to better understand the customer demand. From the surveys, we concluded that many customers were concerned with cost, adaptability, safety, and ease of use. One of our main goals will be to keep our bike shelf safe for the rider to assemble, ride with, and use. The second most important factor to our customers was adaptability. We will design our product in a way that it will have the ability to be successfully used on almost any type of bicycle. Storage space was another important factor we noticed from our surveys. We will need to estimate the average load that a usual customer would have and base the storage space off this data. Although cost was an important factor to the customers, many said that they would pay more for a bike shelf that met their requirements. This allows us to make the changes necessary without worrying so much about cost. Other changes such as appearance and weight were not a great concern to our customers. We will make few changes to these characteristics but still keep them in mind in our design process. The changes we will make to our shelf will focus mainly on safety, adaptability to other bicycles, and ease of use. Although price was not a main concern of the customers we will also try to maintain the cost at a low price.

1.0 Introduction

Our task is to develop a collapsible shelving system for a bicycle which could be used as both a shelf and table. We started this project by doing research on the internet to get a clearer idea of what we were designing. The first thing we did was create a customer survey so that we could get a better idea of what consumers are looking for in our product. We interpreted the results of the survey, using PPC and AHP charts, and then used the data to revise our problem statement. We then did external searches of the past history of the product, useful patents for our product, and other products in the same market. Using the information we got from consumers and what we found in our external search we developed concepts for our product.

1.1 Initial Problem Statement

Our task is to design an addition to a typical bicycle which is a collapsible shelving system that the consumer can use as a table. This design will be used by street vendors and the typical bicycle rider. It will be a modified and more flexible and versatile version of a street vendor cart or the street vendor tricycle.

2.0 Customer Needs Assessment

To greater understand our customer's needs we developed a survey. The survey included questions that asked the customer to rate certain characteristics of the shelf that were important to them. Based off these answers we could better understand what our customers were looking for. Our survey also helped us to develop a better understanding of who would be using our product and what it would be used for most. We also asked customers the types of bikes they used so we could design a product that was adaptable for most models of bikes.

2.1 Weighting of Customer Needs

The results from our surveys helped us to make our Pairwise Comparison Chart and an AHP chart that displayed our customer's needs. We first narrowed the customer's needs to the more important ones by making a Pairwise Comparison Chart. We then took these results and used them in an AHP chart. The AHP chart helped us to determine the weighting of each customer need. This weighting is important in our design process because it shows us the features we should focus on the most and what is important to our customers in the design.

Table 1. Initial Customer Needs List Obtained from Team Focus Group

A	Size
B	Cost
C	Weight
D	Mobility
E	Ease of Use
F	Ease to Install
G	Storage Space
H	Safe
I	Appearance
J	Adaptability

The characteristics in Table 1 are the initial characteristics we found that customers were concerned with. To shorten this list to the most important ones we first completed a Pairwise Comparison Chart that can be seen in Figure 1.

Evaluated	A	B	C	D	E	F	G	H	I	J	Total
A	X	0	1	-1	-1	-1	-1	-1	0	-1	-5
B	0	X	1	-1	-1	-1	1	-1	1	-1	-2
C	-1	-1	X	-1	-1	-1	-1	-1	-1	-1	-9
D	1	1	1	X	1	0	0	-1	1	0	4
E	1	1	1	-1	X	0	0	0	1	0	3
F	1	1	1	0	0	X	0	-1	1	0	-1
G	1	-1	1	0	0	0	X	-1	1	0	1
H	1	1	1	1	0	1	1	X	1	1	8
I	0	-1	1	-1	-1	-1	-1	-1	X	-1	-6
J	1	1	1	0	0	0	0	-1	1	X	3

Figure 1. Pairwise Comparison Chart

From the Pairwise Comparison Chart we found the characteristics that seemed to be most important. These were the characteristics that ranked higher in the total column. We used the top 5 characteristics in the AHP chart. The AHP chart helped us to find the weightings of these characteristics in our design.

	Mobility	Ease of Use	Storage Space	Safe	Adaptability	Total	Weighted
Mobility	1	3	3	0.2	3	10	0.21
Ease of Use	0.33	1	0.33	0.2	0.2	2.06	0.04
Storage Space	0.33	3	1	0.2	0.333	4.863	0.1
Safe	5	5	5	1	5	21	0.44
Adaptability	0.33	5	3	0.2	1	9.53	0.2
Total						47.453	

Figure 2. AHP Pairwise Comparision Chart to Determine Weighting

Table 3. Weighted Hierarchal Customer Needs List Obtained from Focus Group and Individual Interviews

1. Mobility (.21)
2. Ease of Use (0.04)
3. Storage Space (0.1)
4. Safe (0.44)
5. Adaptability (.2)

The characteristics in Table 3 are the results of the AHP chart. These show the weighting that these characteristics will get when we are considering the concepts of our design.

3.0 Revised Problem Statement

According to our survey results and the weighting from the results of our AHP chart we have found the characteristics our model will focus on. Our first is mobility. We will want to keep the shelf light in weight and small enough for the rider to still have complete control over the bicycle and that it won't affect the ride of the bicycle. Another characteristic we will focus on is ease of use. We will want to construct it in a way that will be of little difficulty for anyone with no training to set up based off basic directions. Storage space was also important because depending what the costumer will be transporting it will need to have sufficient size. Safety was another important issue we will not want to undermine the safety of the rider just so they will be able to carry more items or set up a bigger table. Adaptability was another key factor the customers were concerned with. We will design the product to be able to work with many different types and models of bicycles.

4.0 External Search

To better understand the product we are designing we did background research, a patent search, product archaeology, and benchmarking with other products that are similar. Because there are few products that compare to this we compared it to other similar accessories used for bicycles. This helped us to develop our designs and concepts and to better understand what our design should include.

4.2 Patent Search

Table 6: Art-Function Matrix for Bike Shelf

FUNCTION		ART		
	Basket	Rear Mounted Rack	Collapsible Storage Shelves	Table with folding legs
Transport System	US8074852			
Attachment System		US20110132949		
Display Table			US 5131547 US5190171	
Support System				US5528997

Patent US8074852 is for a collapsible bicycle basket designed to be easily mounted using a pair of hooks and a flexible bungee cord. It is unlikely that we will use this method of securing our shelf or basket to the bicycle.

Patent US20110132949 is for a rear-mounted bike rack with an upright post that is storable when not in use. It is designed for grocery bags and features skirts to prevent them from hitting the rear wheel. We may end up using some of this patent, specifically the skirt and they method of attachment to the bicycle.

Patent US 5131547 is for a collapsible storage rack utilizing hinges to easily collapse the rack. It is designed to facilitate easy handling shipment and storage. We will be using ideas from this patent, particularly collapsible storage utilizing hinges, in our project.

Patent US5190171 is a multi-tiered collapsible storage rack made up of 2 shelves and further vertical framing. These vertical frames are tube shaped and attached in vertical sockets from which they can be removed. It is unlikely we will be using this particular design for making our storage unit collapsible; however we may still use some ideas from this patent.

Patent US5528997 is a folding table with a leg that can be folded out into a locked open position or a locked closed position allowing easier storage. We will likely use a similar locking system in the design of our product.

4.3 Product Archaeology

Street vendors have been around for centuries. There are reports of street vending in the 1300s in Cairo, along with ancient Greece and the ancient Aztecs. Today street vendors can still be found in major cities such as New York City and many other cities of foreign countries. All of these vendors have to had find a way to transport there products, set up an area to sell at, and then be able to pack it all back up and take it home at the end of the day. The original vending carts were small animal drawn carts. Today street vendors use a type of tricycle. Most of these tricycles have two wheels on the back. Between the two rear wheels there is a basket with a table top. This is where the street vendors sell and transport their products. We want to base our design off of this idea. We must adapt it to be successfully and safely used on a bicycle. We have taken a few design ideas from this and will use it to generate the concepts for our design.

The first bicycle basket was invented in 1899 by J.M. Certain (Martin). It was a basket that connected to the handlebars and allowed the basket to hang from the front of the bicycle (Martin). Bicycles with these baskets on the front were known as parcel carriers and they were used to transport packages (Martin). Today many bikes used for transportation have a basket of some sort. Most are easily attached and sturdy. Based on the typical bike basket we have taken into consideration the attachment system of our design.

A more modern idea is the design that Jeriël Bobbe has come up with. It is a basket with pannier straps that is able to attach to a bicycle and carry all of the picnic essentials. This basket is also detachable and folds out into a small table for two with benches. There is a working prototype of this model but it has not been put on the market for purchase (Liszewski). It is not clear why he has decided to keep his model out of production but based of his design we will work to make our model more flexible and a simpler model that is easily assembled and attached.

http://gizmodo.com/5954918/basket-pannier-straps-a-portable-picnic-table-to-your-bike

4.4. Benchmarking

In the following benchmarking table, I compared 4 different carrying devices on the market. I compared them on twelve different criteria that we would consider in designing our bike shelf. I then ranked the products on a scale of zero to five (zero being the worst and five being the best) on how well they performed in these criteria.

Table 5. Benchmarking of Four Products

Feature	**Standard Wicker Bike Basket**	**Jeriël Bobbe's Springtime picnic basket (Picnic table)**	**Rear tire bike rack**	**Trailer**
Size	0 small	4 good size	2 small	5 huge
Weight	5 light	4 a little heavy	5 light	0 heavy
Mobility	5 small light	3 noticeable	5 small light	1 much harder to control less manuverability
Storage Space	0 small	4 good amount compact	2 small	5 huge
Storage Space to Size Ratio	0 can't hold enough	5 holds a lot for size	3 can hold some stuff and very small	2 holds a lot but very big
Ease of Use	5 not noticeable	4 little heavier	5 not noticeable	2 bulky hard to use
Easy to install	4 just clip on	3 attach to back wheel	4 attach to back wheel	2 connect to bike frame
Adaptability to Different Bikes	4 can be put on most bikes	4 can be put on most bikes	4 can be put on most bikes	4 can be put on most bikes
Appearance	3 looks fine	3 looks fine	3 looks fine	3 looks fine
Cost	4 cheap $10	3 little more expensive $50	4 cheap $20	1 expensive $200-$300
Safety	5 very safe	4 pretty safe unless heavy weight	4 pretty safe unless heavy weight	3 hard to control

Based on the results from the benchmarking we came up with some initial concepts for our Bike Shelf. We concluded that the size and weight of the standard bike basket was the best, but adaptability and ease of use were best for the rear tire rack. We also liked the picnic basket prototype. We came up with concepts combining these three ideas. We didn't like the bulkiness, cost, and size of the trailer so we dismissed that idea.

4.5 Design Target

Based upon the external research and survey results a design target for our product has been put together. We have designed a model of a bicycle shelf that can be collapsed and made into a table. Our design is flexible in its use. This was based on the results of our surveys. Many different types of people responded to our survey, showing us that it is a versatile product that can be used by many. It can be used in a city setting for the use of street vendors or it can be used for a picnic, to stop somewhere to study, or to just stop and rest. It is not designed for a specific market or user. It is a model that will be sturdy but not too heavy, efficient, and easily assembled and transported. These features were the ones we found that our customers would be the most concerned with. We found these results based off of our survey results. We have focused on these features in our designs and hope to choose one that will successfully meet all of the customer's needs.

5.0 Concept Generation

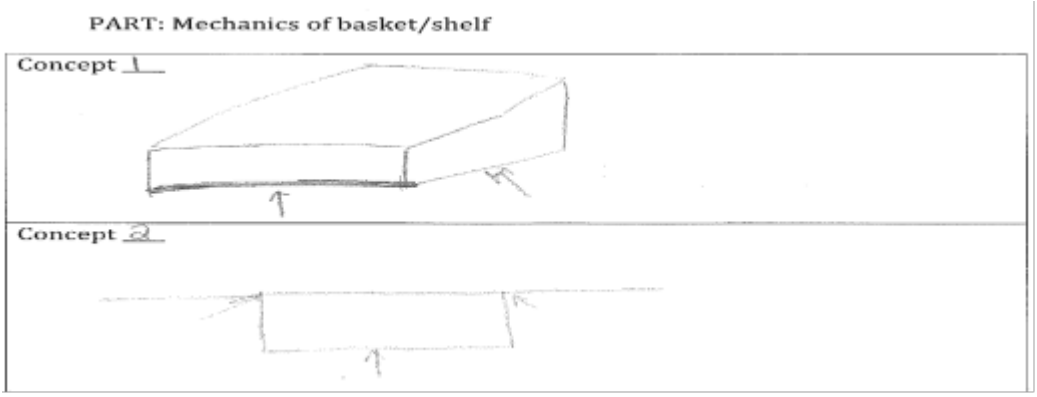

Concept generation 1 is a box with four sides and a lid. The lid has a hinge on one side and flips open to make the table top. There would need to be a brace inserted here or two supporting legs to hold the table top up. This concept would make sure that the products inside of the box were protected but it provides little table space for vendors to display their items.

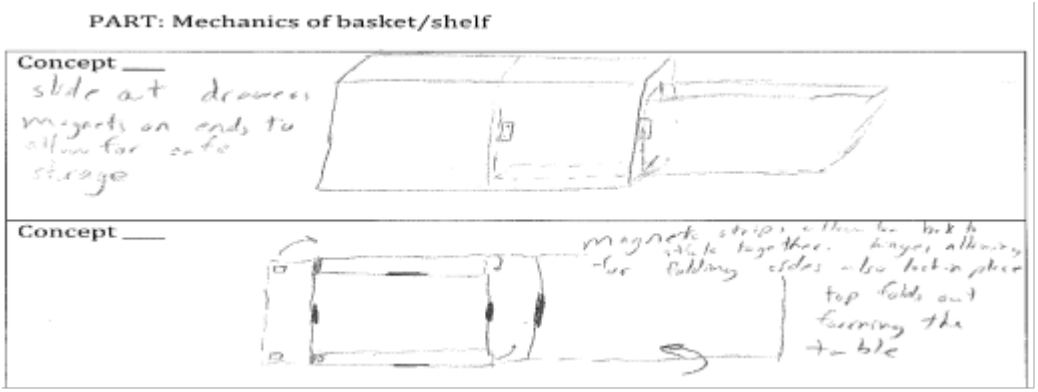

Slide out drawers the close and are held shut with magnets
Hinged sides that are connected and held up with magnets when a shelf, and lock into a table shape when unfolded.

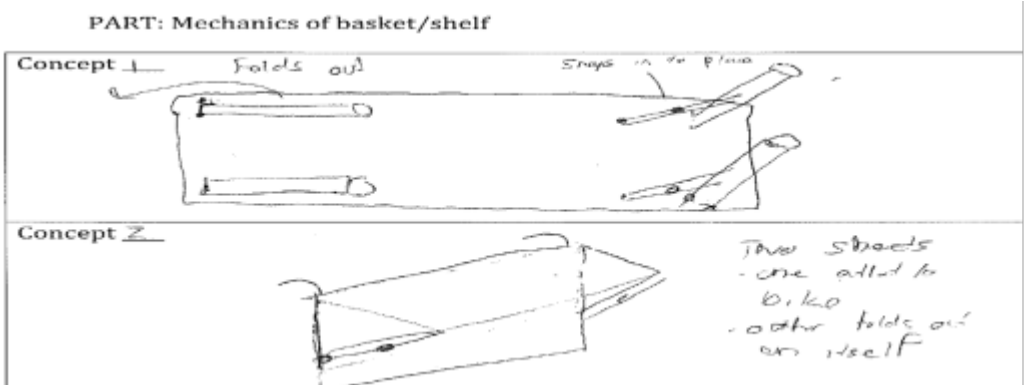

The first concept for the mechanics of the shelf shows the locking system for legs of the shelf. The system was similar to of a folding table, where the legs would lock once the two pieces became straight. This was not chosen because of a lack of space. Also legs were not chosen because of a lack of room as well, and would not be able to support much weight. The second concept is of a design about how to side shelf would operate. There would be two planes, one attached the side, and another on hinges attach to the first plane. The one plane would fold out from the plane attached to the bike then lock in place. This was not chosen because it was to complex, and not very mobile.

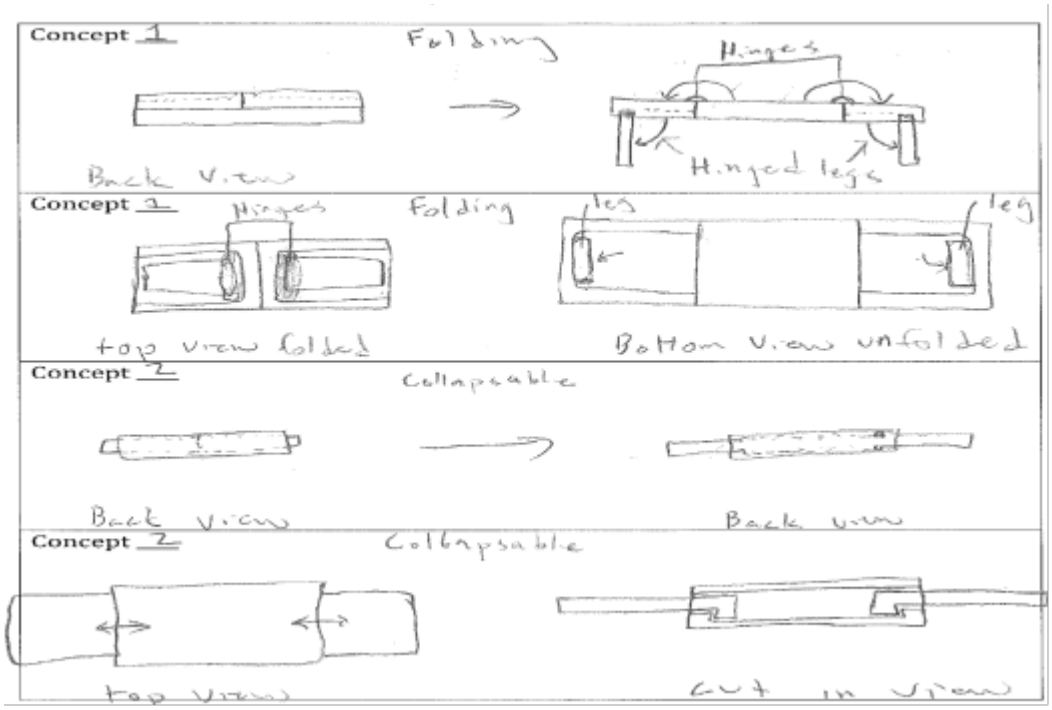

The first concept is of an attachment system for the legs. They are able to fold into the collapsible flap sides.

The second concept is the mechanics of how the folding flaps will collapse into the box. This concept shows the flaps retracting back into the base of the tabletop.

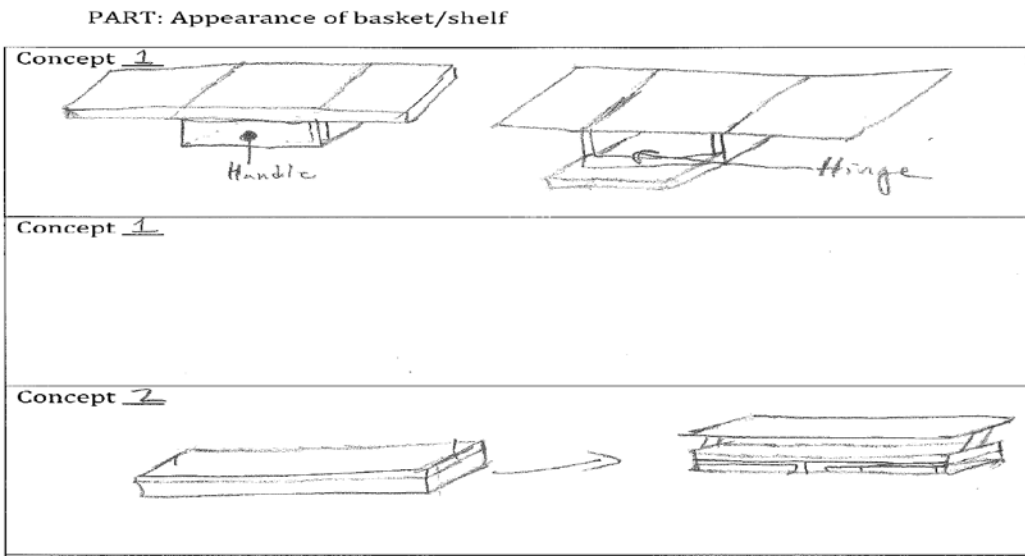

The First concept of the appearance of the basket and shelf has flaps that rise to increase table area. It also has a door that opens to the shelf for storage.

The second concept has a shelf with a tabletop that rises up on hinges in order for you to get into the shelf.

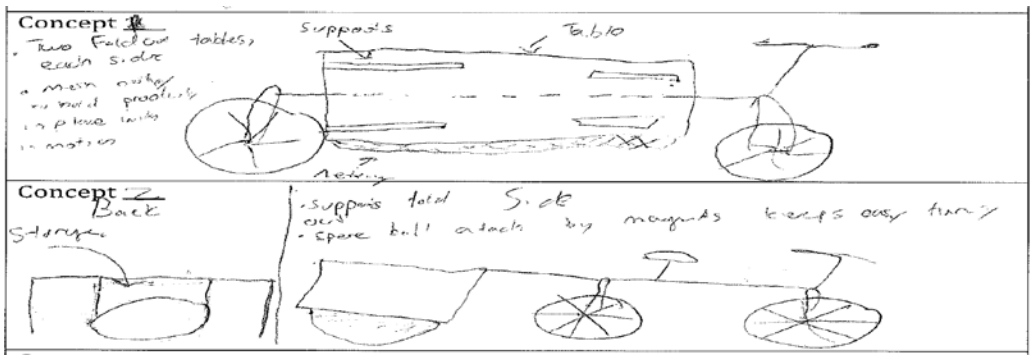

The first concept is a general design for a side shelf attachment. The bike would fold out from the side and four table legs would fly out and stabilize it. The other side of the shelf had a mesh netting to hold the vendors materials. This was not chosen due a lack of efficiency, cost, and mobility.

The Second Concepts is a behind the bike shelf concept. Rather than have the bike support the shelf, the shelf would have its own wheel. The table would then fold out two sides with legs that would support them. This was not chosen due to cost, but was very mobile.

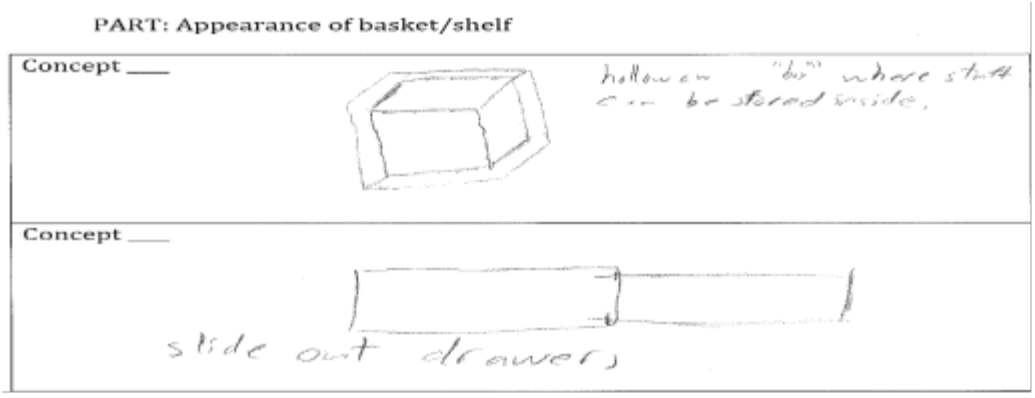

Hollow box, stuff is stored in the internal storage space, hinged sides can be made into a table.

Hollow box where stuff is accessible through a slide out drawer in the side.

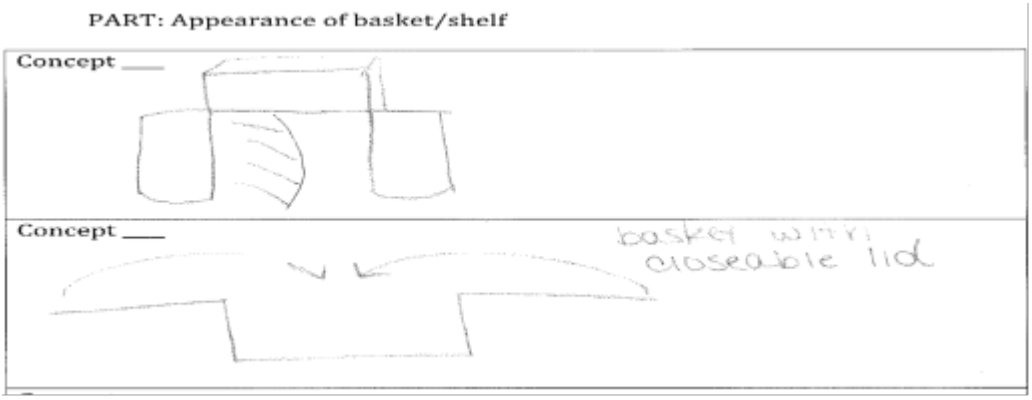

The top concept is a basket that has the table top being hinged to the bottom of the box and then laying straight down on either side of the wheel. The table would be supported by either braces or supporting legs. There is no lid to this basket.

The bottom concept is a basket that has a lid that is made up of two halves of the table top. The two halves of the lid fold out and make up the table top. It will be supported by either braces or supporting legs.

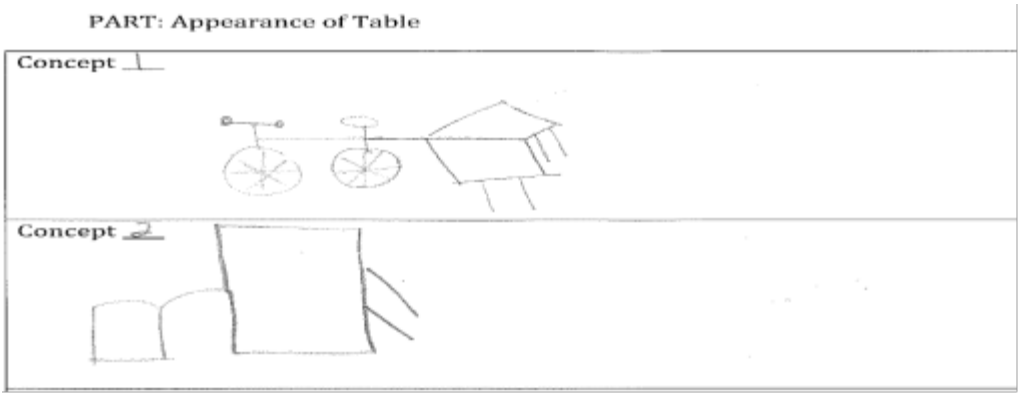

Concept 1 has a table top off the back wheel. It lays flat and has two supporting legs on each side of the table top.

Concept 2 has the lid hinged on one side of the basket. It flips open and out and makes the table top. The table top is then supported by two folding supporting legs.

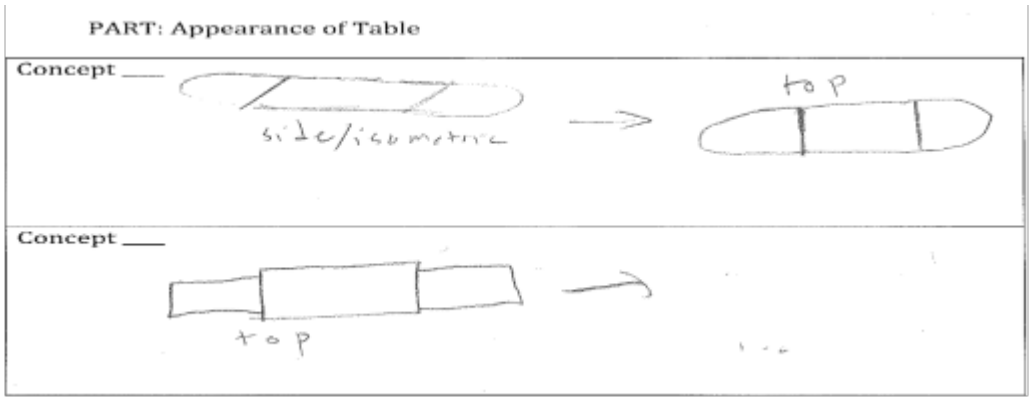

This concept is for the appearance of the tabletop. The concept has rounded table flaps that are rounded to give it more safety.

This concept for the appearance of the tabletop has rectangular flaps.

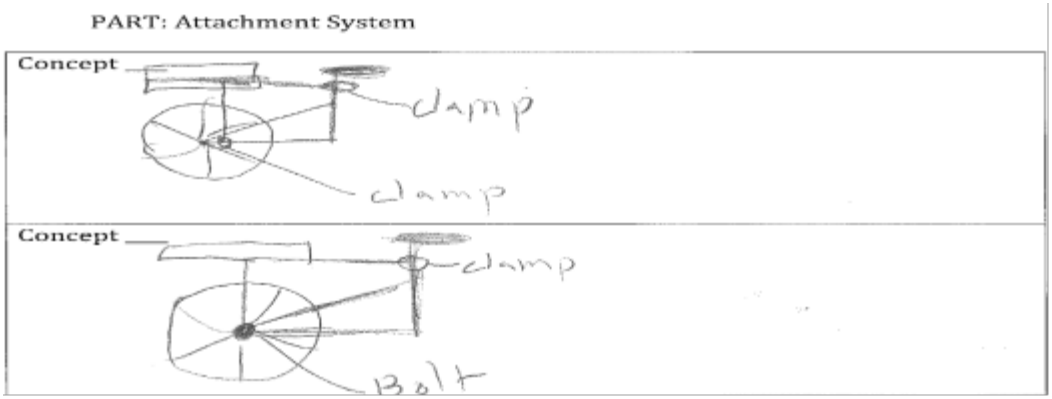

The first concept for the attachment system clamps onto the rear when and then clamps onto the seat.

The second concept has a clamp attaching the bike rack to the seat and a bolt attaching it to the rear wheel.

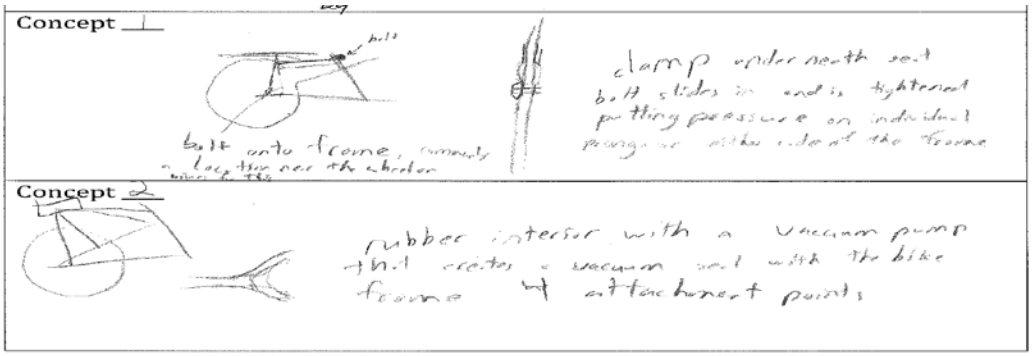

2 clamps that attach down near the wheel and under the bike seat

A clamp that attaches under the bike seat, and 2 bolted on points near the axel of the wheel

PART: Attachment System

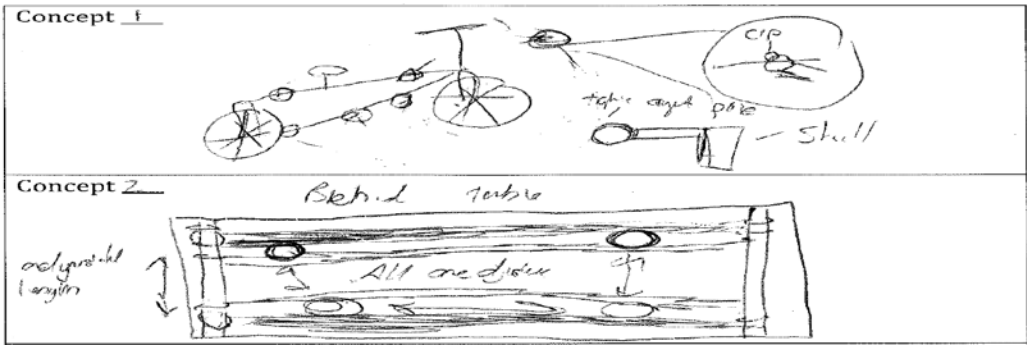

These two parts go hand and hand for the Attachment system. The first part of the system is the way it clips to the bike. Instead of being behind the bike, it attaches to the side in four places. This would allow for maximum stability along with space. The clip would open up and then the user would fasten it around the bars placed around the bike. The next Concept shows how the clamps would be attached to the bike. There would be two bars that went horizontal that would be able to change distance between each other vertical. Then the four clamps would be attached to the bar so that they could move freely horizontally. This setup would allow for adaptability. The problems with the design were it was not very mobile, cheap, and easy to use. Also the prototype that was used renders these options impossible

PART: Attachment System

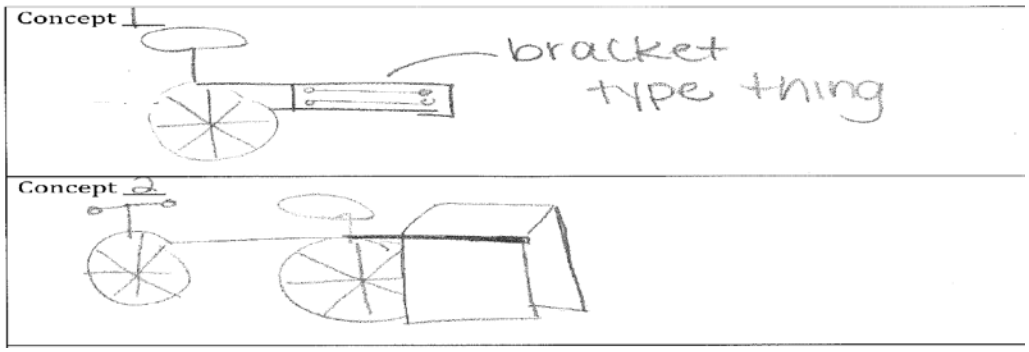

This attachment system is by using a premade universal rear wheel bike rack. The bottom panel of the basket is bolted to the bike rack and this is how the basket would be attached for the bike.

Table 6. Morphological Chart

Concept		Function			
	Table	Shelf	Collapsing	Attachment	Legs
1	Table top folds up off of the storage shelf	Basket on front	Hinged walls	Clamps to the frame over rear wheel	4 legged table fold in legs
2	Table top is formed by folding the top and sides down	Drawer slides out	Sliding table	Clamps and bolt to rear tire and frame over the rear wheel	4 legged table legs attached in the middle in an x
3	table top is formed by folding the table top in half and down	Attached to the back of the bike as a cart	Raising and dropping	Attaches to side of bike with clips	4 legs screwed into the table
4	Table top is formed by sliding out additional platforms from under the table top.	Rectangular box on rear wheel	Lifting like a school desk		

Table 6 shows the morphological chart of our top four concepts. This chart makes it easier for us to look at our different concepts and choose the combination that would be the most successful design. We separated our concepts into different components. These components are the mechanics of the table top, where the basket will be attached, how the lid will collapse and move, the attachment system to the bicycle, and how the legs will fold out or detach. We completed other data tables and other research to decide on our final concepts. The final concepts we chose for our design can be seen in the red text above.

6.0 Concept Selection

Table 7. Pugh Chart of the Mechanics of the Table

Data Input Pugh Chart based on Mechanics of Table							
Concept	Mobility	Ease of Use	Storage Space	Safe	Adaptability	Weight	Rank
Weight	0.21	0.04	0.11	0.44	0.2		
Legs X Fold	0	1	1	1	0	0.59	2
Legs Square Fold	-1	0	1	0	0	-0.1	3
Deatacble Legs	-1	-1	1	-1	1	-0.38	4
Swing out From Shelf	1	1	1	1	0	0.8	1

Table 7 is the Pugh chart of the mechanics of the table. We have weighted each characteristic based on what we think is most important for the mechanics of the table to contain in its design. Our results showed us that concept 4 would be the best concept for our design. In our final design we combined concept 4 with concept 3 to better our design.

Table 8. Pugh Chart of the Appearance of the basket/shelf

Data Input Pugh Chart based on Apperance of Basket/Shelf							
Concept	Mobility	Ease of Use	Storage Space	Safe	Adaptability	Weight	Rank
Weight	0.21	0.04	0.11	0.44	0.2		
Box	1	1	0	1	1	0.89	1
Tackle Box	1	1	0	1	0	0.69	2
Side Tables	-1	0	1	-1	0	-0.54	4
Third Wheel	-1	-1	1	0	-1	-0.34	3
Box inside Box	-1	-1	-1	-1	-1	-1	5

The Pugh chart labelled Table 8 is for the appearance of the basket. We set appropriate weights and did the rankings to find that concept 1 was the one with the highest weighting. When we were choosing our final design we came up with a whole new idea for this concept and ended up not using any of our original concepts from this chart.

Table 9. Pugh Chart of Attachment System

	Ease of Use	Safe	Adaptability	Durability	Cost	Total	Rank
Weighting	0.12	0.4	0.23	0.1	0.15	1	
1	-1	1	1	1	1	0.76	1
2	-1	-1	1	-1	-1	-0.54	6
3	1	-1	1	1	1	0.2	4
4	1	-1	1	-1	1	0	5
5	-1	1	-1	1	-1	0	5
6	-1	1	-1	1	1	0.3	3
7	-1	1	1	-1	1	0.56	2

Table 9 shows the Pugh chart we completed for the attachment system. This Pugh chart helped us in finding the final selection for the different concept generations we have sketched and come up with as a team. The different concepts

that correspond with the concept numbers can be found in the Concept Generation section of the report found above. The weightings of the different characteristics of the attachment system concept were based on what we thought was important for the attachment system to do. After completing this chart we found that concept number one was our best choice. This concept was based off the premade rear wheel bike rack attached to the bottom panel of the box.

Table 10. Pugh Chart of Appearance of the Table

	Ease of Use	Safe	Adaptablility	Durability	Cost	Total	Rank
Weighting	0.12	0.4	0.23	0.1	0.15	1	
1	-1	1	1	1	1	0.76	1
3	1	-1	1	-1	1	0	3
6	-1	-1	1	-1	-1	-0.54	4
7	-1	1	1	-1	1	0.56	2

This Pugh charts is based on the appearance of the table. The weightings for this are different than what they were for the attachment system. We think that it is very important for the table to be adaptable to other bicycles and also adaptable to different environments. After completing the tallying and ranking for the appearance of the table we found that concept one would be most successful for our design.

Table 11. Pugh Chart of Mechanics of Box

	Ease of Use	Safe	Adaptability	Durability	Cost	Total	Rank
Weighting	0.21	0.23	0.24	0.1	0.22	1	
1	-1	1	1	-1	-1	-0.07	2
2	1	-1	1	-1	1	0.34	1
3	1	-1	1	-1	-1	-0.1	3
4	1	-1	1	-1	-1	-0.52	4
5	1	-1	1	-1	-1	-0.52	4

7.0 Concept Improvement through Creativity Methods

To find the flaws and insufficiencies in our design we used a black-box model. The inputs we found that went into our design were human energy and the load of the products in the basket. One insufficiency we found in our design was the storage capacity. We wanted to be sure to make the basket big enough to hold a sufficient amount of goods but not so large that it would affect the riding ability and safety or the bicycle rider. For this insufficiency we decided that we would have to take the safety of the rider into more consideration than the storage capacity of the box. Another insufficiency the black-box model showed us was the ability to move the load from the box to the table. Our original design had a lid that lifted up instead of the sliding. This made it harder for the consumer to take the load from the box and successfully distribute it onto the table. With the ability for the lid to slide open and shut made it easier for the consumer to open and close the lid with products still on the lid. Another insufficiency that we considered in our design was the carrying capacity of the wood. After doing research and looking at some different types of wood we found that the material we planned on using in our model was strong enough to hold the average products that a street vendor would be selling.

Figure 3. Black-box model

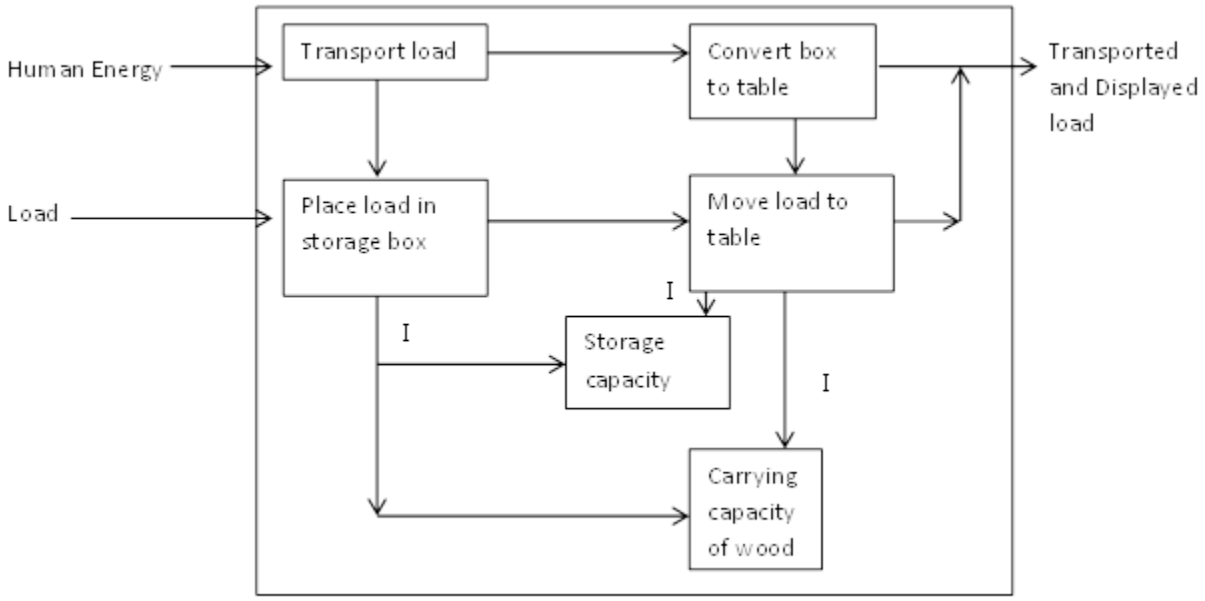

Table 12. TRIZ chart

Feature to Improve	Contradiction	Principles	Design Solution for Principles
Volume of Moving Object	Weight of Moving Object	A Separation or Extraction B. Copying C. Pneumatics or hydraulics D. Composite materials	1.A Reduce the size of the table top and increase the size of the box 2.B Use a rear wheel bike rack to attach the shelf 3.D Already using composite materials
Durability of Moving Object	Stability of Object	A. Other Way Around B. Local quality C. Physical or Chemical Properties	1.A Have table slide instead of lift
Stability of Object	Weight of stationary object	A. Copying B. Inert environment C. Segmentation D. Composite Materials	1.A Putting in a brace or support 3.C Adding legs to the table 4.D Making the supports or legs out of metal instead of wood

The TRIZ chart shown in the figure above takes into consideration the insufficiencies found from the black-box model. Using the data box that was provided for us, we chose the features that we needed to improve. These were the volume of the moving object, the durability of the moving object, and the stability of the object. With these features we were looking to improve also came the contradictions in the middle of the table. The contradictions were by trying to improve the stability and volume the object it would also be increasing the weight of the shelving unit. To keep the weight at a safe amount for the rider the TRIZ system recommended that we use composite materials, copying, and a few other principles. To improve the volume of the object we took the principle into consideration. We found that we could increase the size of the box and decrease the size of the table top. We would take the opinions of the consumers into consideration and decide which was more important to them. Another solution that was recommended was using composite materials. We had already incorporated that into our design so there was no more we could do with that. We also wanted to improve the durability of our product. We wanted to design a long lasting product for our customers. To do this we decided to eliminate the lifting element of the lid of our design. We instead changed it to a sliding lid which improves the durability and also the stability of the object. To improve the stability of the object we wanted to be sure not to increase the weight to an unsafe amount. We found that by putting a brace underneath the table top section it would make it a more stable space but not adding too much weight. We also found that by adding four detachable legs made out of aluminium we would be using composite materials to make the table a more stable space. We took these recommendations into consideration and incorporated them into our final design.

Table 13. SCAMPER design chart

Substitute	Combine	Adapt	Modify	Put to other use	Eliminate	Rearrange
Substitute aluminum instead of wood for the material used	Combine part of the table top as the lid	Make the basket table unit adaptable to all types of bicycles	Modify the shape of the basket from a box to a sphere or other type of shape	Make the basket usable for other consumers other than street vendors	Eliminate the lid of the basket to reduce weight	Rearrange the table top to be on the back of the basket instead of on the sides
Substitute braces to support the table top instead of detachable legs	Combine the sides of the table to be part of the tabletop					Place the basket to be on the front tire of the wheel instead of the rear tire

The SCAMPER design process is used to implement new ideas into your design to improve it. Each letter stands for a different process that could be taken to improve the design. We used this process to improve some of the insufficiencies we found in our design from the black-box model. This process was a successful process for our design. We ended up using a few of the new ideas we came up with from this chart in our final design.

8.0 Final Design

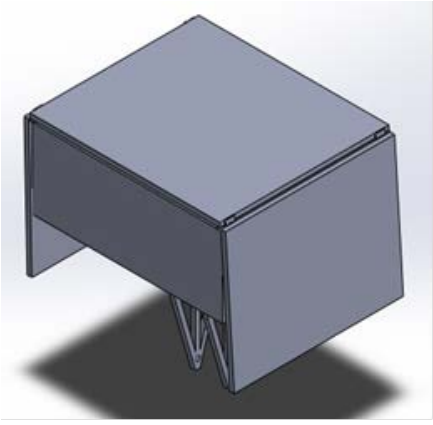

Our final design is a box that sits over the rear tire on a bike rack. The rear wheel bike rack is easily attachable to any types of bikes. The table flaps fold down to maximize the portability.

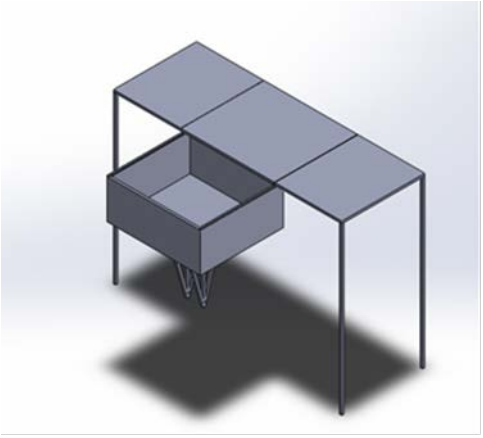

When extended out, the side flaps become a table. There are collapsible legs that stabilize the table. The tabletop also slides out so that the box acts more like a drawer. This is where you can store items.

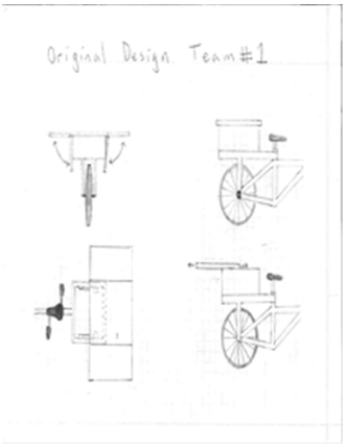

As seen in the sketches, the shelf attaches onto the rear wheel and the back of the seat.

To see more SolidWorks designs, look in the appendix)

8.1 Materials and material selection

When deciding on the material for our model we were choosing between oak wood, aluminium, and high density polyethylene. We first completed the chart below with unfinished oak wood. The results from this showed that aluminium and high density polyethylene were a much better choice for material according to the criteria below. We had planned on using oak wood as our material. It had a better rating in all of the criteria besides water absorption. Thermal conductivity was one criterion that was important in our selection. The oak wood was a much better insulator when it came to thermal conductivity (ASTM). We didn't want the temperature and external weather to affect the quality of the objects inside of the shelving unit, whether it be hot or cold temperatures. In the end it would also end up being a much more cost efficient material than both the aluminium and the high density polyethylene. Also, wood is a more sustainable material compared to the other two. Because of these two important factors we tried to come up with a way that the wood would be the best material to use. The criteria that was affecting the oak wood the most was the water absorption category. We found that if the wood was stained it had a much lower water absorption rate (ASTM). With the water absorption rate decreased it seemed that the oak wood was the best choice for the material of our product.

Figure 4. Material Selection Chart

Criteria	Yield Strength (psi) 10^3	Norm.	Modulus of Elasticity (psi)10^3	Norm	Density (lbs/in^3)	Norm.	Water Absorption (g)	Norm.	Thermal Conductivity (W/mK)	Norm.	Total
Weights	0.28	0.28	0.32	0.32	0.22	0.22	0.07	0.07	0.11	0.11	
Oak Wood	15.2	1.00	1779.3	0.17793	0.0257	1	59.34 g	0.0000017	0.16	1	0.667
Aluminum	8	0.53	10000	1	0.1	0.257	0.0001 g	1	167	0.00015	0.595
High Density Polyethylene	4.21	0.28	145	0.0145	0.0343	0.7493	0.0001 g	1	0.49	0.327	0.354

8.2 List of Materials

Table 6. List of required materials and components

Qty	Description	Vendor	Total Cost
1	Oak Red 1/2'' Thick Lumberneed approximately 4 sq feet per item.	Woodworkers Source	3.99 per sq ft 15.96 per item
4	Red Oak Dowel Rod 1/2''	Woodworkers Source	2.51 per rod 10.04 per item
2	Stanley Solid Brass Miniature Narrow Hinge 3/4" Long x 5/8" Open w/screws, 2 Pair	Woodcraft Supply LLC	3.15 a pair 6.30 per item
1	Promark 16" Full Extension Ball Bearing Drawer Slides	doorcorner.com	8.49 per item
1/4	"HILLMAN" ZINC PLATED STEEL WOOD SCREWS*Phillips*Box/100*No.10 x 1-1/2"	Ace Hardware	3.46 per box .87 per item
1	Delta Cycle Megarack Super-Sherpa Rear Bike Rack - 2009 Closeout	REI	29.93 per item (Optional)
	Total Cost		41.66 w/out rear wheel rack 71.59 with rear wheel rack

The materials in Table 6 are the ones we decided on using in our final product. We decided on using Red Oak wood to make our box and table top out of. The four Red Oak dowels are to be the detachable support legs to help our table top be more stable. The hinges are what make the table top able to fold up and down on each side of the rear wheel. Our box incorporates a sliding lid into the design. The lid slides by the Promark full extension ball bearing drawer slides. Our design used a premade rear bike rack. We found that some bicycle riders may already have one of these on their bicycles but some do not. With the bike rack included into the price of our product the bike box and table unit would be somewhere around $70.00. If the customer already had a rear wheel bike rack in their possession the bike box and table unit would be at a much cheaper price of about $40.00. Below in Table 7 is the contact information for the materials we will be making our product of.

Table 7. Contact information for suppliers of required Materials

Woodworkers Source 1-800-225-1153 http://www.woodcraft.com	Ace Hardware 1-866-290-5334 www.acehardware.com
DoorCorner 704-765-1968 www.doorcorner.com Address: Door Corner 9323 Magnolia Estates Drive Cornelius, NC 28031	REI 1-800-426-4840 www.REI.com

8.3 Cost & Life Cycle Cost

Using oak wood has tradeoffs compared to some other materials. Aluminum for example can hold more weight, and high density polyethylene is cheaper. However the cost of the benefits that oak wood provides outweigh the negatives. Aluminum while a stronger material is more expensive and worse for the environment. Oak wood has a carbon footprint of about 80% less than aluminum while it also has vastly less energy, air, and water footprints. Wood is also much better for the environment than high density polyethylene, while being stronger, having less thermal conductivity, and having less density. The only category that wood doesn't do better in is water absorption, but if it is stained even this problem isn't a big issue. Staining is not very expensive, and is proven to be effective used on wooden objects that are left outside a lot, such as decks. Properly treated and stained oak wood will also last for a long time, for several years if in very constant use. This time of a few years can likely be extended with proper treatment and use to possibly 5 to 10 years. This means that the effective cost is lower as it will not require replacements every 2 or 3 years.

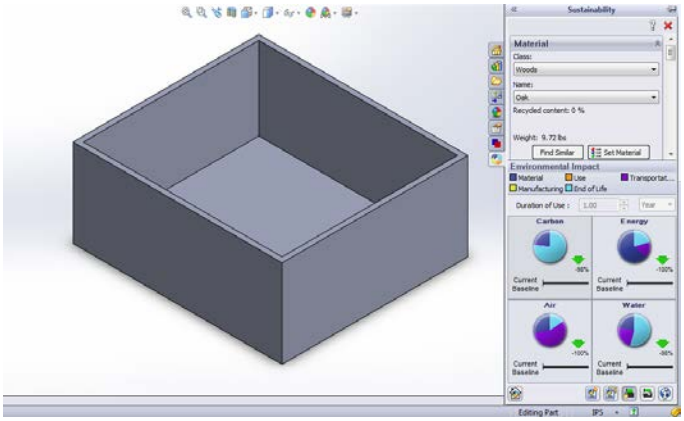

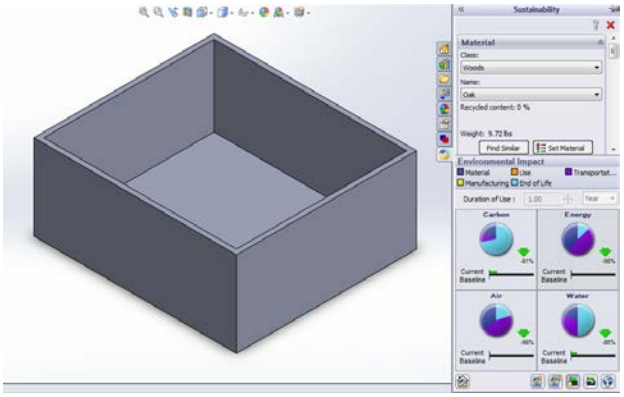

9.0 How Does It Work & Conclusions

How It Works

Our bike shelf is designed to attach to the rear wheel of a bike. The bike shelf easily attaches to any model of bike by a pre made rear wheel bike rack that attaches to the bar that is attached to the seat. The shelf is large enough for storage but not too big to affect one's bike riding ability so it is still safe for riders. The top of the box is on a track that slides open so one can utilize the top as a table and the storage area at the same time. One can use the box as a place to keep their money and valuables secure while riding and selling. The box slides open towards the rider while they are riding their bike. This ensures that the lid will not open while you are riding and your valuables will be safe while you are riding. The top has 2 side flaps that fold up into a large table. There are braces that are attached underneath each flap that will provide support for the table. The brace is along the entire length of the box so this ensures that it can still be a table while the lid is sliding. There are also four legs that screw into the flaps that hold up the table and give it more stabilization. These legs are adjustable to reach the ground with any size bike and will be useful if you were set up on uneven ground.

Conclusion

Based upon background research and customer survey results we have designed a collapsible bicycle shelf that converts into a small table. This table was originally designed for the use of street vendors but after consideration we made a model that could also be used by the ordinary bicycle rider. To design our model we examined and modified the usual street vending cart or tricycle that street vendors typically use. We also surveyed 14 consumers. We chose a design we thought would be most fitting to the customer's needs. Our final design is made up of a few different components. The main box is made out of wood with a sliding cover for the top. There are two wooden flaps that are hinged on the main box and are placed on both sides of the back wheel. Our design of this product is a more versatile design than the usual street vending cart. It can be placed on any type of bicycle and is easier to maneuver than a tricycle or other type of street vendor cart. We successfully designed a product that can be easily used by street vendors or the average person. Our main goals were to design a safe product that was easy to use and could be used in everyday life. We think our design successfully meets all of these goals. Because our model is simply made out of wood and hinges we think that it could be manufactured locally. With each piece already cut and ready to go it would just need assembled and packaged.

References

"ASM Material Data Sheet." ASM Material Data Sheet. MatWeb, n.d. Web. 13 Dec. 2012.

"ASTM D1037 Water Absorption White Oak Pdf Free Ebook Download from Terralegno.com." EbookBrowse.com. Professional Testing Labratory, Inc., 10 June 2008. Web. 13 Dec. 2012.

"HDPE Polymers." Material Properties of , Commodity Polymers. Matbase.com, 2009. Web. 13 Dec. 2012

Liszewski, Andrew. "Basket Pannier Straps a Portable Picnic Table To Your Bike." *Gizmodo*. N.p., 25 Oct. 2012. Web. 16 Nov. 2012. <http://gizmodo.com/5954918/basket-pannier-straps-a-portable-picnic-table-to-your-bike>.

Martin, Thomas J. "Numbers Names." Numbers Names. N.p., 24 Jan. 2003. Web. 16 Nov. 2012. <http://www.thomasjamesmartin.com/NumbersNames.htm>.

"Wald Bicycle Baskets, Training Wheels, Fenders, Racks, and Accessories - Home." Wald Bicycle Baskets, Training Wheels, Fenders, Racks, and Accessories - Home. N.p., n.d. Web. 16 Nov. 2012. <http://www.waldsports.com/>.

Appendix

Customer Survey

1) How do you transport things while riding a bike?

2) Do you think a shelf to transport items would be practical?

3) Rank in order of importance what is needed in a bike shelf:

   A) weight
   B) size
   C) storage space
   D) looks cool

4) What would you use a bike shelf for?

5) On a scale of 1 to 5 with 1 being the least useful and 5 being most useful rate the following features of a bike shelf:

   A) Durability
   B) Ease of Use
   C) Cost
   D) Efficiency

6) How often would do you use, or would you use, a bike shelf?

7) How much would you be willing to pay for a bike shelf?

8) Where would be the most convenient spot for the shelf to be located?

9) How much space in the shelf would you like?

10) What type of material would you like the shelf to be made out of?

11) What type of bike do you currently use? (street, mountain, beach, tricycle, …etc)

12) On a scale of 1 to 10, 10 being the highest, how difficult would it be to assemble this product yourself?

The box to shelf on Solidworks is an assembly comprising of multiple different parts. The main part is the box, which is open on top and has 3 sides. The sides of the box are attached to one flap of a hinge. The flap consists of a rectangular flat surface which connects to the side of the box, and a cylinder with a hole through the middle taking up half of the side of the surface. This is mated with another hinge flap and a cylindrical rod is put through the middle. The 2nd flap attaches to the table flap. This allows for the table to be put up or down. To get the table top to slide, we made a separate table top part in Solidworks. We then used a sort of slider, which consisted of 2 tracks on either side of the box. These tracks were hollow rectangular prisms which have a cylinder wheel inside that slides back and forth allowing the tabletop to be extended as a table or retracted as a box. Next the legs were made as simple rectangular prisms, about the height a bicycle would be off the ground. Then the attachment system was made. The attachment system was made by making a number sign shaped frame which would distribute the weight over the box so it was not all focused on one point. Then using sweeps we created beams that traveled down and converged to one point approximately where the axel of a bicycle's wheel would be given our shelf's location. A hole was then made through this conversion point to create a bolt on point for the attachment system to the bike wheel. You can these separate parts in the Solid Works images below.

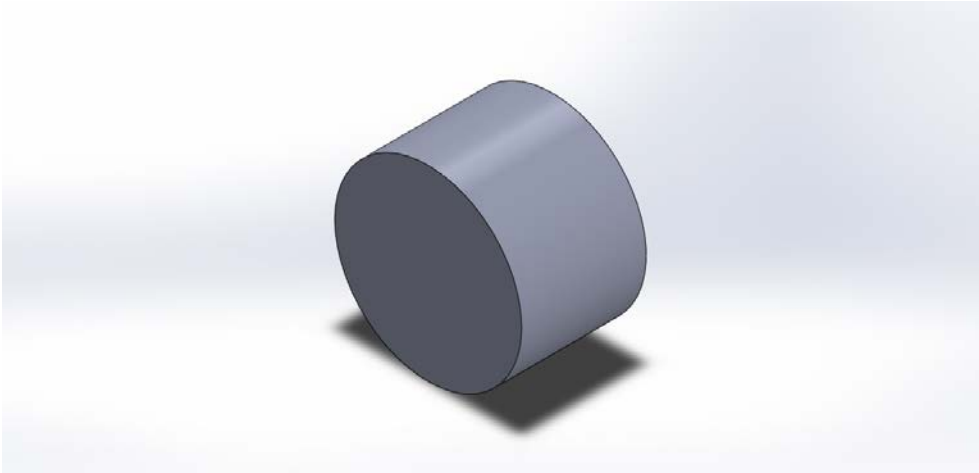

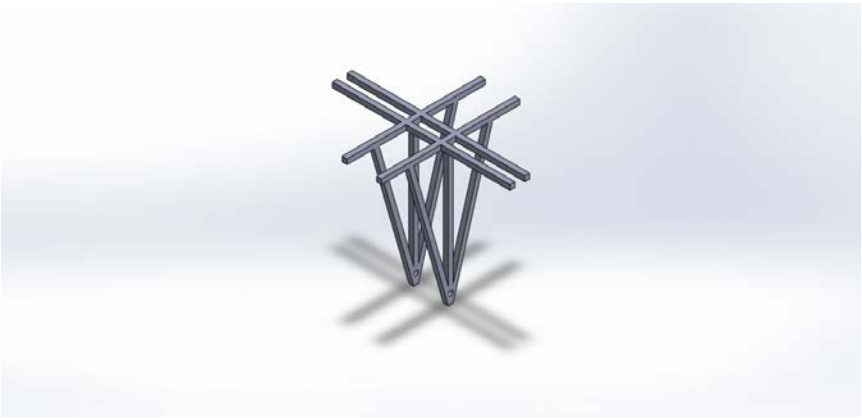

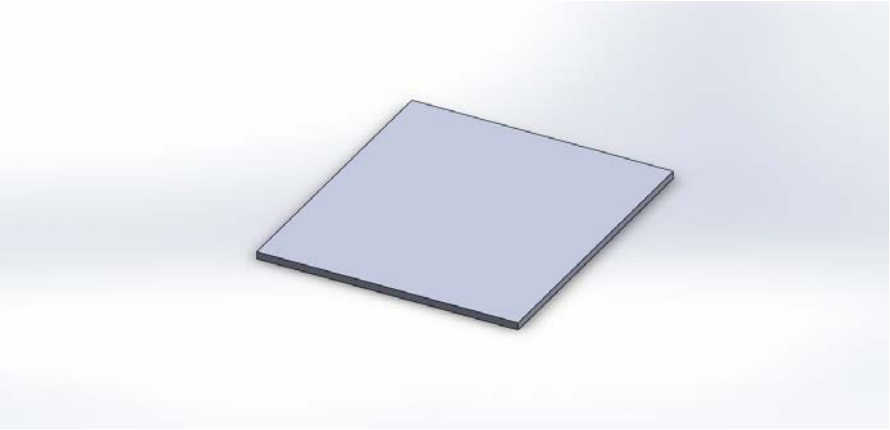

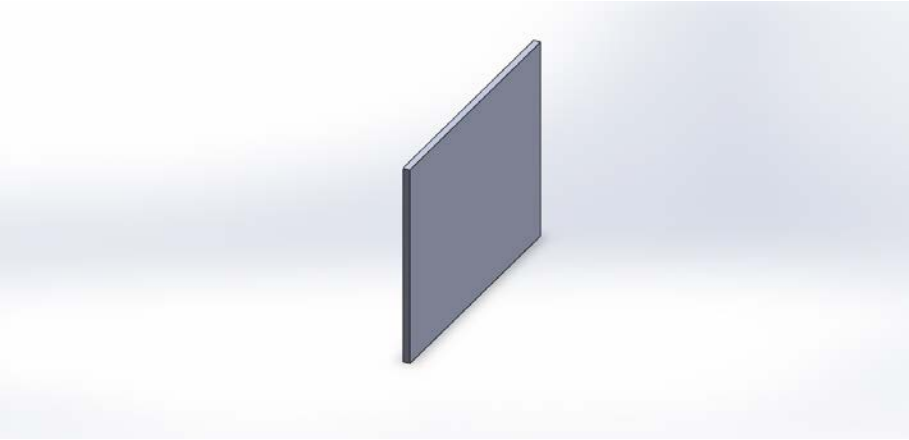

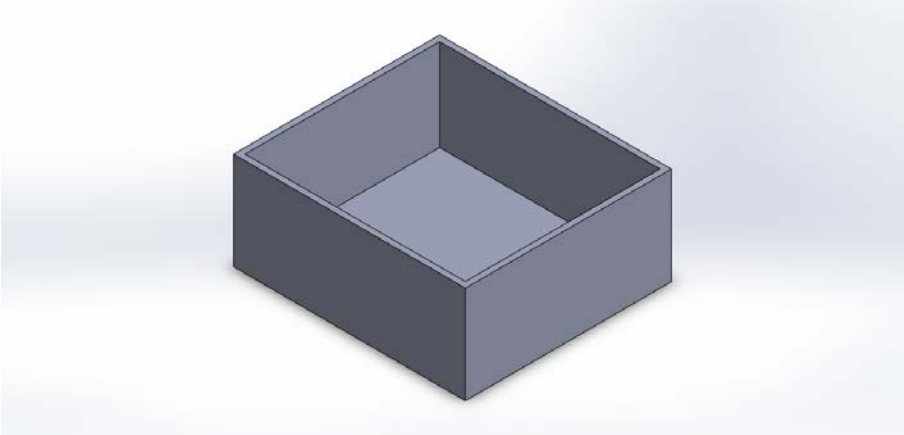

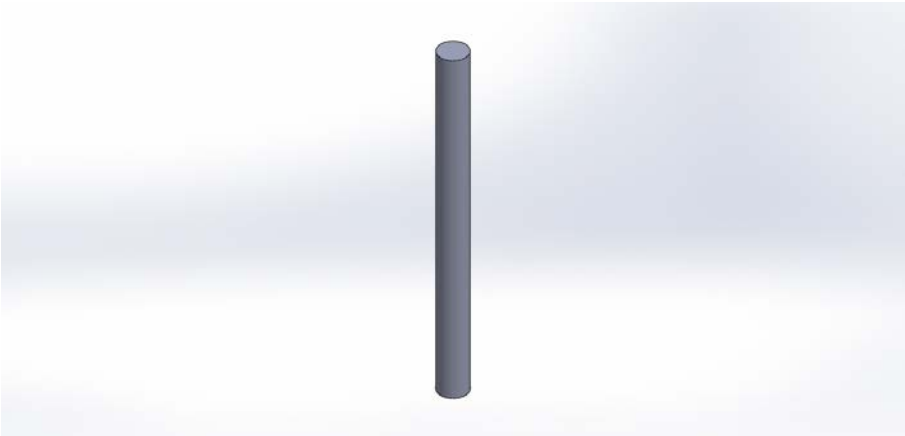

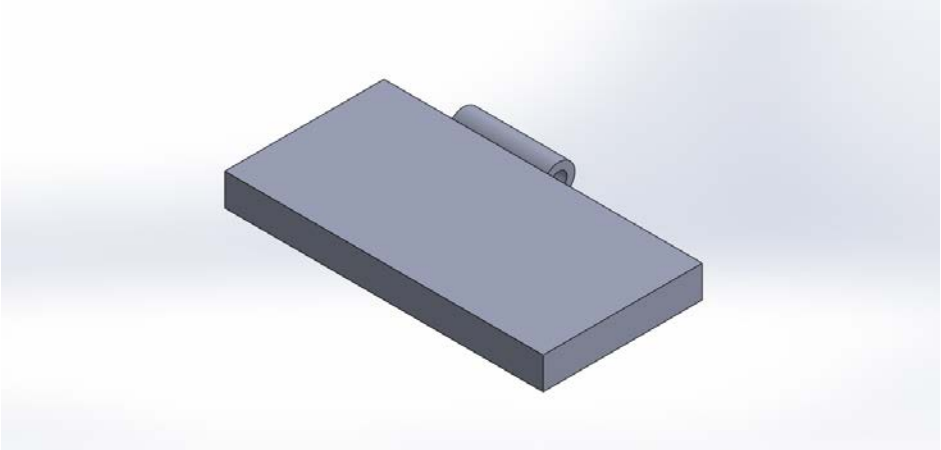

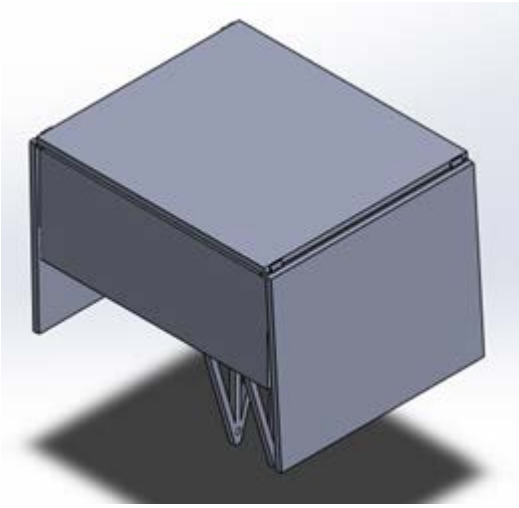

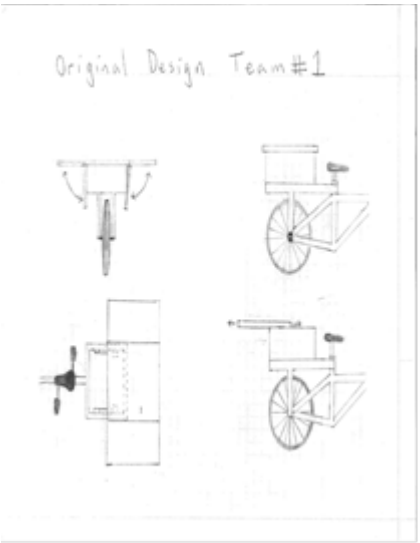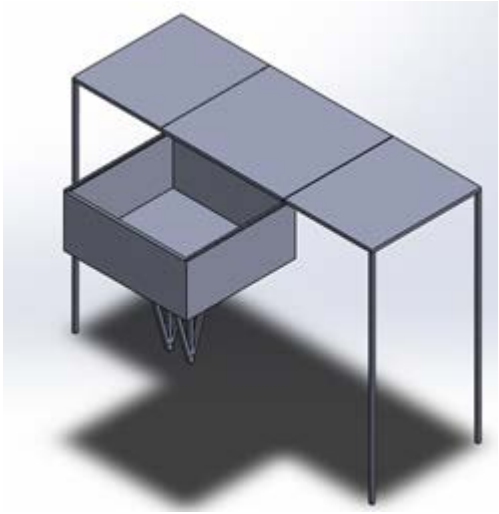
Original Design Team#1