FINAL REPORT ENGINEERING DESIGN

CAR SEAT TRANSFORMS TO STROLLER

Team #4

Members: Stephen Carns

Alex Feldbauer

Jonathon Manners

Contact Info: sac5731@psu.edu

amf352@psu.edu

jxm771@psu.edu

Professor: Dr.Daudi Waryoba

drw29@psu.edu

Address: DEF Building

College Place

DuBois, PA 15801

Date: May 3, 2016

Table of Contents

Executive Summary....3
Introduction....4
Problem Definition....4
Planning....4
Background....5
Designs....7
- Design 1....7
- Design 2....7
- Design 3....8
- Design 4....9

Concept Selection Process....10
Prototype....12
- Solidworks Design....13
- Stress Analysis....13
- 2D Drawing....14

Bill of Materials....14
Materials Selection....15
Plans for Fabrication and Testing....15
References....16
Appendix....18
- Calculations....18
- Solidworks....19
- 2D Drawings with Dimensions....20
- Group Meeting Schedule....21
- OTA Day....22

List of Figures

1.1 Graco Click and Connect.....5
1.2 Doona Sky.....6
1.3 Design Concept 1.....7
1.4 Design Concept 2.....8
1.5 Design Concept 3.....8
1.6 Design Concept 4.....9
1.7 Final Design.....12
1.8 Stress Analysis.....13
1.9 2D Drawing.....14
1.10 The Final Prototype.....15

List of Tables

1.1 Concept Screening.....10
1.2 Concept scoring.....11
1.3 QFD.....11
1.4 Bill of Materials.....14

Executive Summary

Having a child comes with a lot of baggage. Not only do parents have to constantly carry the child, the bags, and their own belongings; they have to carry a car seat and a stroller. All these things can wear on a parent. The simpler this process could be, the better for the parent. The team's project was to create a way to combine a car seat and stroller into one simple idea. Many of these car seat stroller combinations today are either expensive or not one piece.

Many of the parents were asked to identify some specific needs for this product. It was found that the product needs to be inexpensive, light weight, safe, and easy to transition. Most of the available products had these specifications, but some were lacking in areas that our product would compensate for.

The team's main goal was to create an inexpensive and safe stroller that transitions into a car seat. These goals were accomplished using lightweight materials such as aluminum tube and flat stock. By creating a cross bar design for the legs, storage space can easily be added to the bottom of the stroller. This robust design will take the weight off of mothers, and provide storage for their purses and other things in it. A design that works similar to a scissor lift will make the transition from car seat to stroller easy for parents. All the safety regulations for both car seats and strollers were researched. Within the team's budget as many safety regulations as possible were met. To cut down on the cost of the project, cheaper materials were used and a cost efficient design was created. The results are that the stroller is all together cheaper, lighter, and easier to transition.

Introduction

The project goal was to take a car seat and make it able to transition to a stroller. The team then had to decide what kind of car seat we wanted to use and find the dimensions of the car seat. We chose a rear facing car seat, which fits infants – 2 year olds. A front facing car seat can fit up to the potential weight of a 6 year old at an average of 60 pounds. The weight of a front facing car seat can be as much as 30lbs, without the addition of a child. The combination of those weights will cause any parent to struggle while transitioning their kid into and out of the car. An average 2 year old can weigh about 30lbs thus making this age group a more reasonable weight consideration because it remains easier to handle. After determining the type of car seat, the dimensions and height of the car seat were researched and identified.

Problem Definition

The goal is to create a car seat that can easily transition into a stroller. Objectives that needed to be reached were to make it inexpensive: not breaking parents banking account, and light weight: ensuring ease, while lifting the product into and out of the car. In the current market many of the products are either two separate pieces or very expensive. The team hopes to eliminate this by creating one product that does both.

Planning

The team agreed to meet every Wednesday when work needed to be done on the project. These meetings would be used to plan out how each task would be broken up and to complete different tasks together. In the Appendix, a full break down can be seen of when all the meetings were held and the accomplishments of each.

Background

To start the project, the target market needed to be reached to get a better understanding of not only the market but the customers. To do this, the team went to our local Walmart and other locations to ask parents what their expectations were in a stroller, and if they would use a two in one combination. The conclusion was that they would, but it would have to easily fit in their car, be light weight, easily transition from a car seat into a stroller, and be inexpensive [1]. After finding out this information the team set these as our objectives.

The team then looked into what kind of parents would use this product. A lot of parents who are on the go or traveling a lot wanted the product to be two in one so they would not have to carry all the extra weight of the less convenient products. The team also found that many parents had enough stuff to carry as it is; to add more weight to the struggle to the task made it more difficult. Other types of parents that this type of product accommodated fell into an active category: such as joggers, who wanted to take their children for a run. The transition of the car seat to a stroller would make it easy for the parents to exercise with their kid without having to carry the extra weight.

After identifying the market, the team moved onto the existing products currently in the market. Two of the main competitors are Doona and Graco. Graco has created a car seat that clicks into the base of a stroller. The downside to this product is the fact that it is two parts, adding to the amount of baggage parents have to take with them. It was not that expensive, only costing on average $200 [2]. The main competitor for the team is the Doona sky model, which is a car seat the transforms into a stroller. It is lightweight with the whole product only weighing 15lbs, but it cost $500 [3]. The gathering of this necessary information concluded what the team was able to identify as their criteria and set values to their objectives.

Figure 1.1 Graco Click and Connect

Figure 1.2 Doona Sky

The team then looked into what type of car seat would be best for the age group the team had chosen. The team chose a rear facing car seat because of the weight of the child [4]. They then looked into how old the children occupying the product would be and about how much they would weigh. It was found that a car seat for infants to 2 year olds would be most suitable. After two years of age, it becomes very difficult to lift the child and the car seat out of the car. The average weight of a 2 year old can be as much as to 30lbs; after adding that to the weight of the product, the team concluded it would be too much for the parent to lift out of the car [5].

Once the concept generation process began, the team looked into safety regulations for both car seats and strollers. The team met as many safety regulations as possible for the current prototype, but due to budget constraints, only so many were accommodated at the time. Necessary regulations are as follows: the product must have a parking brake [6] and the base of any existing car seat cannot be damaged so it could still be secured safely in the car [7]. In a future model the team would create the model out of plastic to make it safer for the parents to transition the product [8]. This would prevent fingers from being caught in the current metal design. The team also went to Walmart to measure current strollers' height to make sure the children were a safe distance from the ground. The dimensions are the base of what the team used to identify the dimensions of rear facing car seats that an average parent would use.

With the dimensions, the team looked into the best possible materials to use ranging on the weight of the material to the height of the average stroller wheel. Due to the weight the team wanted to achieve, the team found that aluminum would be a better option than steel [9]. After measuring the wheels on current strollers at Walmart it was found that the team should use about 6 inch wheels.

Designs

Design 1

The first concept that the team came up with was to create a base that would have tension cables that would allow the legs to easily transition back to the base by just pulling the cable up. The base would just be attached to a car seat that the team would purchase or have donated. This idea was eliminated due to it not being a very safe option for the kid to be in the stroller and the parent trying to mess with the cables to get it to expand.

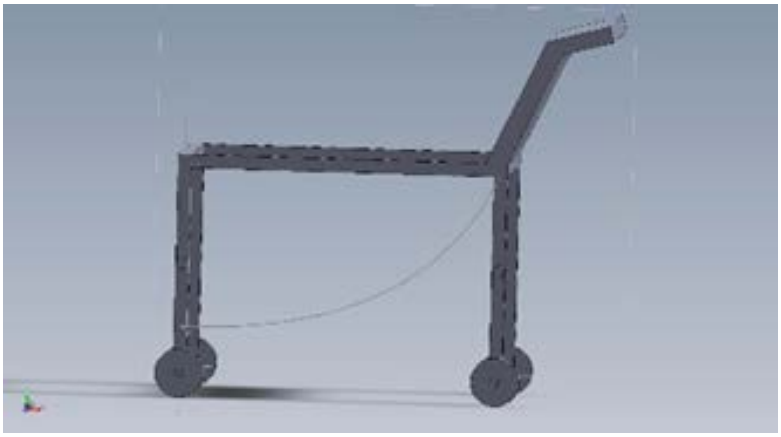

Figure 1.3 Design Concept 1

This Design was called Tension cables later in the report referring to the cable that helps to open and close the design. Also featuring an adjustable handle that attaches to the base this design would be easy for mothers to push.

Design 2

The second concept was to have legs attached to the base that would easily fold up into the base and then later be pulled out by the parent. The legs would be telescoping allowing the parent to adjust the height of the stroller. All though this was a good idea for the team it was eliminated because for the team to create the telescoping legs it would be very difficult to get the two pieces of metal to fit perfectly inside one another and could end up being very expensive in the end.

Very similar to the way a handle on a suit case works this design would have legs with the same idea. Mothers would be able to adjust the height of the stroller simply by pushing a button and extending the legs further.

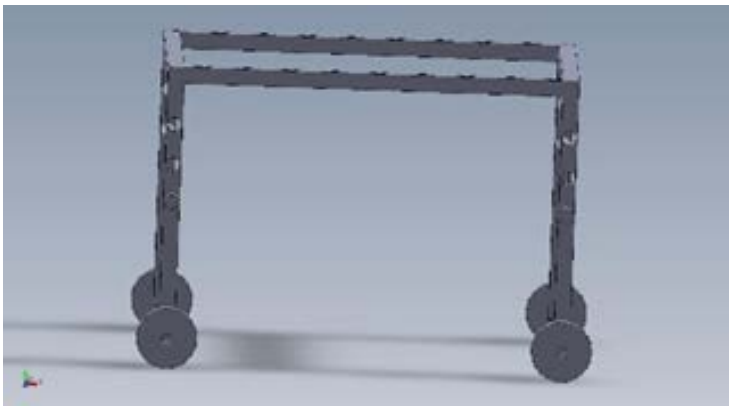

Figure 1.4 Design concept 2

Design 3

The third idea was to create a product similar to the Graco design which was a two part system. The frame of the stroller would have a handle and a cross bar design for the legs similar to a scissor lift to get the height. The car seat would then just attach to the base. This idea was eliminated because the main goal was to create a two in one product making this one not really fit the main idea of the project.

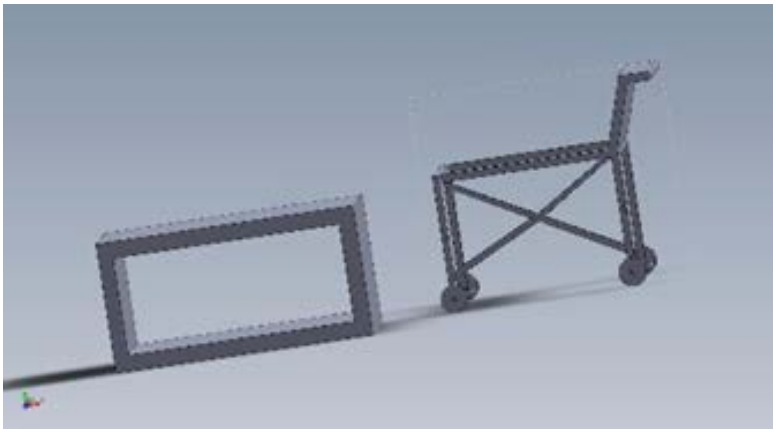

This design is a two part system that allows the parent to take the car seat out of the car and attach it to the frame of the stroller. The box on the left is to symbolize the car seat.

Figure 1.5 Design Concept 3

Design 4

Design 4 was the idea that the team would end up going with in the end because of its easy transition and being able to build it. The fourth concept was to create a base that would have legs that were similar to a scissor lift as mentioned before in the previous idea. But this concept would have the car seat attached the base. Making it able to fold up in the base of the car seat allowing parents to have a car seat that would transition into the stroller in one step. This concept met the needs of our customers and the engineering target that were set by the team.

This being the final design, it features a cross-bar design with supports in the middle. The supports help to stabilize the legs. With this scissor lift design the height can be adjusted by adding more bars to add to the triangles.

Figure 1.6 Design Concept

Concept Selection Process

After creating the concepts the team did a concept screening and a concept scoring to find the best idea that fit the needs. The concept screening helped to narrow down the ideas that could be combined or eliminated by adding pluses for meets the need and minuses for not. The concepts were also compared to the competitors that were identified earlier in the research. The product needed to be competitive with the current products so comparing them really help to see which ideas did and did not meet the needs.

Table 1.1 Concept Screening
Adds pluses to meets the criteria, 0 for neutral, and – for does not meet the criteria.

Selection Criteria	Cross-bar	Tension	Extendable	Two Parts	Cross-bar +Tension	Competitor A	Competitor B
Inexpensive	+	+	+	-	0	-	0
Safe	+	0	+	+	0	+	+
Ease of Transition	+	+	+	-	+	+	-
Space Effective	+	+	+	-	+	+	-
Lightweight	0	0	+	-	0	+	-
Appealing	+	+	-	+	+	+	+
Ease of Manufacture	0	-	+	0	-	-	-
Storage	+	0	0	0	+	-	+
Ease of Handling	+	+	+	+	+	+	+
Sum +'s	7	4	7	3	5	6	4
Sum 0's	2	3	1	2	3	0	1
Sum -'s	0	1	1	4	1	3	4
Net Score	7	3	6	-1	4	3	0
Rank	1	4	2	5	3		
Continue?	yes	Combine		no	yes		

It can be seen in the concept screening that design 3 was eliminated, the two system. The design 1 and design 2 were combined. After completing the concept screening the concept scoring matrix could be created. This would add weight to the most important selection criteria and help the team get a better idea of which concept was the best. The products were

also ranked on a scale of 1-5. Adding numbers to this process made it easier to see the best idea. Which was design 4, the cross bar.

Table 1.2 Concept Scoring
This will add weights to what was thought to be the most important criteria and later rank the concepts to find the best possible solution.

		Cross-Bar		Extendable w/ Tension		Cross-Bar w/ Tension		Reference Competitor A
Selection Criteria	Weight	Rating	Weighted Score	Rating	Weighted Score	Rating	Weighted Score	Rating
Inexpensive	10%	3	0.3	2	0.2	3	0.3	1
Safe	10%	3	0.3	2	0.2	2	0.2	4
Ease of Transition	25%	4	1	4	1	4	1	4
Space Effective	5%	4	0.2	4	0.2	4	0.2	4
Light Weight	10%	4	0.4	4	0.4	3	0.3	4
Appealing	5%	4	0.2	4	0.2	4	0.2	4
Ease of Manufacture	15%	3	0.45	3	0.45	2	0.3	1
Storage	5%	3	0.15	2	0.1	3	0.15	1
Ease of Handeling	15%	4	0.6	3	0.45	3	0.45	4
	Total Score	3.6		3.2		3.1		
	Rank	1		2		3		
	Continue?	Develop		No		No		

Once the finial idea was selected the team created a Quality Function Deployment for the idea to make sure the concept would meet the customers' requirements, the engineering requirements, the targets the team had set, and be competitive against Doona and Graco.

Table 1.3 QFD
This identifies what the customers' expectations are for the concept chosen and how the engineer with be able to meet these requirements.

Engineering Requirements

Customer Requirements	Cost	Volume	Weight	Smoothness of Ride	Time of Transition	Time to Build	Safety Features		A	B
Inexpensive	X									
Safe							X		X	X
Ease of Transition					X				X	
Space Effective		X							X	
Lightweight			X						X	
Appealing	X		X	X			X		X	X
Ease of Manufacture						X				
Storage		X								X
Ease of Handling				X	X				X	X
Unit	$	in^3	lbs	%	sec	days	%			
Value	≤100	12	<15	100	<15	<7	100			

Competitive Benchmarks

Engineering Targets

Prototype

The porotype was modeled in Solidworks 2014 in order to have a drawing for the build of the product. The model helped to get the dimensions that the product would have before building began and to do a stress analysis on the product to make sure it would be strong enough to hold the child. Please see the appendix, page 19, for additional views.

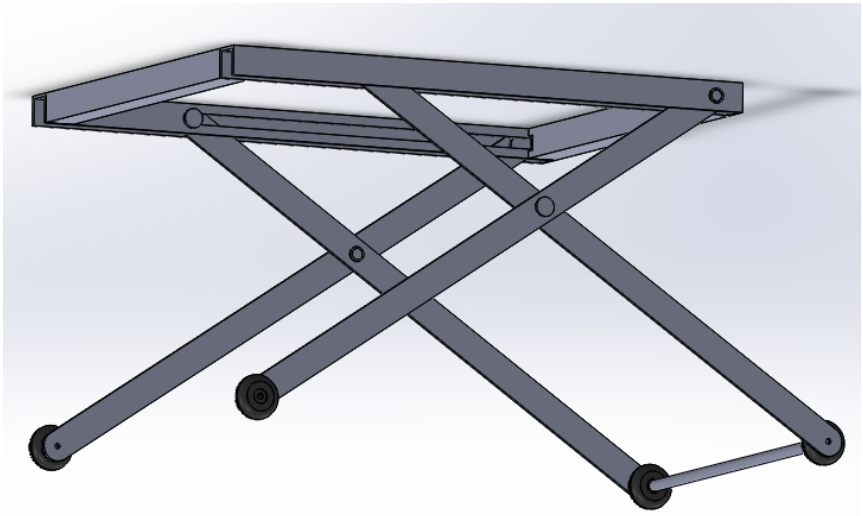

Figure 1.7 Final Design

The final design shows a light weight design that only ways about 15lbs. The legs are able to fully collapse and then fold up into the base of the car seat. After the legs have been collapsed they can later be extended by pulling a tether for the mother to easily extend it. It also features a clip on the back of the car seat to safely and securely clip the legs into place when it is folded up into the base.

The Stress analysis on the product showed that the product would be able to handle a child who weighed 25lbs. This would be more than enough weight because the car seat is only approved for a child who weighs max 22lbs.

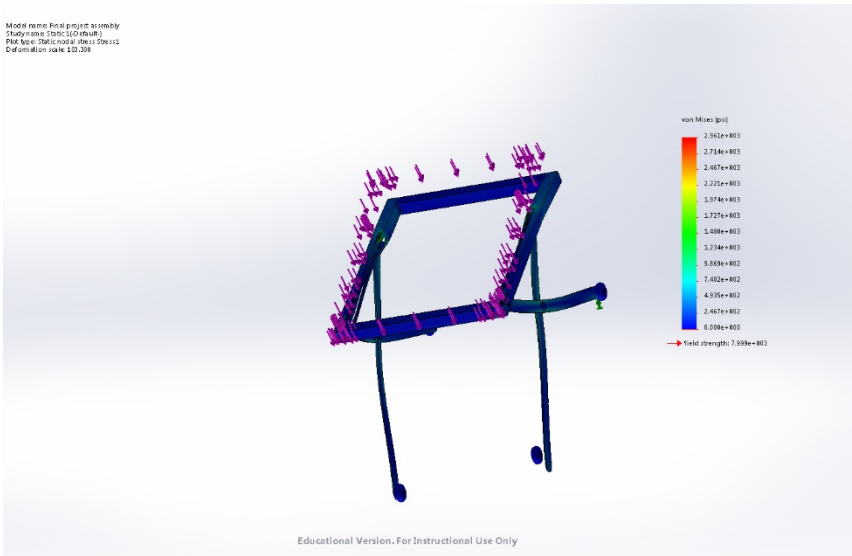

Figure 1.8 Stress Analysis

The stress analysis was done as if a 25 pound weight was placed on the car seat. After doing this stress analysis it was found that support bars needed to be put into place across both legs and potentially in the middle of the design. The analysis shows that the base would hold but it would be under a lot of stress. In the analysis the wheels have to be taken off to complete the analysis due to technical difficulties with the program. So that could have been another factor in the analysis not being exactly has planned.

The 2D drawing of the product shows the separate parts of the design and the stroller at different views.

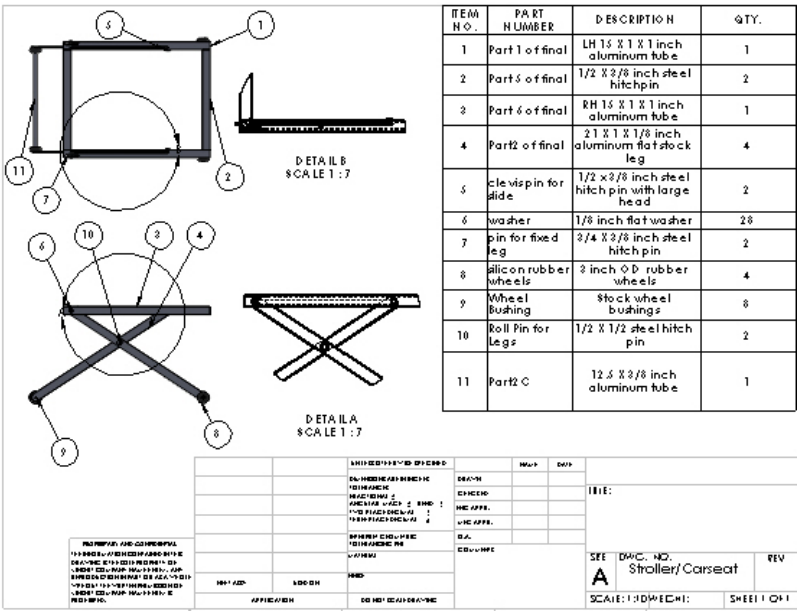

ITEM NO.	PART NUMBER	DESCRIPTION	QTY.
1	Part 1 of final	LH 15 X 1 X 1 inch aluminum tube	1
2	Part 5 of final	1/2 X 3/8 inch steel hitchpin	2
3	Part 6 of final	RH 15 X 1 X 1 inch aluminum tube	1
4	Part2 of final	21 X 1 X 1/8 inch aluminum flat stock leg	4
5	clevispin for slide	1/2 x 3/8 inch steel hitch pin with large head	2
6	washer	1/8 inch flat washer	28
7	pin for fixed leg	3/4 X 3/8 inch steel hitch pin	2
8	silicon rubber wheels	3 inch OD rubber wheels	4
9	Wheel Bushing	Stock wheel bushings	8
10	Roll Pin for Legs	1/2 X 1/2 steel hitch pin	2
11	Part2 C	12.5 X 3/8 inch aluminum tube	1

The 2D drawing shows the different parts that make up the design and the dimensions of the product the dimensions of the product can be found in the appendix.

Figure 1.9 2D Drawing

Bill of Materials

Here is a list of all the materials the team used and which part used each material.

Table 1.4 Bill of Materials

ITEM NO.	PART NUMBER	DESCRIPTION	QTY.
1	Part 1 of final	LH 15 X 1 X 1 inch aluminum tube	1
2	Part 5 of final	1/2 X 3/8 inch steel hitchpin	2
3	Part 6 of final	RH 15 X 1 X 1 inch aluminum tube	1
4	Part2 of final	21 X 1 X 1/8 inch aluminum flat stock leg	4
5	clevis pin for slide	1/2 x 3/8 inch steel hitch pin with large head	2
6	washer	1/8 inch flat washer	28
7	pin for fixed leg	3/4 X 3/8 inch steel hitch pin	2
8	silicon rubber wheels	3 inch OD rubber wheels	4
9	Wheel Bushing	Stock wheel bushings	8
10	Roll Pin for Legs	1/2 X 1/2 steel hitch pin	2
11	Part2C	12.5 X 3/8 inch aluminum tube	1

This is a full list of the parts used to create the prototype and what they are in the 2D Solidworks image.

Material Selection

As it was touched on before in the background section, the materials needed to be looked into ahead of time to make sure they would not make the product to heavy and would help to meet the safety regulations. The team had a budget of $100 to stay in so the selection of materials was very important. The team choose materials that fit well into the allocated budget and the weight constraint that was set. Resulting in the majority of the project to be built out of aluminum.

Plans for Fabrication and Testing

To create the project a lot of it had to be machined because the material chosen was aluminum. One of the team members had a machine shop that they were able to use so they helped will welding and cutting the slots in the legs and base of the stroller. To test the product the team attached the product into a car and saw how easily a person could lift the car seat out of the car and transition it into a stroller. The results were that the person could easily lift and transition the car seat stroller combination.

Figure 1.10 The Final Prototype showing the wheels, base, and finished product.

References

[1] Hartshorn, Jessica. "Your Stroller Buying Guide." Parents. Web. 3 Mar. 2016. Accessed 20 April. 2016. <http://www.parents.com/baby/gear/strollers/stroller-buying-guide/ >.

[2] "Stylus™ Click Connect™ Travel System.", *Kendra*™. N.p., n.d. Web. Accessed 21 Mar. 2016. <http://www.gracobaby.com/products/pages/stylus-click-connect-travel-system-kendra-1913883.aspx>.

[3] "Doona - Google Search." Doona - Google Search. Web. Accessed 03 Mar. 2016. https://www.google.com/search?q=doona >.

[4] "Car seat Recommendations for Children." *Parents Central*. NHTSA. n.d. Web. Accessed 25 April. 2016. < http://www.safercar.gov/parents/CarSeats/Right-Seat-Age-And-Size-Recommendations.htm >.

[5] Ipatenco, Sara. "The Average Weight & Height of 2-Year-Olds." *Livestrong.com.* Demand Media. 16 Jan. 2014. Web. Accessed 25 April 2016. < http://www.livestrong.com/article/148862-the-normal-weight-height-of-babies-at-age-2/ >.

[6] Aldana, Karen. "NHTSA Releases New Child Seat Guidelines." NHTSA. 21 Mar. 2011. Web. Accessed 25 April. 2016. <http://www.nhtsa.gov/About+NHTSA/Press+Releases/2011/NHTSA+Releases+New+Child+Seat+Guidelines >

[7] "The Consumer Product Safety Improvement Act (CPSIA)." SaferProducts.gov. United States Consumer product Saftey Commission. 06 Dec. 2013. Web. Accessed 25 April. 2016. <http://www.cpsc.gov/en/Regulations-Laws--Standards/Statutes/The-Consumer-Product-Safety-Improvement-Act/>

[8] "Carriages and Strollers Business Guidance." SaferProducts.gov. United States Consumer Product Saftey Commission. n.d. Web. Accessed 25 April 2016. <http://www.cpsc.gov/en/Business--Manufacturing/Business-Education/Business-Guidance/Carriages-and-Strollers/>

[9] "Steel." aqua-calc conversions + calculations. n.d. Web. Accessed 25 April 2016. <http://www.aqua-calc.com/page/density-table/substance/steel>

Appendix

Calculations:

Calculation was use to find the length of the legs and the angle at which they should stand

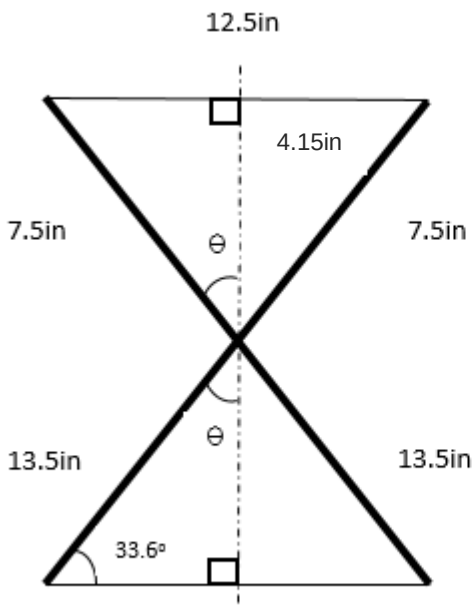

$7.5^2 - 6.25^2 = c^2$

c = 4.15in

sin 33.6 = $\frac{opp}{13.5}$

opp = 7.47

Θ= 56.4°

Solidworks:

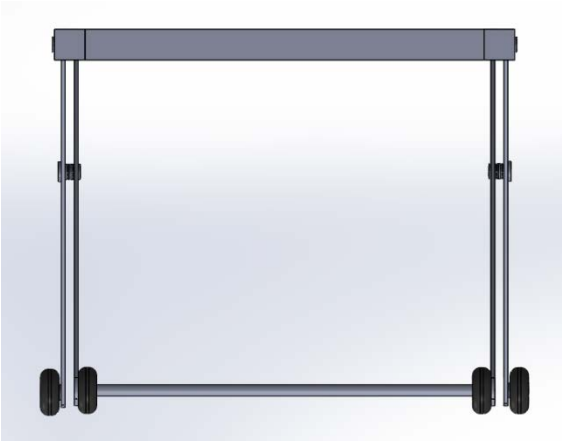

Right Side View of stroller showing the supporting bar between the wheels

Full view of the stroller showing the slot the legs slide across

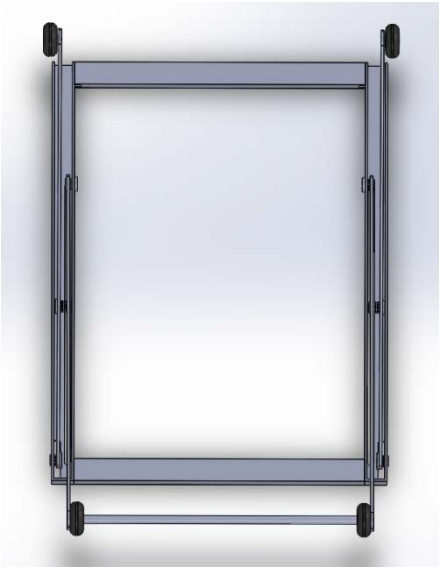

Bottom view of the stroller (not collapsed)

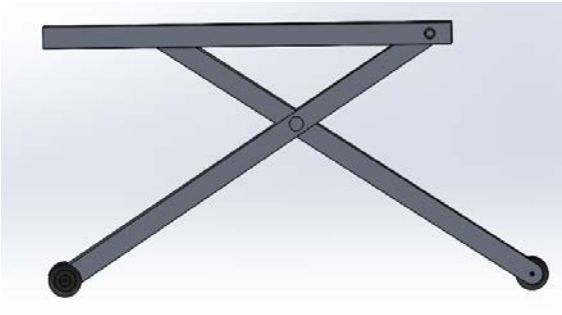

Side view of stroller at full height

2D Drawing with Dimensions

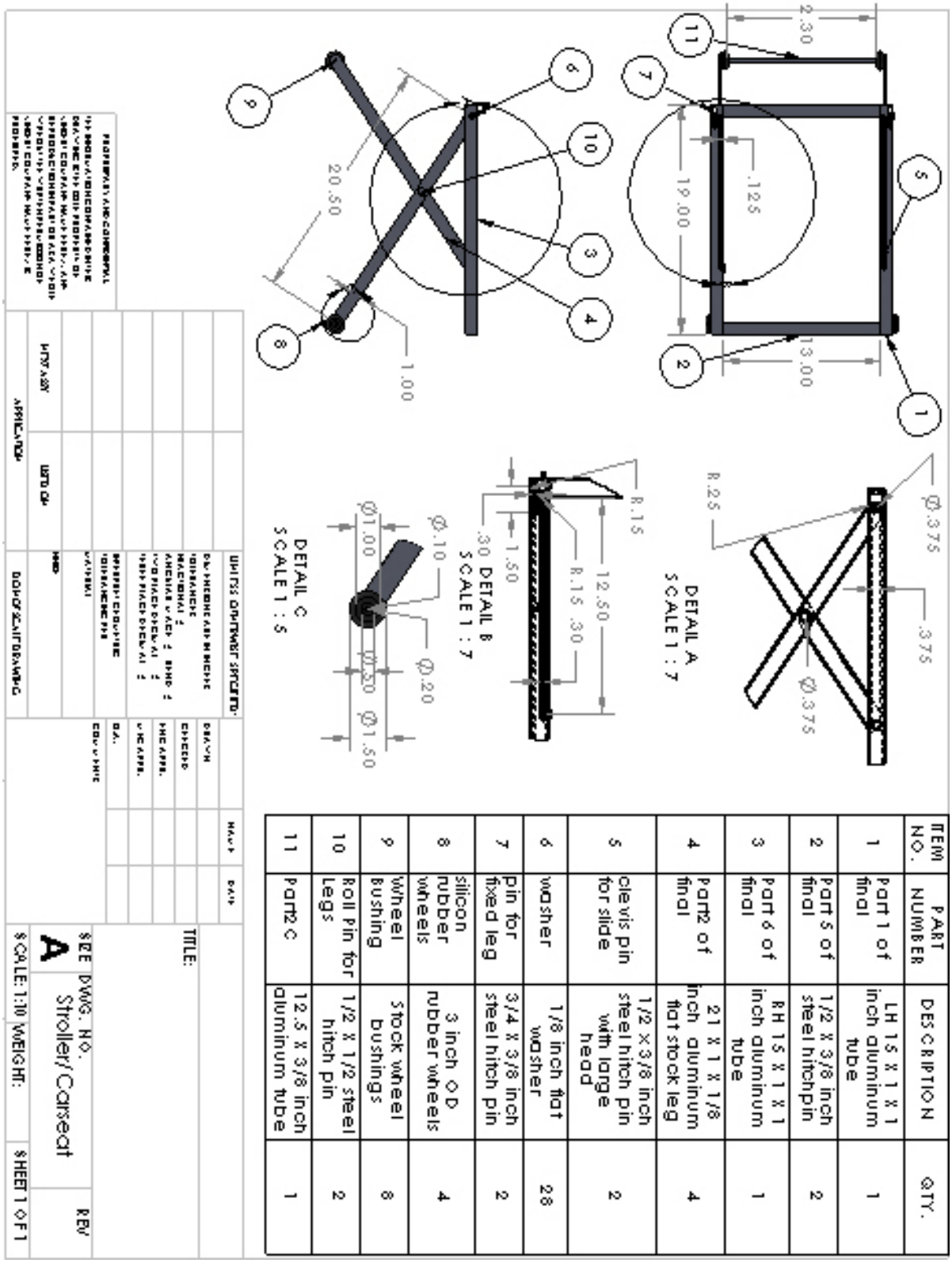

ITEM NO.	PART NUMBER	DESCRIPTION	QTY.
1	Part 1 of final	LH 1.5 X 1 X 1 inch aluminum tube	1
2	Part 5 of final	1/2 X 3/8 inch steel hitchpin	2
3	Part 6 of final	RH 1.5 X 1 X 1 inch aluminum tube	1
4	Part2 of final	21 X 1 X 1/8 inch aluminum flat stock leg	4
5	clevis pin for slide	1/2 x 3/8 inch steel hitch pin with large head	2
6	washer	1/8 inch flat washer	28
7	pin for fixed leg	3/4 X 3/8 inch steel hitch pin	2
8	silicon rubber wheels	3 inch OD rubber wheels	4
9	Wheel Bushing	Stock wheel bushings	8
10	Roll Pin for Legs	1/2 X 1/2 steel hitch pin	2
11	Part2 C	12.5 X 3/8 inch aluminum tube	1

Group Meeting Schedule

Day of Meeting	What Was Done	Location	Time
27-Apr	OTA - Day	cafeteria	12 -1:15
26-Apr	Solidworks stress analysis/ motion study	library	3:00 - 5:00
25-Apr	Solidworks stress analysis/ motion study	library	3:00 -5:00
23-Apr	product build	house	5:00 - 11:00
22-Apr	product build	house	5:00 - 11:00
20-Apr	product build/ team meeting	library	3:00 - 5:00
19-Apr	product build	house	5:00 - 11:00
18-Apr	product build	house	5:00 -11:00
15-Apr	materials were collected/ product build	psu	5:00 - 11:00
14-Apr	team meeting	OTA House	12 - 12:30
6-Apr	team meeting worked on solidworks	library	3:00 - 5:00
4-Apr	materials order submitted worked on solidworks	library	3:00 - 5:00
3-Apr	solidworks design	library	3:00 - 5:00
2-Apr	solidworks design	library	3:00 - 5:00
2-Apr	solidworks design	library	3:00 - 5:00
26-Mar	solidworks design	library	3:00 - 5:00
25-Mar	solidworks design	library	3:00 - 5:00
23-Mar	solidworks design and a team meeting	library	3:00 - 5:00
16-Mar	team meeting	library	3:00 - 5:00
9-Mar	team meeting	library	3:00 - 5:00
2-Mar	team meeting	library	3:00 - 5:00
24-Feb	team meeting	library	3:00 - 5:00
17-Feb	team meeting	library	3:00 - 5:00
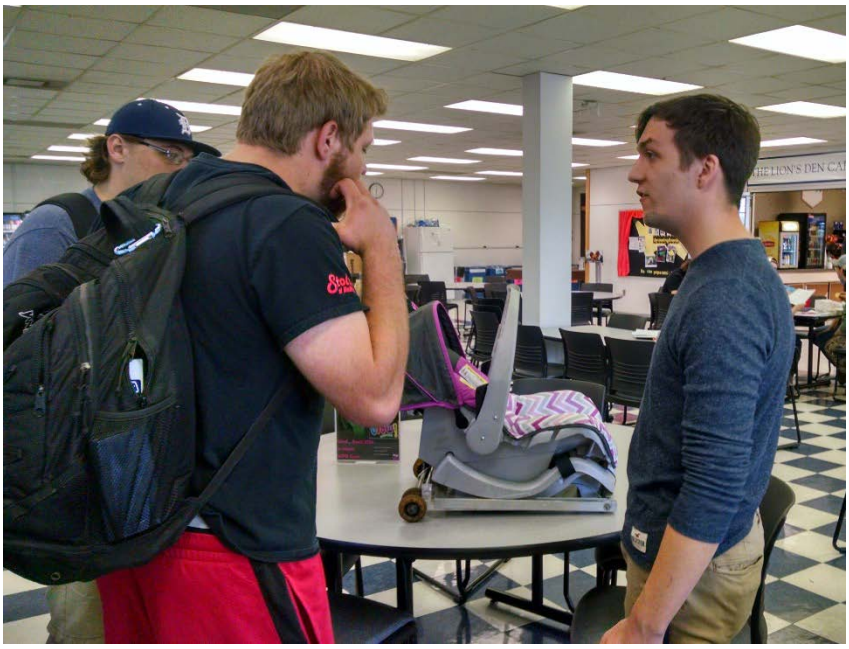
OTA Day