# The Stroller Car Seat Combination

PennState College of Engineering

PENNSTATE DuBois 1855

- Stephen Carns
- Alex Feldbauer
- Jonathon Manners


An Engineer/O.T.A. collaboration project.

# Introduction

- **The Engineering Process**

1.) Identify the Need

2.) Problem Definition

- Goal
- Objectives
- Constraints

3.)Planning

4.) Gather Information

5.) Concept Generation

6.) Analyze the concepts

7.) Choose the Best Concept

8.) Communication

9.) Implementation

# Identify the Need

- Create a car seat that can easily transition into a stroller

- Goal – To create a car seat and a stroller into one product
- Objectives – light weight, easy to transition, safe, and appealing
- Constraints- age of child, weight, and safety regulations

# PROBLEM DEFINITION

- Team meeting Schedule
- Group leaders
- Project tasks

# PLANNING

| Day of Meeting | What Was Done | Location | Time |
|---|---|---|---|
| 27-Apr | OTA - Day | cafeteria | 12 -1:15 |
| 26-Apr | Solidworks stress analysis/ motion study | library | 3:00 - 5:00 |
| 25-Apr | Solidworks stress analysis/ motion study | library | 3:00 -5:00 |
| 23-Apr | product build | house | 5:00 - 11:00 |
| 22-Apr | product build | house | 5:00 - 11:00 |
| 20-Apr | product build/ team meeting | library | 3:00 - 5:00 |
| 19-Apr | product build | house | 5:00 - 11:00 |
| 18-Apr | product build | house | 5:00 -11:00 |
| 15-Apr | materials were collected/ product build | psu | 5:00 - 11:00 |
| 14-Apr | team meeting | OTA House | 12 - 12:30 |
| 6-Apr | team meeting worked on solidworks | library | 3:00 - 5:00 |
| 4-Apr | materials order submitted worked on solidworks | library | 3:00 - 5:00 |
| 3-Apr | solidworks design | library | 3:00 - 5:00 |
| 2-Apr | solidworks design | library | 3:00 - 5:00 |
| 2-Apr | solidworks design | library | 3:00 - 5:00 |
| 26-Mar | solidworks design | library | 3:00 - 5:00 |
| 25-Mar | solidworks design | library | 3:00 - 5:00 |
| 23-Mar | solidworks design and a team meeting | library | 3:00 - 5:00 |
| 16-Mar | team meeting | library | 3:00 - 5:00 |
| 9-Mar | team meeting | library | 3:00 - 5:00 |
| 2-Mar | team meeting | library | 3:00 - 5:00 |
| 24-Feb | team meeting | library | 3:00 - 5:00 |
| 17-Feb | team meeting | library | 3:00 - 5:00 |

- The Market
- Car seats
- Stroller and car seat dimensions
- Competitors
- Safety Regulations
- Materials

# GATHERING INFORMATION

## Concept 1

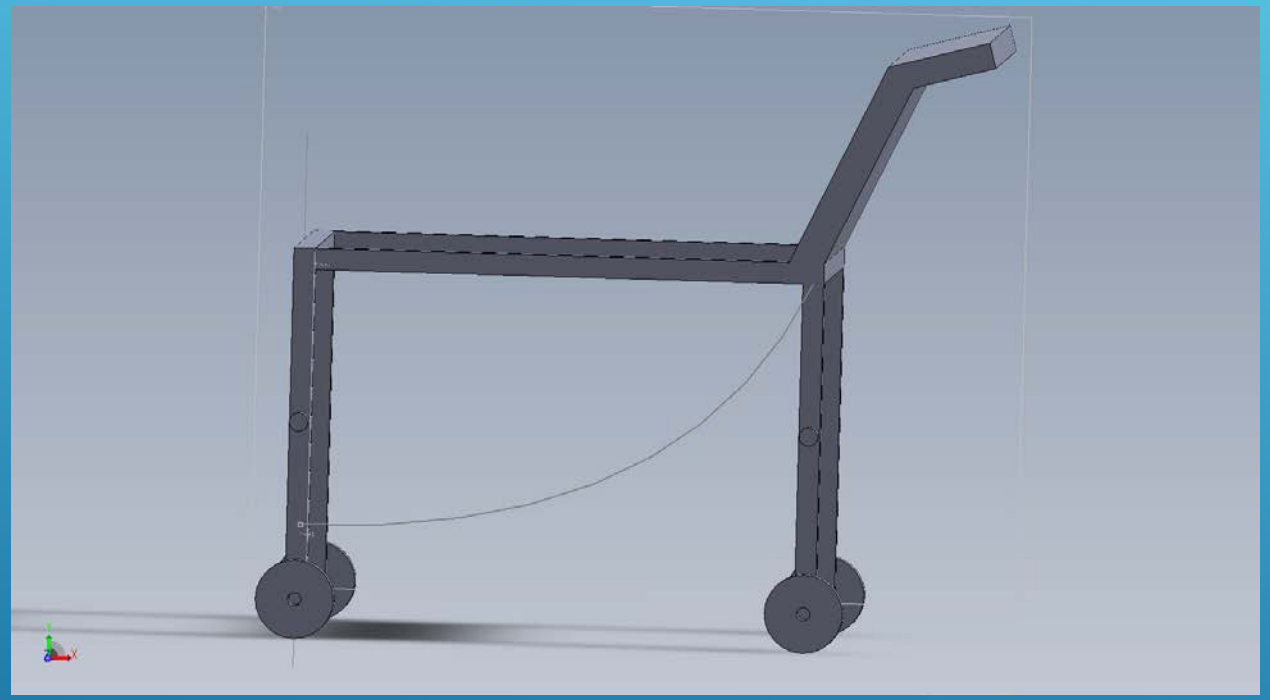

- Cables that allow the legs to easily be pulled up into the base of the design

# CONCEPT GENERATION

# Concept 2

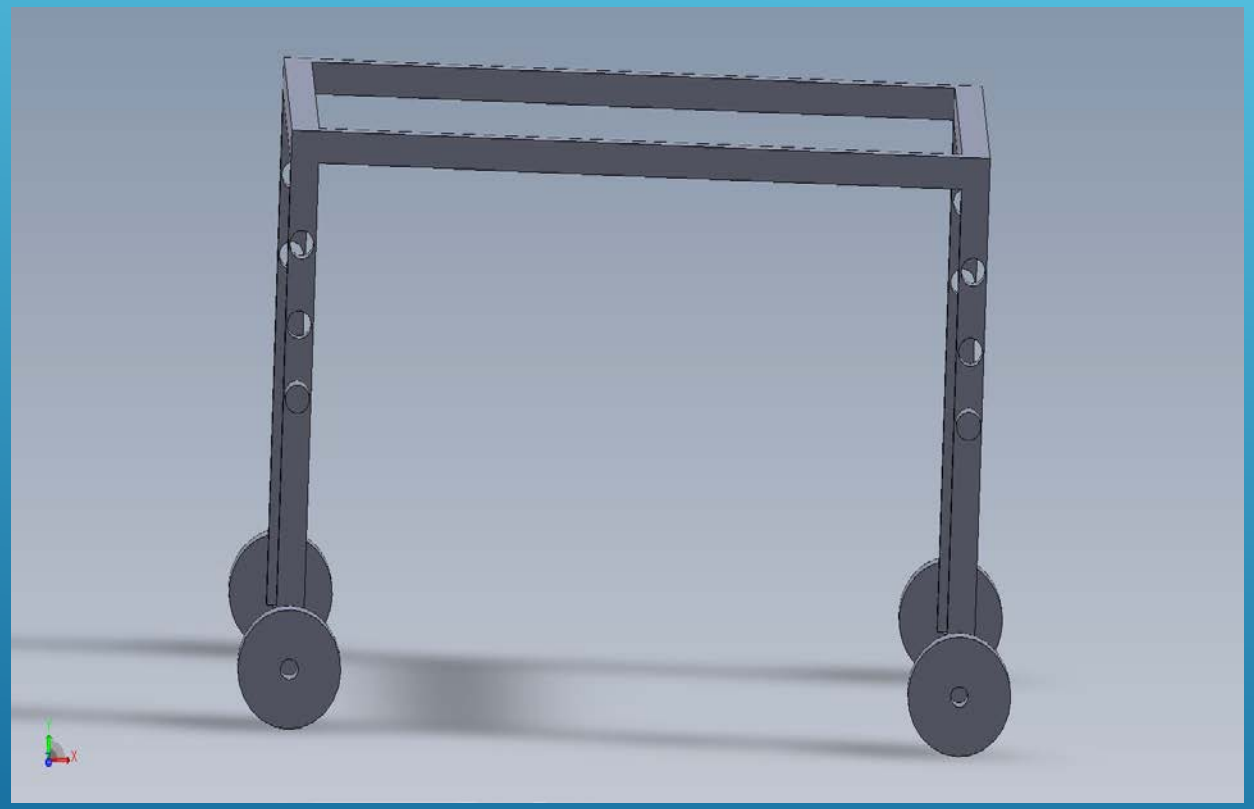

- Extendable legs similar to the handle of a suitcase.
- Parent could extend legs to desired height

# CONCEPT 3

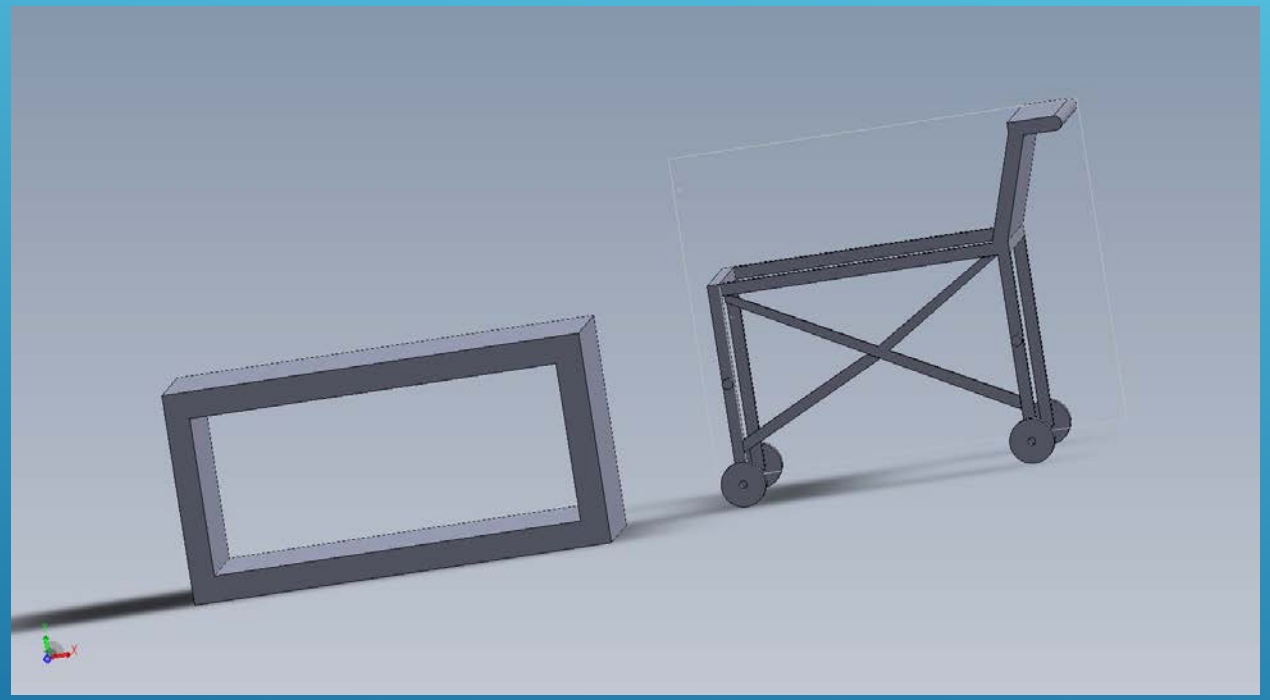

- Two part system car seat would connect into the frame of a stroller

# CONCEPT 4

- Similar to a scissor lift allowing adjustable height of the parent

# CONCEPT SELECTION PROCESS

| Selection Criteria | Cross-bar | Tension | Extendable | Two Parts | Cross-bar +Tension | Competitor A | Competitor B |
|---|---|---|---|---|---|---|---|
| Inexpensive | + | + | + | - | 0 | - | 0 |
| Safe | + | 0 | + | + | 0 | + | + |
| Ease of Transition | + | + | + | - | + | + | - |
| Space Effective | + | + | + | - | + | + | - |
| Lightweight | 0 | 0 | + | - | 0 | + | - |
| Appealing | + | + | - | + | + | + | + |
| Ease of Manufacture | 0 | - | + | 0 | - | - | - |
| Storage | + | 0 | 0 | 0 | + | - | + |
| Ease of Handling | + | + | + | + | + | + | + |
| Sum +'s | 7 | 4 | 7 | 3 | 5 | 6 | 4 |
| Sum 0's | 2 | 3 | 1 | 2 | 3 | 0 | 1 |
| Sum -'s | 0 | 1 | 1 | 4 | 1 | 3 | 4 |
| Net Score | 7 | 3 | 6 | -1 | 4 | 3 | 0 |
| Rank | 1 | 4 | 2 | 5 | 3 | | |
| Continue? | yes | Combine | | no | yes | | |

Concept Screening: Showed which concept should be continued

| | | Cross-Bar | | Extendable w/ Tension | | Cross-Bar w/ Tension | | Reference Competitor A |
|---|---|---|---|---|---|---|---|---|
| Selection Criteria | Weight | Rating | Weighted Score | Rating | Weighted Score | Rating | Weighted Score | Rating |
| Inexpensive | 10% | 3 | 0.3 | 2 | 0.2 | 3 | 0.3 | 1 |
| Safe | 10% | 3 | 0.3 | 2 | 0.2 | 2 | 0.2 | 4 |
| Ease of Transition | 25% | 4 | 1 | 4 | 1 | 4 | 1 | 4 |
| Space Effective | 5% | 4 | 0.2 | 4 | 0.2 | 4 | 0.2 | 4 |
| Light Weight | 10% | 4 | 0.4 | 4 | 0.4 | 3 | 0.3 | 4 |
| Appealing | 5% | 4 | 0.2 | 4 | 0.2 | 4 | 0.2 | 4 |
| Ease of Manufacture | 15% | 3 | 0.45 | 3 | 0.45 | 2 | 0.3 | 1 |
| Storage | 5% | 3 | 0.15 | 2 | 0.1 | 3 | 0.15 | 1 |
| Ease of Handeling | 15% | 4 | 0.6 | 3 | 0.45 | 3 | 0.45 | 4 |
| | Total Score | 3.6 | | 3.2 | | 3.1 | | |
| | Rank | 1 | | 2 | | 3 | | |
| | Continue? | Develop | | No | | No | | |

Concept Scoring: Help to choose the best concept

# QFD – Quality Function Deployment

Engineering Requirements

| Customer Requirements | Cost | Volume | Weight | Smoothness of Ride | Time of Transition | Time to Build | Safety Features | | A | B |
|---|---|---|---|---|---|---|---|---|---|---|
| Inexpensive | X | | | | | | | | A | B |
| Safe | | | | | | | X | | X | X |
| Ease of Transition | | | | | X | | | | X | |
| Space Effective | | X | | | | | | | X | |
| Lightweight | | | X | | | | | | X | |
| Appealing | X | | X | X | | | X | | X | X |
| Ease of Manufacture | | | | | | X | | | | |
| Storage | | X | | | | | | | | X |
| Ease of Handling | | | | X | X | | | | X | X |
| Unit | $ | $in^3$ | lbs | % | sec | days | % | | | |
| Value | ≤100 | 12 | <15 | 100 | <15 | <7 | 100 | | | |

Competitive Benchmarks

Engineering Targets

# FINAL DESIGN

# 2D DRAWING

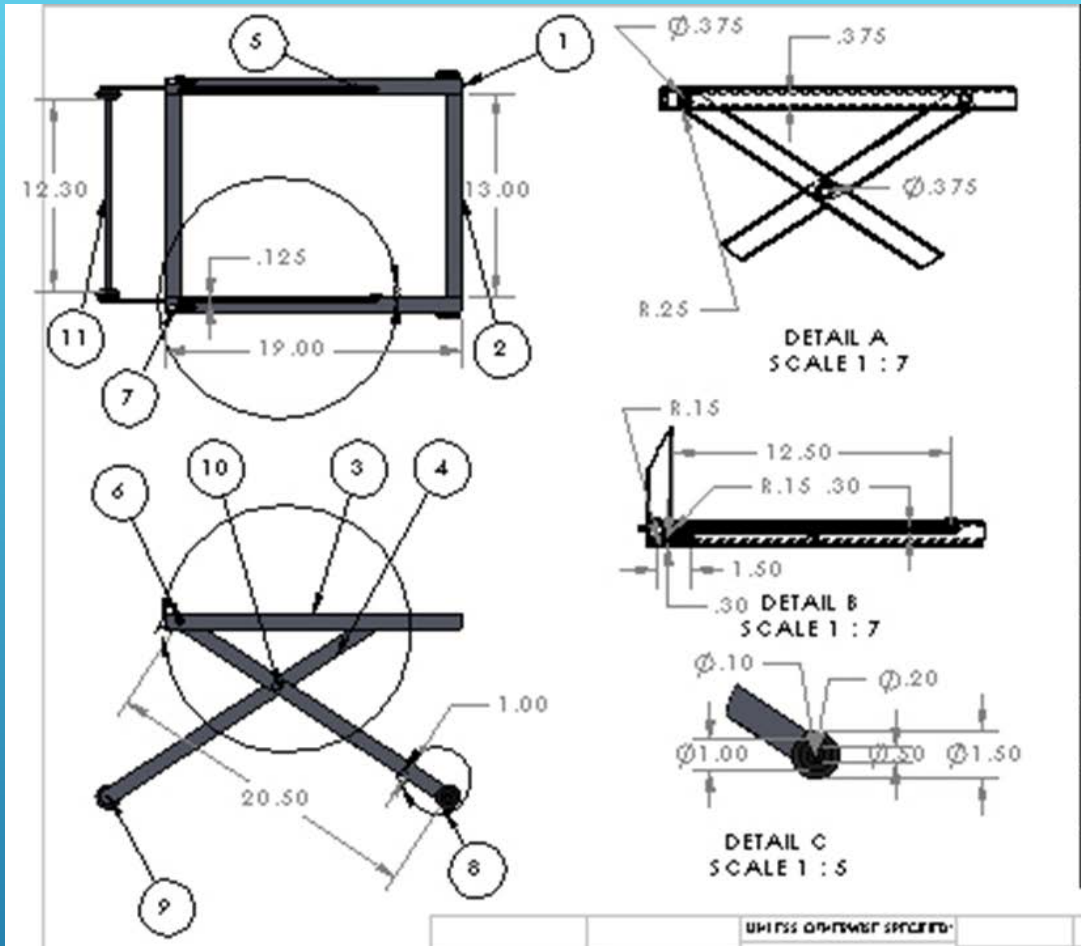


| ITEM NO. | PART NUMBER | DESCRIPTION | QTY. |
|---|---|---|---|
| 1 | Part 1 of final | LH 1.5 X 1 X 1 inch aluminum tube | 1 |
| 2 | Part 5 of final | 1/2 X 3/8 inch steel hitchpin | 2 |
| 3 | Part 6 of final | RH 1.5 X 1 X 1 inch aluminum tube | 1 |
| 4 | Part2 of final | 21 X 1 X 1/8 inch aluminum flat stock leg | 4 |
| 5 | clevis pin for slide | 1/2 ×3/8 inch steel hitch pin with large head | 2 |
| 6 | washer | 1/8 inch flat washer | 28 |
| 7 | pin for fixed leg | 3/4 X 3/8 inch steel hitch pin | 2 |
| 8 | silicon rubber wheels | 3 inch OD rubber wheels | 4 |
| 9 | Wheel Bushing | Stock wheel bushings | 8 |
| 10 | Roll Pin for Legs | 1/2 X 1/2 steel hitch pin | 2 |
| 11 | Part2 C | 12.5 X 3/8 inch aluminum tube | 1 |

TITLE:

SIZE A | DWG. NO. Stroller/Carseat | REV

SCALE: 1:10 | WEIGHT: | SHEET 1 OF 1

# STRESS ANALYSIS

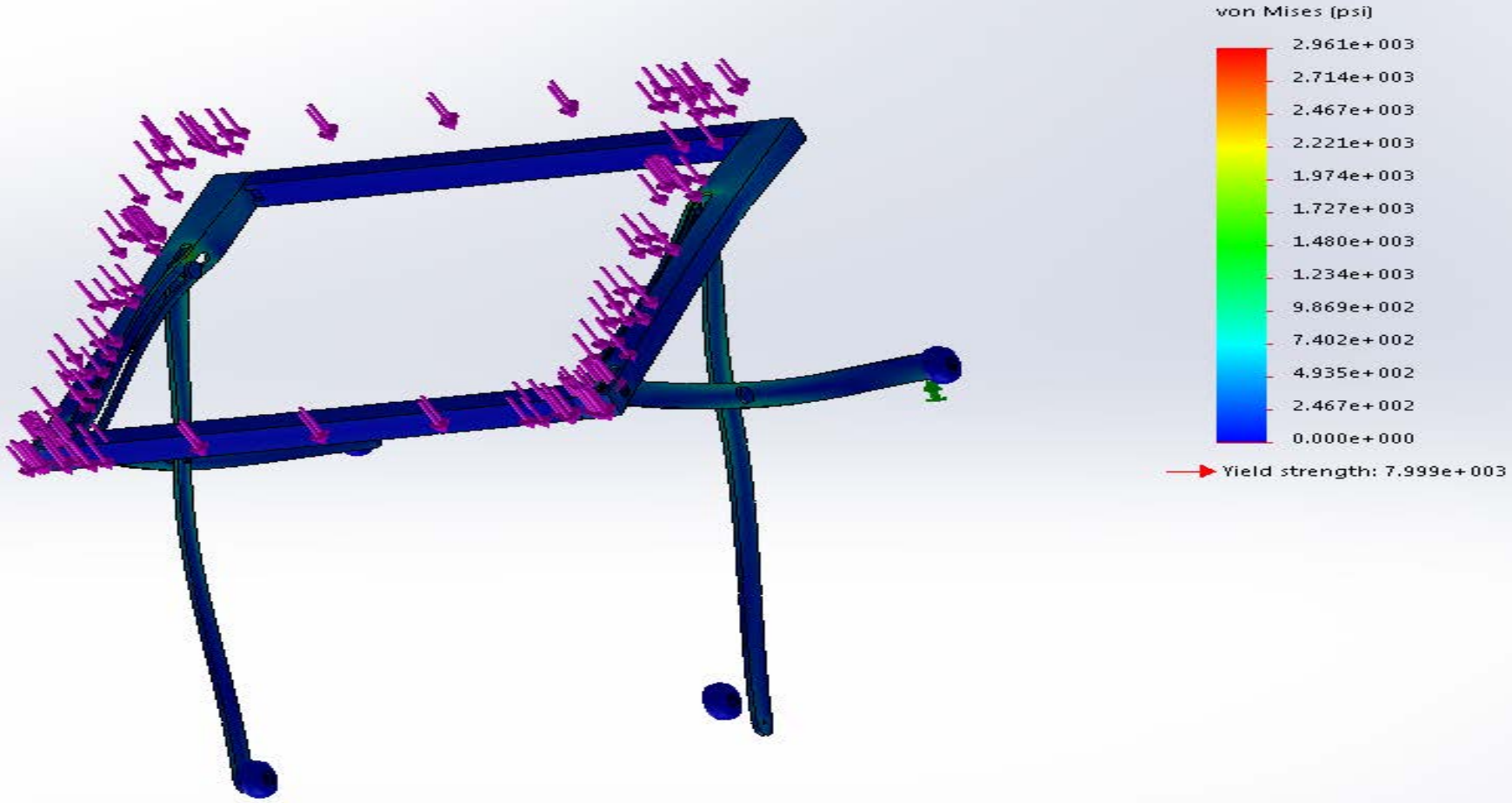


Educational Version. For Instructional Use Only

# MOTION STUDY

# BILL OF MATERIALS

| ITEM NO. | PART NUMBER | DESCRIPTION | QTY. |
|---|---|---|---|
| 1 | Part 1 of final | LH 15 X 1 X 1 inch aluminum tube | 1 |
| 2 | Part 5 of final | 1/2 X 3/8 inch steel hitchpin | 2 |
| 3 | Part 6 of final | RH 15 X 1 X 1 inch aluminum tube | 1 |
| 4 | Part2 of final | 21 X 1 X 1/8 inch aluminum flat stock leg | 4 |
| 5 | clevis pin for slide | 1/2 x 3/8 inch steel hitch pin with large head | 2 |
| 6 | washer | 1/8 inch flat washer | 28 |
| 7 | pin for fixed leg | 3/4 X 3/8 inch steel hitch pin | 2 |
| 8 | silicon rubber wheels | 3 inch OD rubber wheels | 4 |
| 9 | Wheel Bushing | Stock wheel bushings | 8 |
| 10 | Roll Pin for Legs | 1/2 X 1/2 steel hitch pin | 2 |
| 11 | Part2C | 12.5 X 3/8 inch aluminum tube | 1 |

# MATERIALS SELECTION

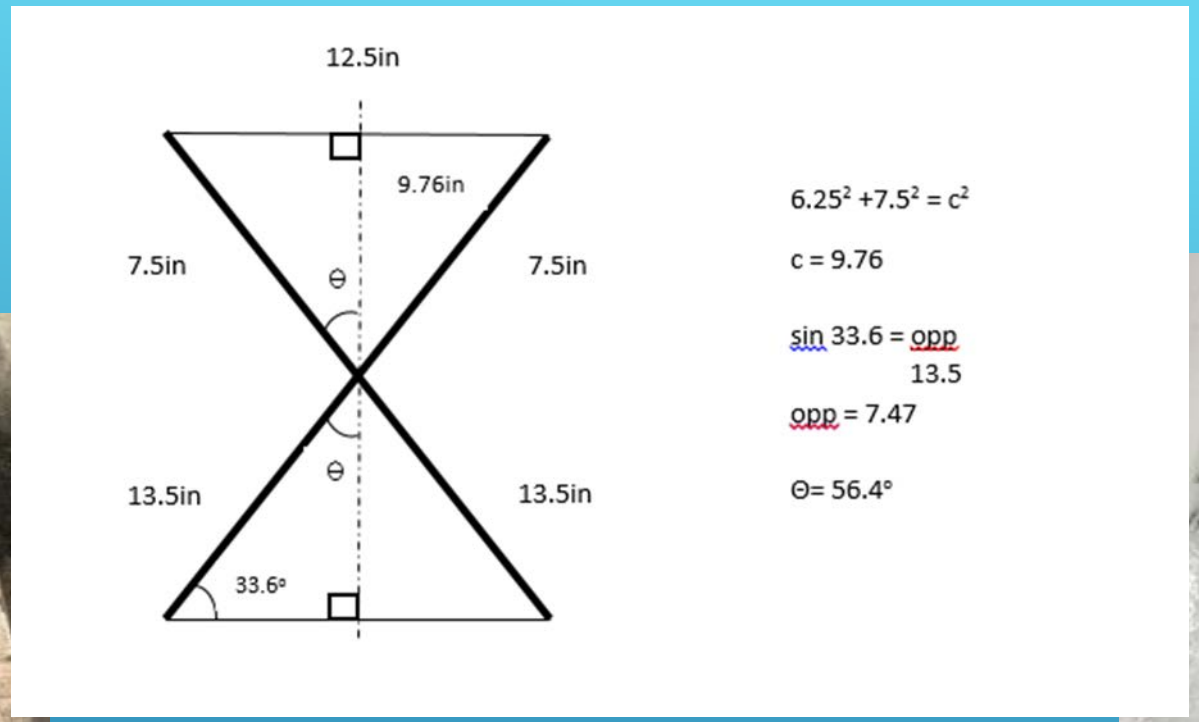

# PLANS FOR FABRICATION AND TESTING

# THE FINAL PRODUCT

# References


Hartshorn, Jessica. “Your Stroller Buying Guide.” Parents. Web. 3 Mar. 2016. <http://www.parents.com/baby/gear/strollers/stroller-buying-guide/ >.

"Stylus™ Click Connect™ Travel System.”, *Kendra™*. N.p., n.d. Web. 21 Mar. 2016. <http://www.gracobaby.com/products/pages/stylus-click-connect-travel-system-kendra-1913883.aspx>.

"Doona - Google Search." Doona - Google Search. Web. 03 Mar. 2016. https://www.google.com/search?q=doona >.

“Car seat Recommendations for Children.” *Parents Central*. NHTSA. n.d. Web. 25 April. 2016. < http://www.safercar.gov/parents/CarSeats/Right-Seat-Age-And-Size-Recommendations.htm >.

Ipatenco, Sara. “The Average Weight & Height of 2-Year-Olds.” *Livestrong.com*. Demand Media. 16 Jan. 2014. Web. 25 April 2016. < http://www.livestrong.com/article/148862-the-normal-weight-height-of-babies-at-age-2/ >.

# References Continued


Aldana, Karen. “NHTSA Releases New Child Seat Guidelines.” NHTSA. 21 Mar. 2011. Web. 25 April. 2016. <http://www.nhtsa.gov/About+NHTSA/Press+Releases/2011/NHTSA+Releases+New+Child+Seat+Guidelines >

“The Consumer Product Safety Improvement Act (CPSIA).” SaferProducts.gov. United States Consumer product Saftey Commission. 06 Dec. 2013. Web. 25 April. 2016. <http://www.cpsc.gov/en/Regulations-Laws--Standards/Statutes/The-Consumer-Product-Safety-Improvement-Act/>

“Carriages and Strollers Business Guidance.” SaferProducts.gov. United States Consumer Product Saftey Commission. n.d. Web. 25 April 2016. <http://www.cpsc.gov/en/Business--Manufacturing/Business-Education/Business-Guidance/Carriages-and-Strollers/>

“Steel.” aqua-calc conversions + calculations. n.d. Web. 25 April 2016. <http://www.aqua-calc.com/page/density-table/substance/steel>