Technical Memorandum
No. EDSGN100.002

Date: April 25, 2016

To: Lockheed Martin Corporation

From: EDSGN100 Section 002
Joint City
Mathias Haegele
James Lauer
Liam Raehsler
Meghan Williams

Subject: Penn State University
EDSGN 100: Introduction to Engineering Design
Client-Driven Design Project, Spring 2016

Purpose.

The purpose of this memorandum is to identify what our team hopes to accomplish in a clear, concise manner. The intention is to invent and construct an efficient mounting bracket to stabilize a 7-port USB hub.

Background.

Lockheed Martin issued the challenge to create a mounting bracket that firmly holds a 3.94” x 2.2” x 0.9” USB hub in place (Lockheed Martin Presention). The bracket must neutralize a certain level of turbulence while utilizing the fewest amount of parts possible. The bracket includes a cable retention clip to hold the wires in place. Our goal involving the retention clip is to utilize a device that allows for simple removal of the clip when cords must be added or removed with a minimum part count. The clip must also be a firm device that will not fail from a high level of disturbance. This task was assigned because the original 4-port USB hub in use was upgraded to a 7-port hub, so a modified mounting bracket and cable retention clip are required. The team discussed various design ideas and agreed on the best plan. The group collectively sketched each idea and listed potential benefits and downfalls of each structure, and ultimately came up with the most optimal solution for the Lockheed Martin requirements as specified in the statement of work.

Sponsor.

Lockheed Martin is an extremely large diverse company with headquarters in Bethesda Maryland, but has over 500 United States facilities as well as operating facilities in over 70 countries. The company employs around 115,000 people; 60,000 of those employees are engineers and scientists. Lockheed Martin specializes in: space systems, mission systems and

training, missiles and fire control, and aeronautics. Lockheed Martin is most famous for government contracting, but has holdings in a large variety of engineering endeavors.

Project Description.

EDSGN 100 was offered five options by Lockheed Martin, and was given the opportunity to choose any one project. The choices were a heat exchanger, a sensitive payload shock absorber, connector back shells, USB Hub mounting, or design for additive manufacturing. Team Joint City decided on the USB Hub mounting. The team decided this would be the best option due to the level of knowledge based on this particular product and the ability to effectively upgrade the mounting bracket. The new bracket must hold a 7-port hub, must be a vertical mount, a new cable retention must be designed, and has to be able to survive excessive vibrations.

Procedures.

To begin development of the improved USB mounting bracket, the team acquired the proper dimensions for the hub from the specifications page of the *D-Link* website and built a model of the hub seen in figure 2 using Solidworks. After an in depth analysis of the original design, which can be found in figure 1, the group met to brainstorm design ideas. Every team member brought great ideas to the table and explained why and how the designs met all the criteria in an effective yet simple fashion. After each idea was sketched and laid out for the rest of the group, the team discussed all the benefits and downfalls of each idea. The most challenging aspect upon which to decide was how to design a stable retention clip using the fewest amount of parts possible. The design with the most positive aspects and fewest flaws was selected as the final choice for our project.

Results and Discussion.

Through careful analysis of the challenge at hand, the team found that the best solution was to create a shell around the USB with a locking mechanism along either side intended to adjust the cable retention bar as seen in figure 4. This method was found to be the most effective plan because the locking hooks kept the clip secure while placed under high levels of turbulence. Another important benefit for the cable retention clip design was that it was only two parts, which provided a major advantage to the challenge to utilize as few parts as possible as seen in graph 1. Measurements for the width required for the retention bar prongs were attained from Thorlabs Cable Racks Listing. The body of the bracket consisted of a floorless shell surrounding the USB hub with small bars on the top and bottom so as to prevent the hub from sliding out while also allowing easy access to the ports. On either side, a platform extrudes from the shell with four holes for screwing the bracket to a base. At first, the design appeared to be a perfectly executed solution to the challenge the group faced, but a major problem was soon made clear: the retention clip could fall off if the mounting bracket was flipped upside-down. Discovering the mistake early, the team added upper and lower tracks for each side of the retention clip so that the mounting bracket could be flipped upside-down and remain attached to the shell as accentuated in figure 5. With this addition included, the design was complete as visualized in figure 3. The group collectively evaluated the Solidworks model of the assembly. The bracket

consisted of nearly half the amount of total parts used in the original model and the ports were much more accessible due to the fact that the retention clip could easily be removed, replaced and adjusted.

Conclusions and Recommendations.

In conclusion, the team successfully engineered an improved USB hub mounting bracket that accurately fit all the requirements. The new and improved design exhibits simplicity but effectiveness and achieves all the goals expected from Lockheed Martin and ourselves. We are very grateful for the opportunity given to us by Lockheed Martin and would be more than willing to assist in any future projects that require our engineering expertise.

For more information, please contact team member Liam Raehsler at (814) 319-4343.

References.

I. Statement of Work for Project #4: USB Hub Mounting Bracket
II. Thorlabs Inc. Cable Racks Listing https://www.thorlabs.com/newgrouppage9.cfm?objectgroup_id=2389
III. Lockheed Martin Presentation (14 March 2016).

Attachments.

Graph No. 1 and Figure Nos. 1, 2, 3, 4, and 5 are attached.

*****

GRAPH 1
Parts Comparison Graph

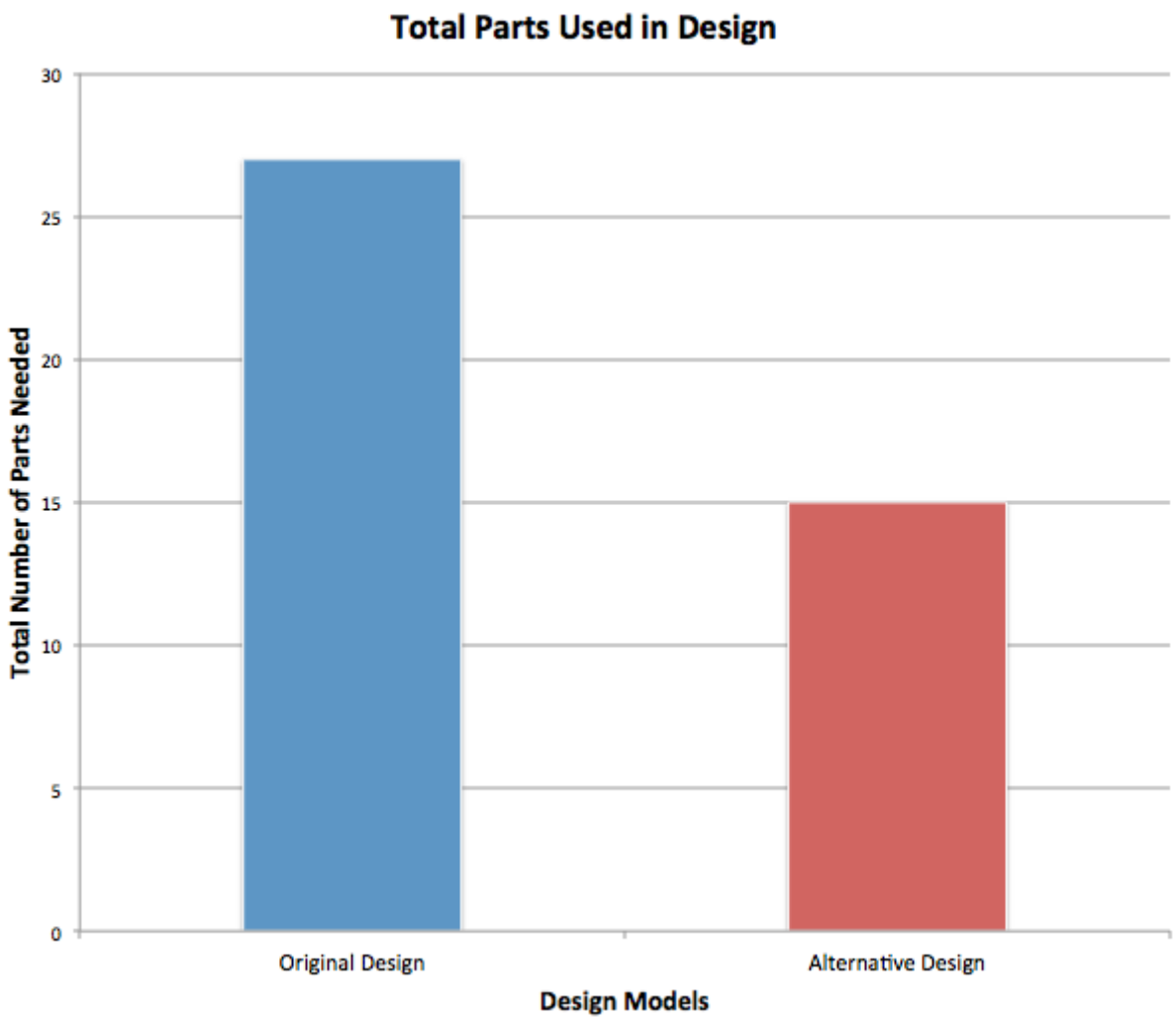

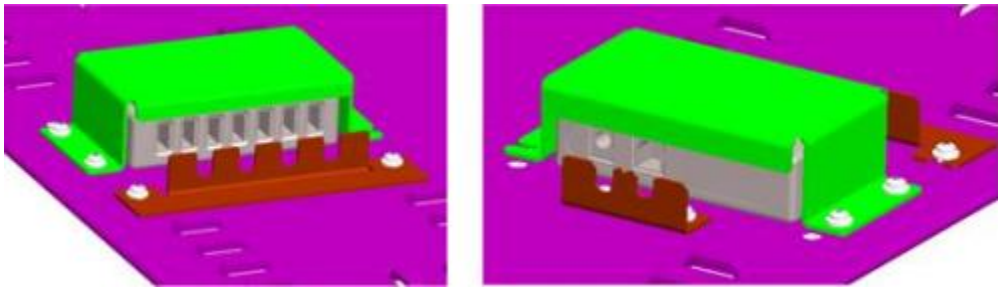

Figure 1. Original design for the USB mounting bracket and retention bars.

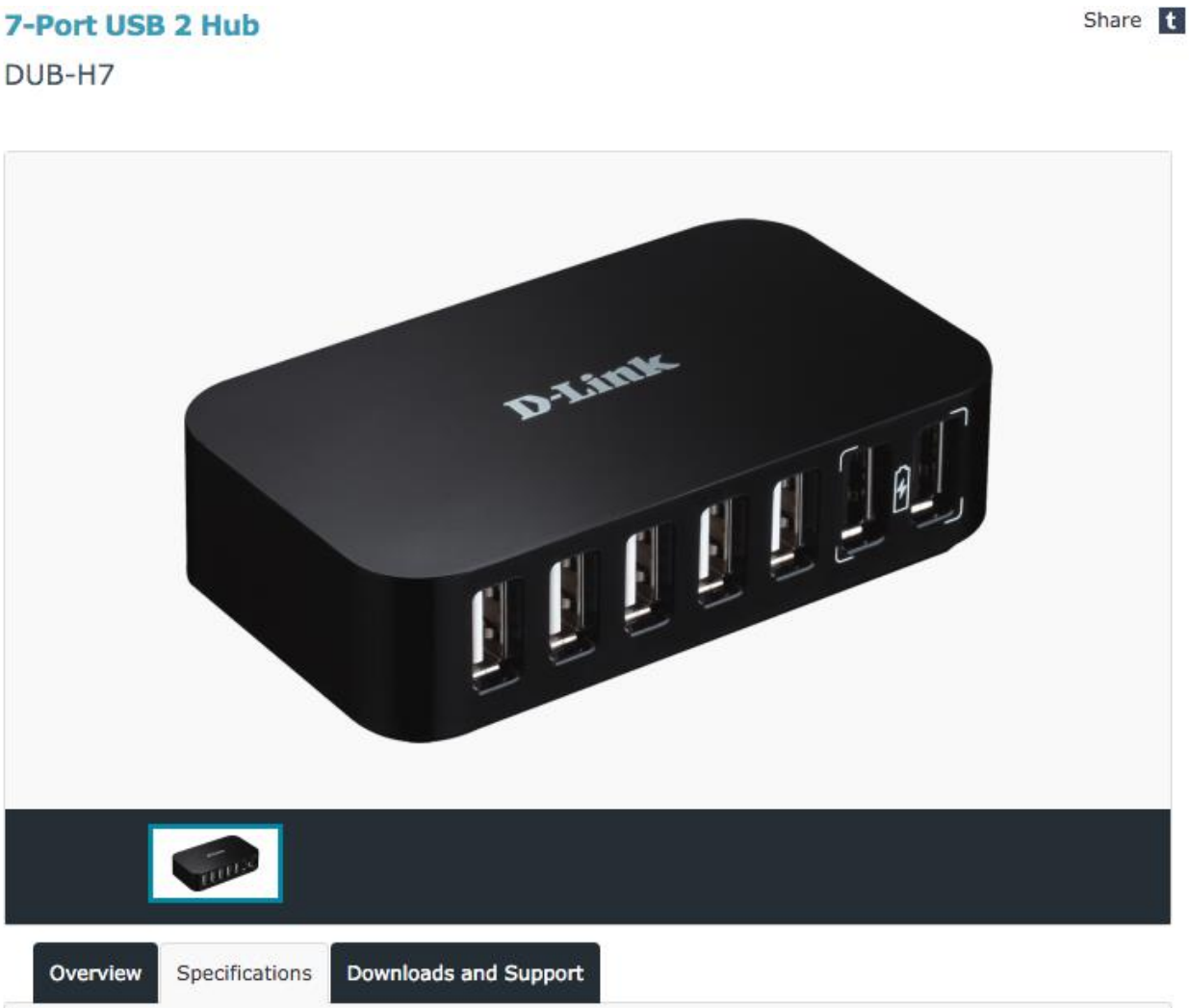

Figure 2. 7 Port USB Hub the bracket is designed for.

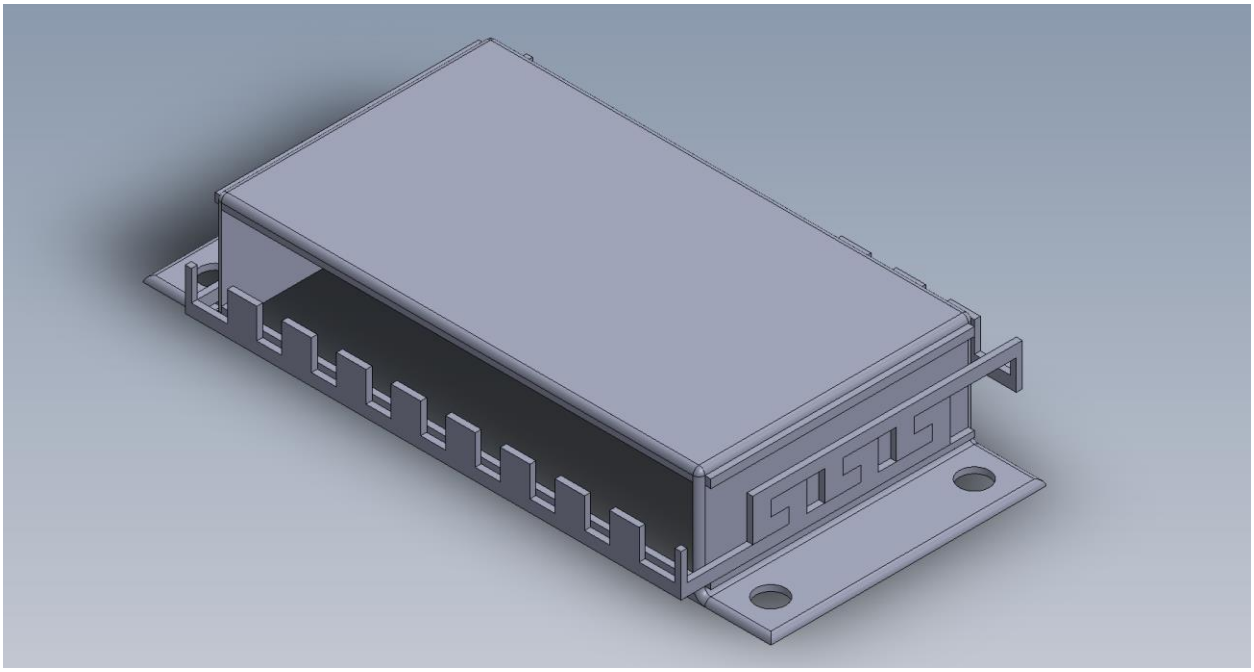

Figure 3. Isometric view of the alternative design.

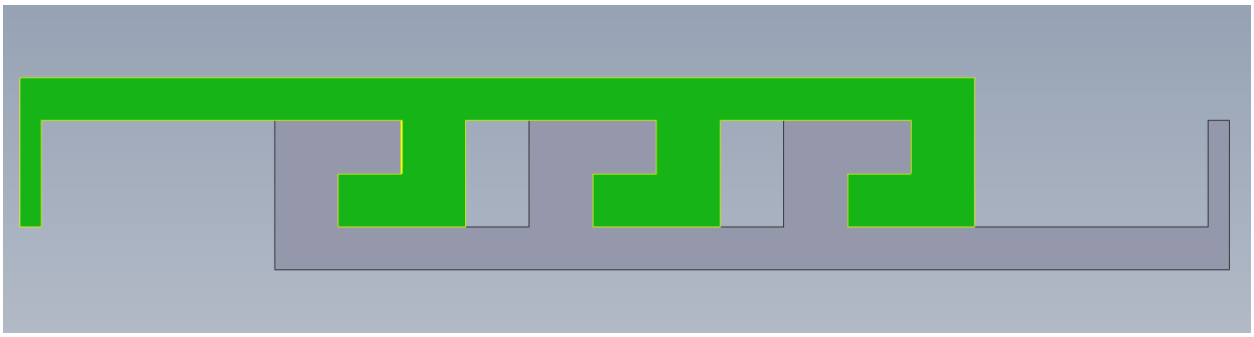

Figure 4. Hook design locking mechanism connected to the cable retention bars.

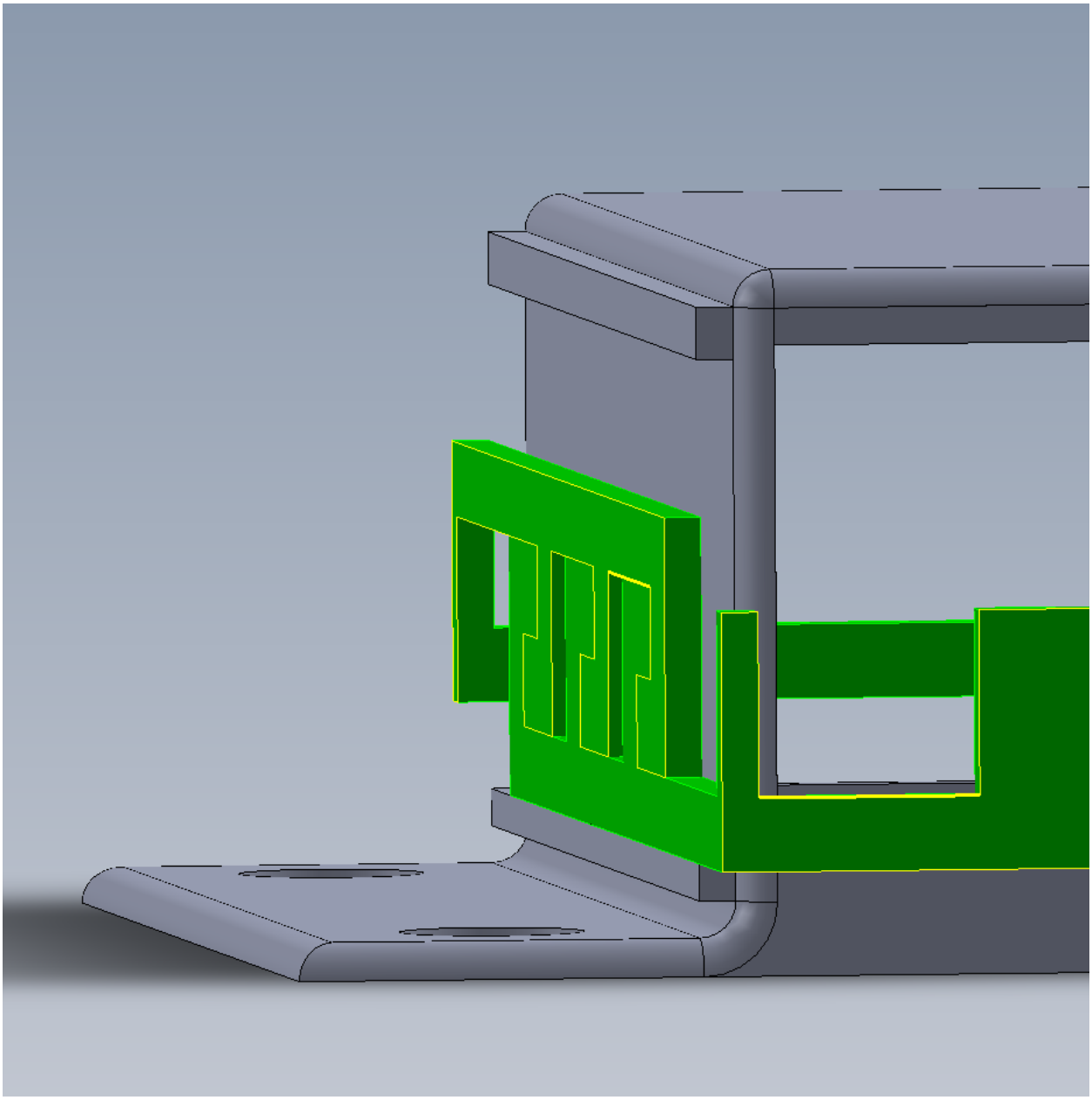

Figure 5. Hook locking mechanism with upper and lower tracks.