EDSGN 100: Introduction to Engineering Design 100
Section 009, Team #7
DESIGN PROJECT 1
Xinli #1 Dumpling Machine

Submitted by: Patrick Chour, Jeff Huo,
Jigar Patel, Yotsawat Sangteerasintop
Submitted to: Xinli Wu

Fall 2015

Abstract

The objective is to create a dumpling machine that makes at least 10 dumplings per minute from pre made ingredients. The machine should be a reasonable size, should not exceed $200 in price, and should be easy to clean and maintain. This report details the engineering process that our group followed in the design of this machine.

Table of Contents

Title page…….
Table of Contents…….i
Abstract(Jeff Huo)……..….1
Introduction(Patrick Chour)……..……..……....2
Design Description(Yotsawat Sangteerasintop and Jeff Huo)…….…….. 2
Design Approach (Jigar Patel and Jeff Huo)……...3
Final Design(Jigar Patel and Jeff Huo)……..…….……3
Engineering Analysis(Jeff Huo and Yotsawat Sangteerasintop)...…....…….……3
Conclusion(Yotsawat Sangteerasintop and Patrick Chour)…….……...….. 4

Introduction

Professor Xinli Wu presented a project to Team 7 to create a dumpling maker machine. Our group, Team 7 created the Xinli Number 1 to meet all of the professor's requirements. The subjects presented in this document shows the process that Team 7 had to go through in order to design the most capable dumpling maker machine.

Design Description

Problem Statement:

Dumplings are costly and time-consuming to produce by hand in today's fast paced society, so there is a high demand in the market, especially among Asian restaurants. Making dumplings by hand is also an issue since a large amount of workforce is needed. Automatic dumpling makers are usually very expensive, with most of them costing thousands of dollars.

Mission Statement:

The mission for Team 7 was to design the dumpling maker that are able to produce dumplings quickly and efficiently while maintaining a consistent quality and minimizing the margin of error from product to product. Team 7 also want it to be less expensive than the top dumpling makers on the market to remain competitive.

Design Specifications:

- The dumpling maker should be automatic or semi-automatic.
- The dumpling maker should produce no less than 10 dumplings per minute on average.
- The material cost for the dumpling maker should not exceed $200 unless it can be justified.
- The dumpling maker should be as safe as a food processor, easy to maintain, safe to use, and dishwasher safe.

Design Approach

Gantt Chart

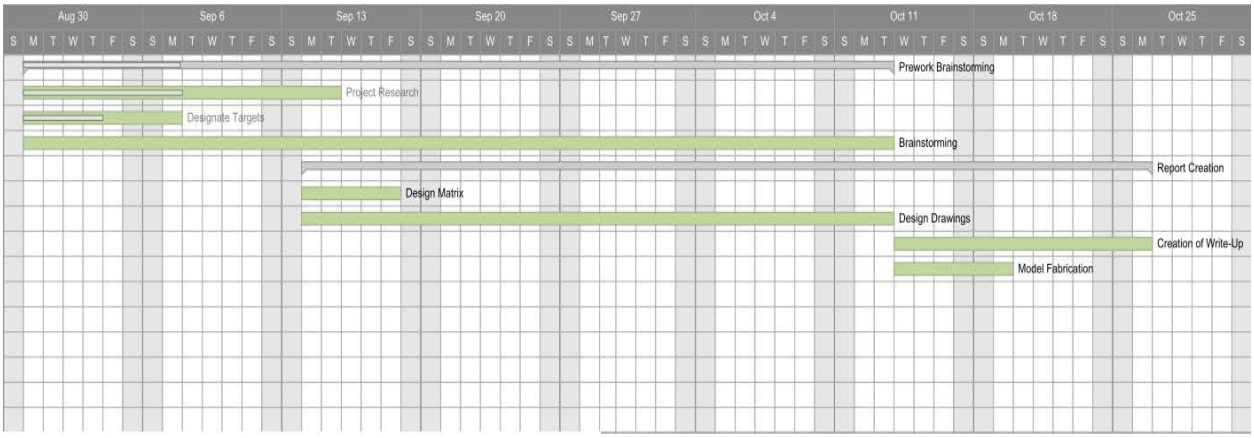

Fig. 1 Gantt Chart

Customer Needs Assessment

A total of five stores were consulted in the design process. The stores were asked to name the top criterion that they were looking for were ease of use, quality of product, and cost, among others.

The top criterion that were named were, in order of importance,

- taste of product
- cost
- ease of use
- size

Concept Generation

Team 7's dumpling maker was inspired by videos of dumpling makers on the website *YouTube* as well as the television show *How It's Made*. During the brainstorming section of the design process, the group came up with a single primary design which ended up becoming the final design, and multiple other designs whose aspects were taken and put into the final design. The greatest challenge was making a machine that is automatic and around the $200 price limit, since most of the example dumpling machines found online were several thousands of dollars.

Selection Matrix

Selection Criteria	Designs			
	Design 1	**Design 2**	**Design 3**	**Design 4**
Ease of use	3	3	3	4
Ease of manufacture	4	3	2	1
Taste of product	4	4	4	4
Size	4	2	1	2
Ease of maintenance	4	3	2	2
Total	**19**	**15**	**12**	**13**
Rank	**1**	**2**	**4**	**3**
Continue?	**Yes**	No	No	No

Table 1

Final Design and Prototype

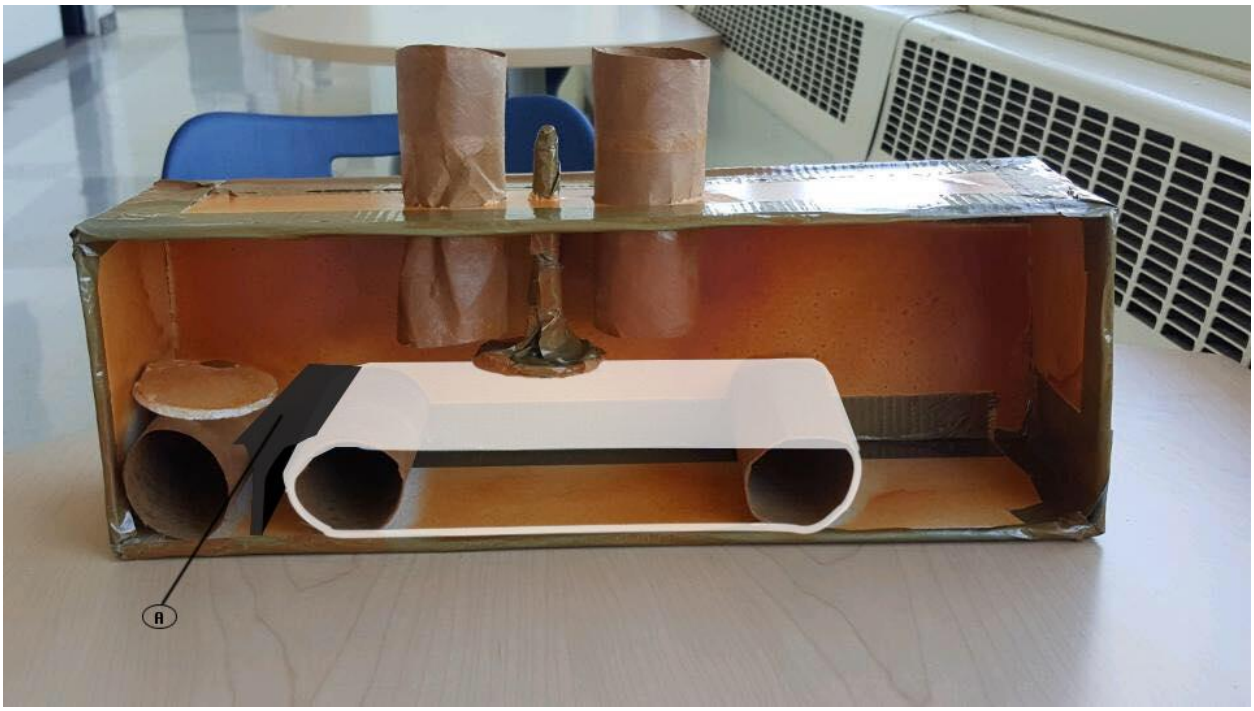

Fig 2. The Prototype

This was the final design that went through the development. There were certain parts that were not built into the model for the ease of presentation which were later added through other digital means. The digitally generated parts are the conveyor belt in white and the bridge in grey (Part A). The bridge is there to peel off the dumpling wrapper that already has the filling on it off of the conveyor belt and direct it towards the clamping mechanism that can be seen on the far left with a circular disc on top. The top of the bridge will be manufactured to be very smooth in order to ensure that the dumpling gets across with minimum window of error.

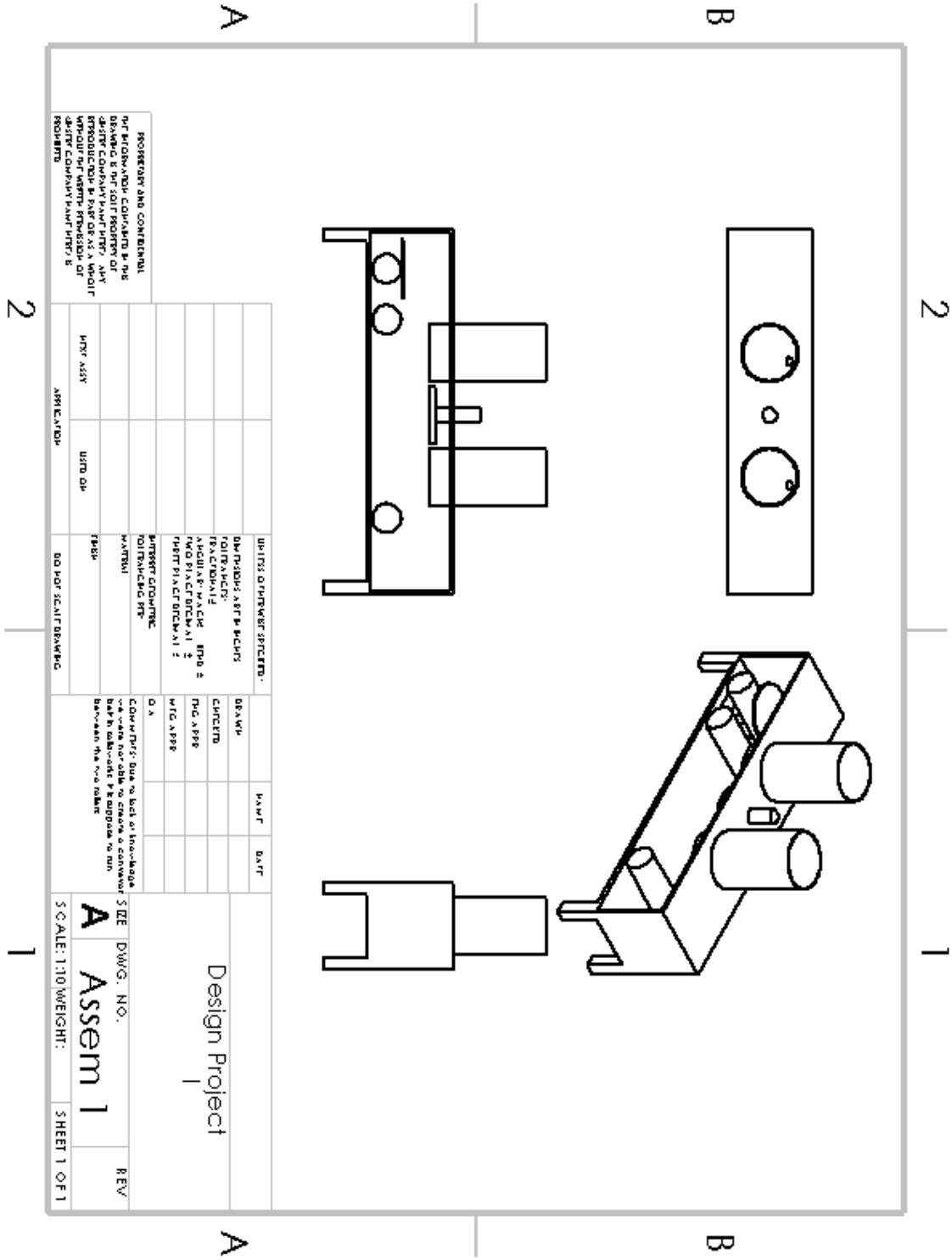

Fig 3 SolidWorks Drawing

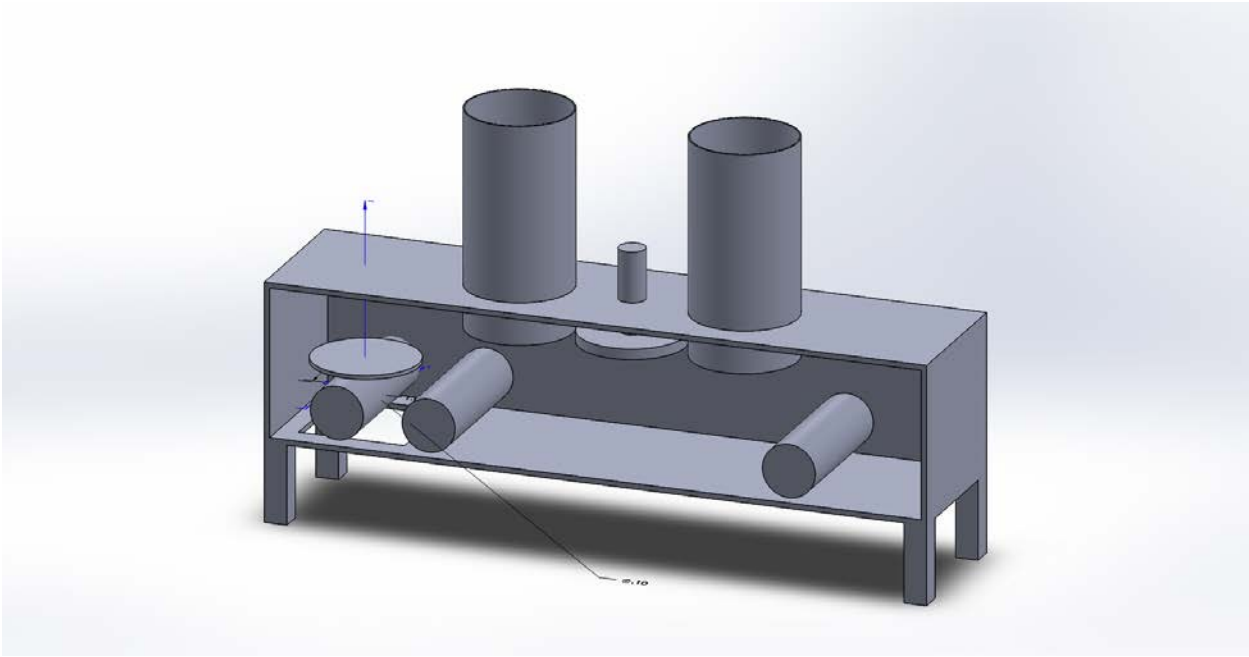

Fig 4 3D Model

Operation Instructions

1. Lightly dust the conveyor belt and the clamp on the inside of the machine with flour.
2. Place the dough and the filling of choice inside the removable containers.
3. Affix the corkscrews to the bottom of the removable containers.
4. Place the containers inside the indentations in the machine, making sure to line up the drive shaft with the motor receiver and the holes in the container and the machine. Put the dough container in the indentation opposite the dispenser and the filling container in the indentation closest to the dispenser.
5. Place another container below the dispenser to catch the completed product.
6. Turn on the machine.

Engineering Analysis

Working Mechanism

In the dough container, a corkscrew mechanism operated by a motor forces the dough through a hole. The tube of dough is cut by a pair of cutters operated by separate motor at intervals controlled by a microcontroller. The pieces of dough fall onto a conveyor belt which takes the dough underneath a presser. The reciprocating motor-powered presser flattens the pieces of dough while moving down at intervals controlled by the microcontroller and sprays water on the edges of the flattened dough while moving up. The conveyor belt then takes the flattened dough under the second container, in which filling is dispensed in the center of the dumpling skin in a similar method to the dough container mechanism. Finally, the dumpling is completed when the dough and filling approach the end of the conveyor belt and slide onto a motor-powered clamping mechanism on top of a roller. The clamp closes in intervals controlled by the microcontroller and the roller makes the clamp turn over, allowing the finished product to fall out of the machine through a dispenser hole on the bottom.

Cost Analysis

Item	Quantity	Cost ($)	Subtotal ($)
Rubber Conveyor Belt	1	6.00	6.00
Motor	1	47.99	47.99
Cutter	1	28.99	28.99
Presser	1	9.99	9.99
Removable Container	2	3.99	7.98
Mixer	1	17.42	17.42
Clamp	1	1.95	1.95
Roller	3	6.99	20.97
Total Cost	141.29		

Table 2

Some of the possibilities that could reduce the total cost of Xinli #1 dumpling machine would be the cost of the dough cutter. There are various options for Team 7 to choose, but the main purpose that we choose the current model is because of the material and endurance. Team 7 can find a closely comparable one if the dumpling machine really need to be reduced. The motor

is also another option that Team 7 can find a closely comparable to the version. Though, in today's market, the motor would be a tough search for team 7, though, reducing the total cost might be possible, team 7 would stick to the current model for the purpose of the motor capacity and power.

Conclusion

Team 7's dumpling machine was created to achieve goals which included simplicity and cost efficiency. After discussing and brainstorming about the design and feature of the dumpling machine, Team 7 contacted five different Chinese restaurants locally and internationally. The response from these Chinese restaurants were similar, following the same trend with simplicity, price, and efficiency as the most important features these restaurants are looking for. Our dumpling machine can make 12 dumplings per minute and the machine is customizable to different accessibilities. Team 7 cut out the unnecessary creative parts from the machine in order to make Xinli Number 1 able to be cheap and affordable to customers from any type of industry whether it is home use or restaurant use. Ultimately, the Xinli Number 1 dumpling maker is capable of achieving the goals of every customer and is thoroughly thought and planned out from an engineer's standpoint.

References

1. academy.com (2015), “Kingsford® Hamburger Presser,” Academy Sports and Outdoors.
2. amazon.com (2015), “KitchenAid KFE5T Flex Edge Beater for Tilt-Head Stand Mixers,” Amazon.
3. blowermotorsplus.com (2007-2015), “Ametek 119550-00 Vacuum Drive Motor,” Blower Motors Plus.
4. amazon.com (2015), “Smart ® Aero Space Aluminum Airtight Cylinder Storage Stash Case in Colors”, Amazon.
5. eBay.com (2015), “65mm Diameter Transparent Dumpling Mold,” eBay.
6. eBay.com (2015), “8.7” Wood Rolling Pin Bakery Roller,”
7. idea2products (2007), “Automatic Dumpling Maker, YouTube.
8. Woodward Crossing Country Basics, “6” 3 Ply Thresher, Conveyor, Baler Belting ~ Priced per Foot.”