EDSGN 497K Final Project

Jinghuan Tang

Oak Chair

Assembly Drawing:

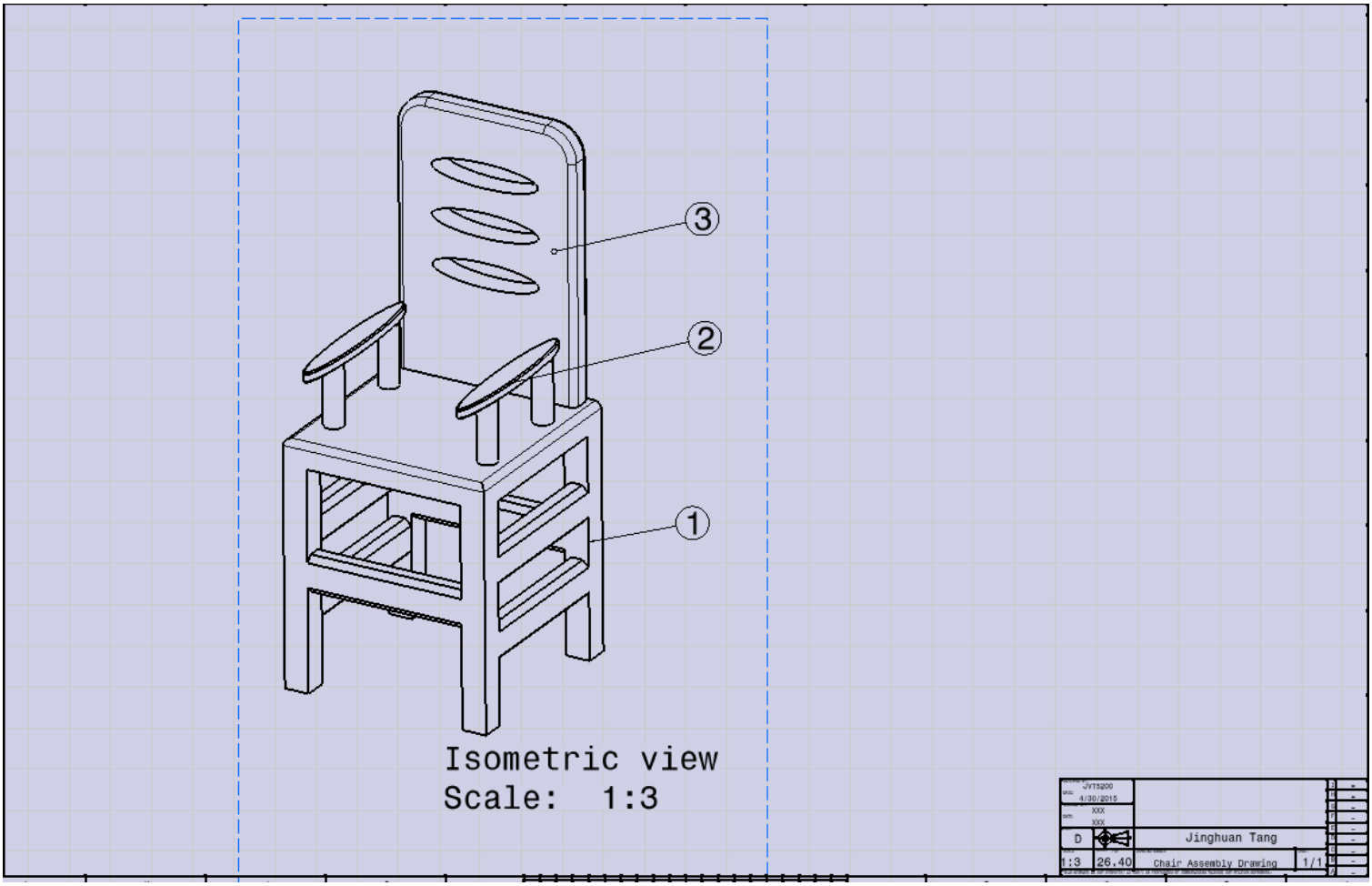

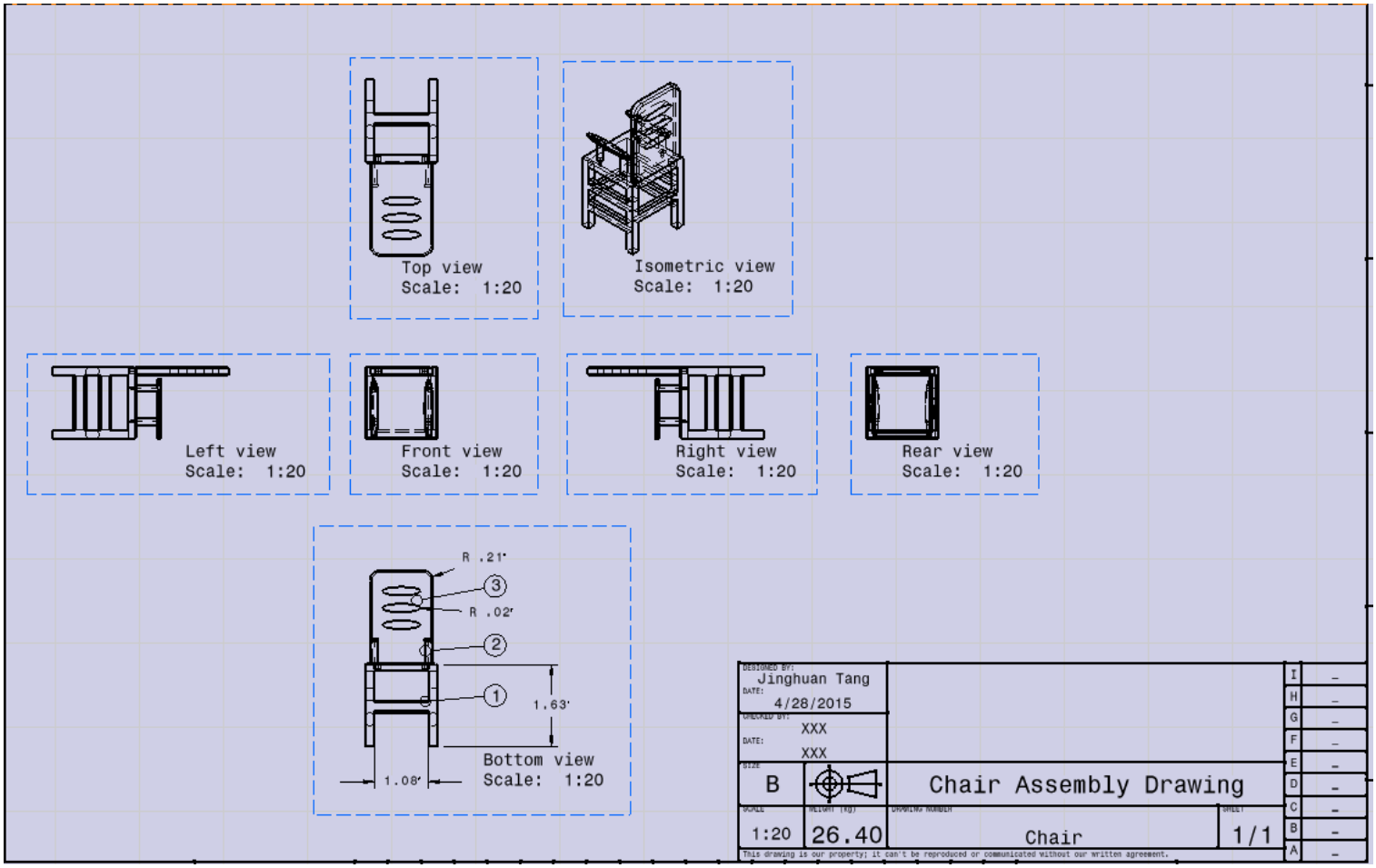
Top view
Scale: 1:20
Isometric view
Scale: 1:20
Left view
Scale: 1:20
Front view
Scale: 1:20
Right view
Scale: 1:20
Rear view
Scale: 1:20
R .21"
R .02"
3
2
1
1.63"
1.08"
Bottom view
Scale: 1:20
DESIGNED BY:
Jinghuan Tang
DATE:
4/28/2015
CHECKED BY:
XXX
DATE:
XXX
SIZE
B
Chair Assembly Drawing
SCALE
1:20
WEIGHT (kg)
26.40
DRAWING NUMBER
Chair
SHEET
1/1
This drawing is our property; it can't be reproduced or communicated without our written agreement.
I
H
G
F
E
D
C
B
A

Detail Drawing:

Chair Seat:

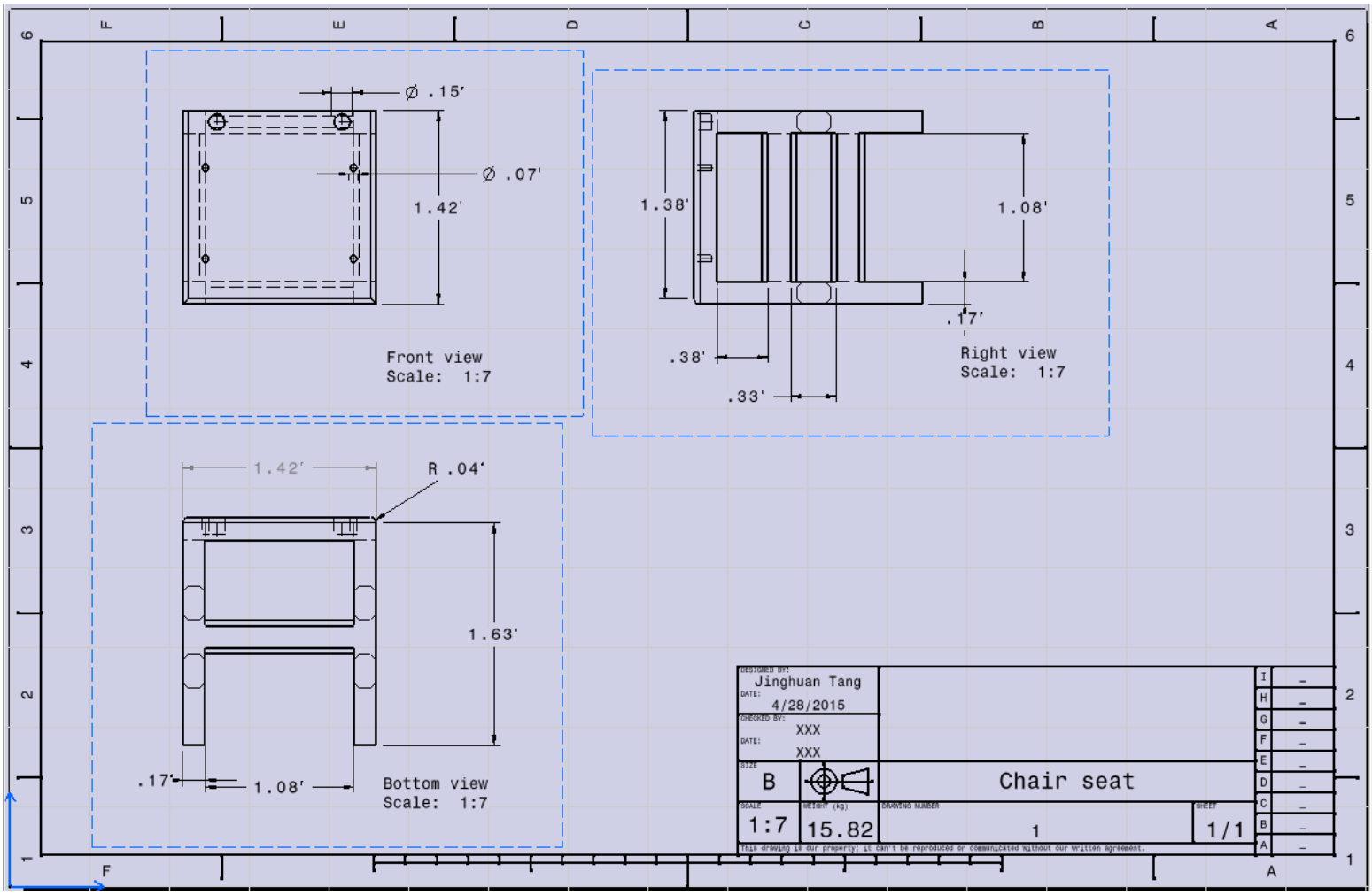

Chair Handle:

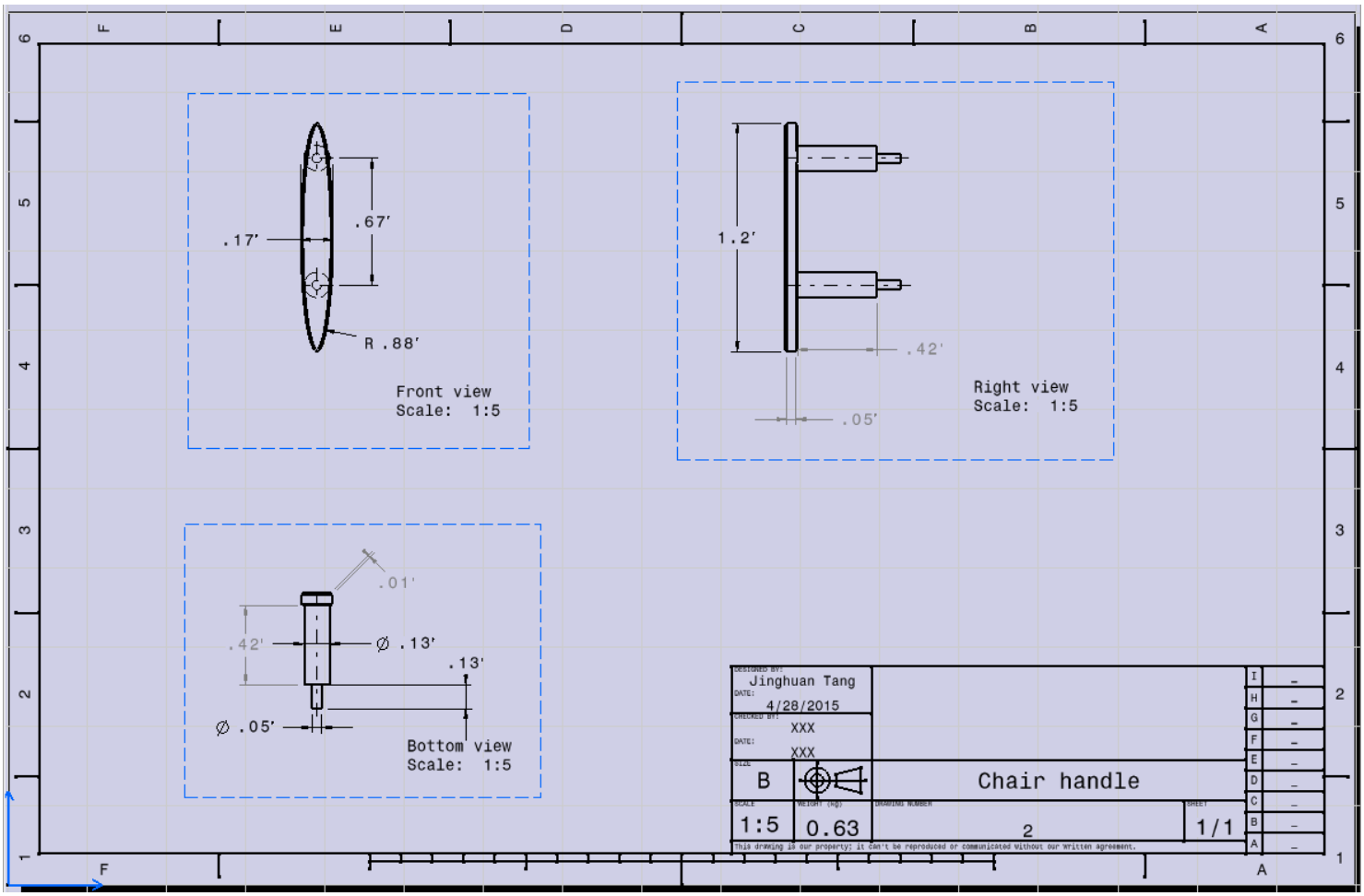

Chair Back:

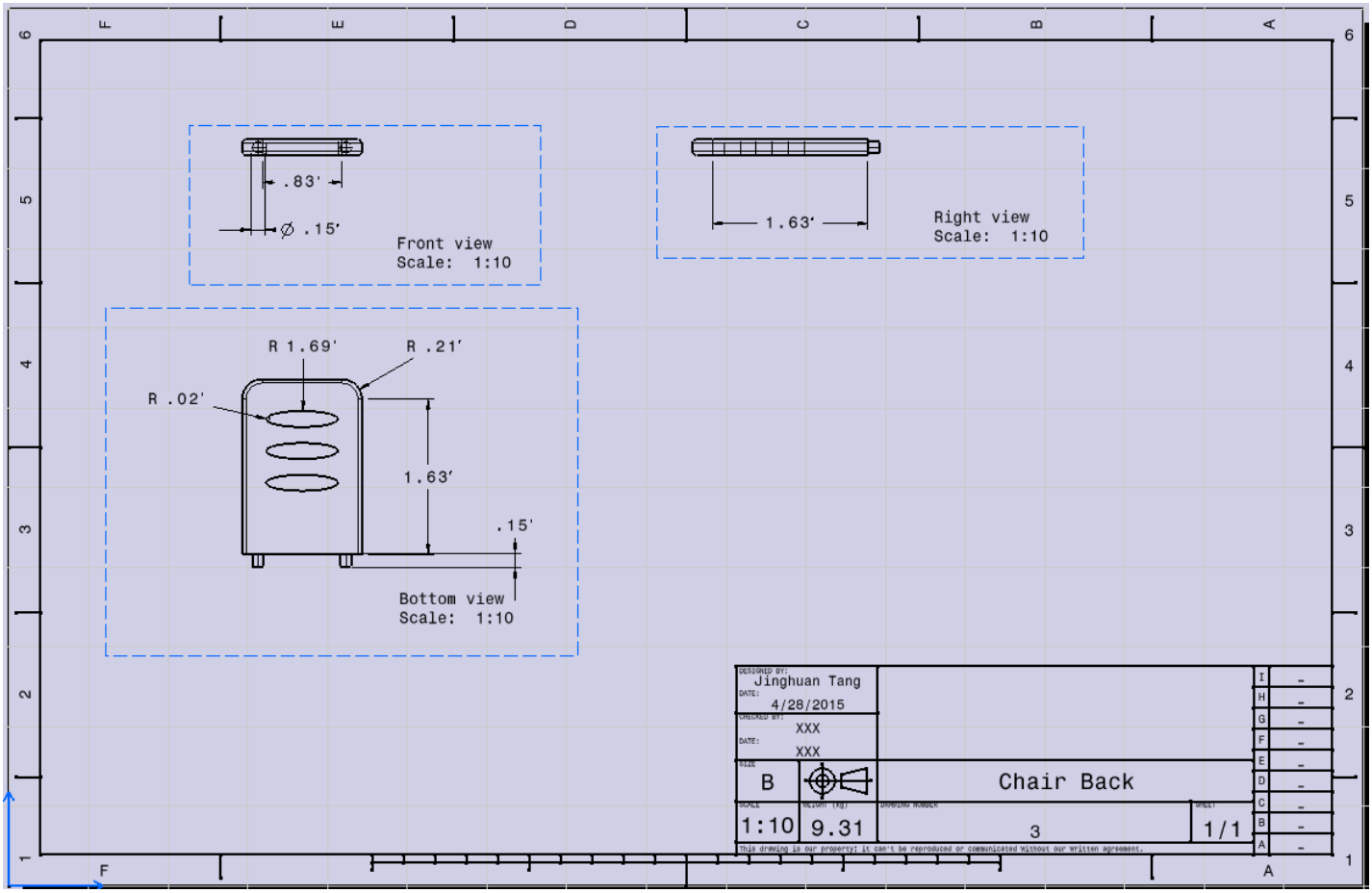
.83'
Ø .15'
Front view
Scale: 1:10
1.63'
Right view
Scale: 1:10
R 1.69'
R .21'
R .02'
1.63'
.15'
Bottom view
Scale: 1:10
DESIGNED BY: Jinghuan Tang
DATE: 4/28/2015
CHECKED BY: XXX
DATE: XXX
SIZE B
Chair Back
SCALE 1:10
WEIGHT (kg) 9.31
DRAWING NUMBER 3
SHEET 1/1
This drawing is our property! it can't be reproduced or communicated without our written agreement.

3-D solid model:

Front view

Left view

Top view

FEA Report:

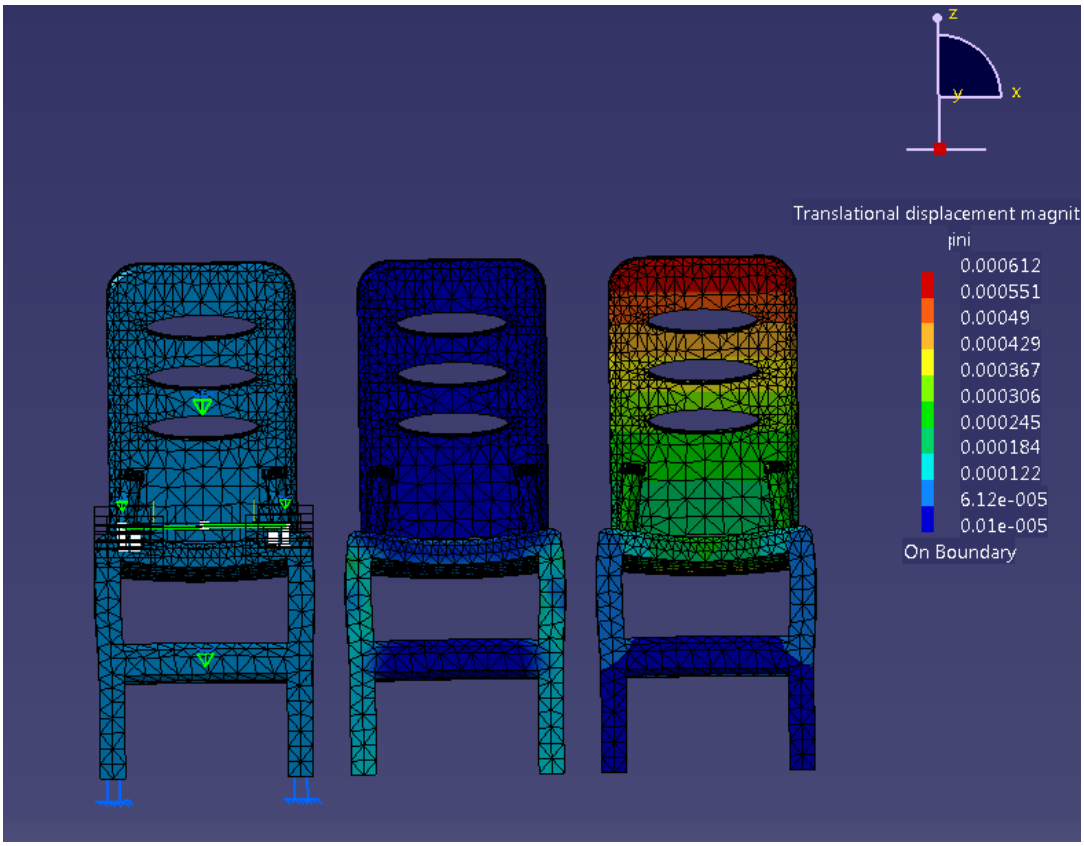

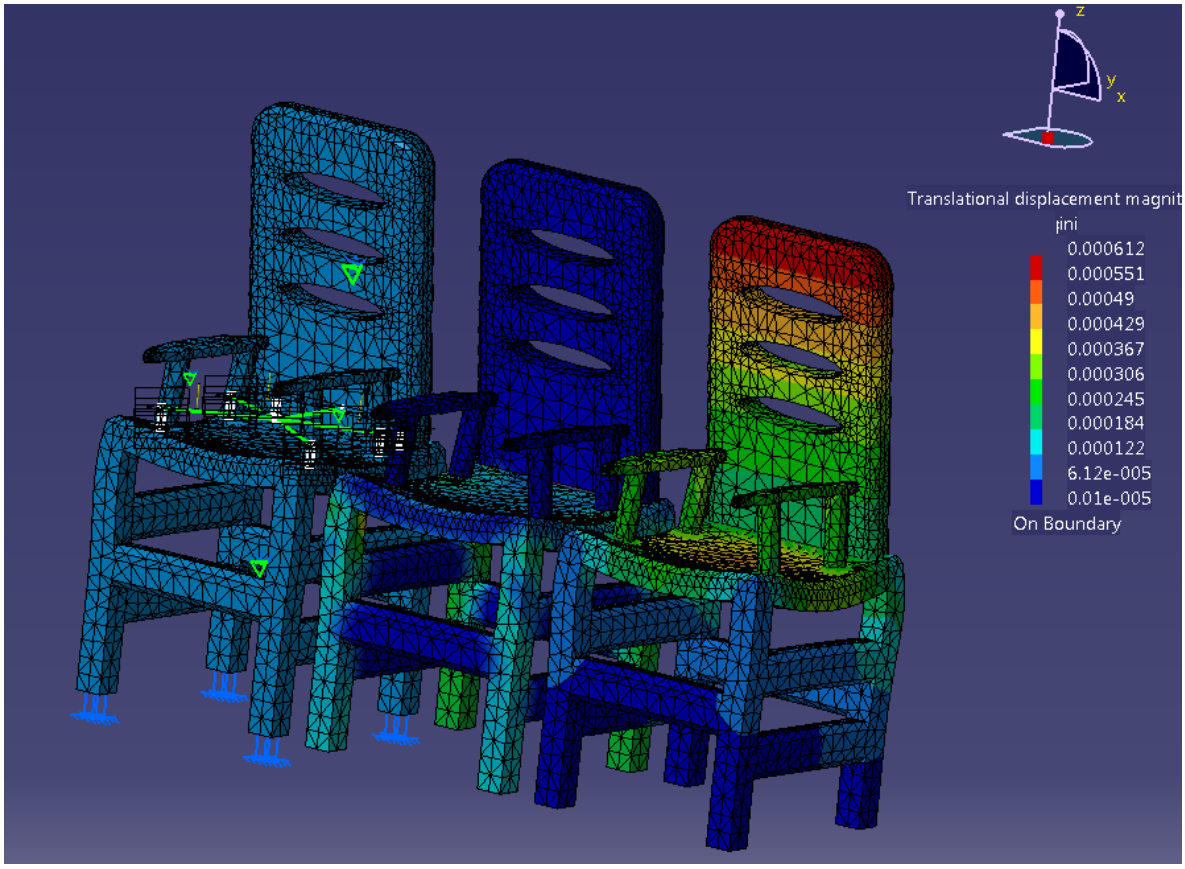
z
y
x
Translational displacement magnit
ini
0.000612
0.000551
0.00049
0.000429
0.000367
0.000306
0.000245
0.000184
0.000122
6.12e-005
0.01e-005
On Boundary

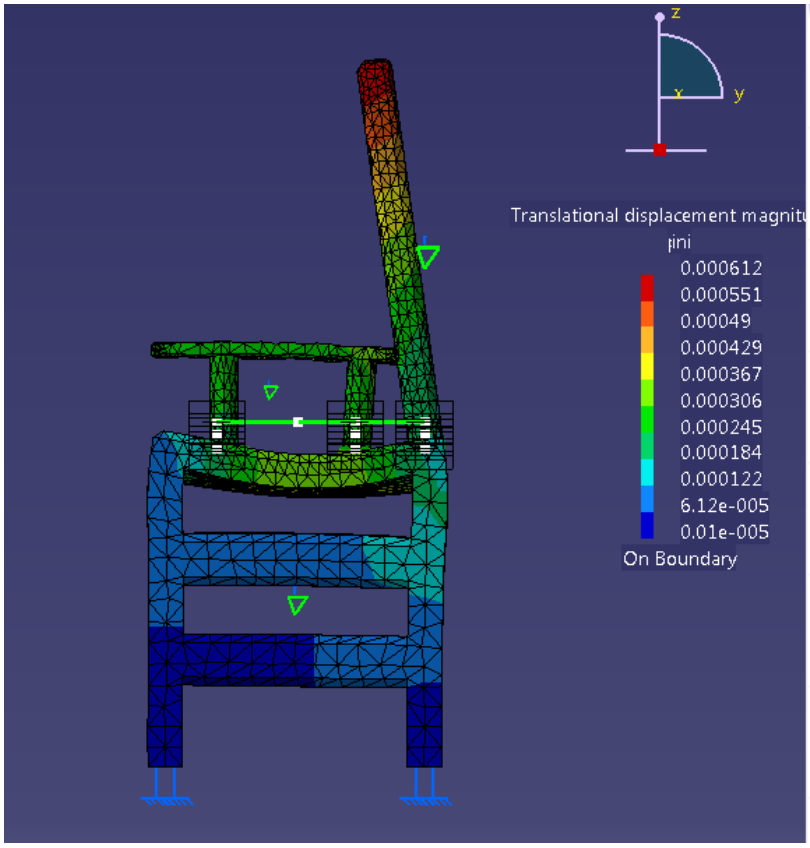
z
x
y
Translational displacement magnitu
ini
0.000612
0.000551
0.00049
0.000429
0.000367
0.000306
0.000245
0.000184
0.000122
6.12e-005
0.01e-005
On Boundary

Chair_Analysis

MESH:

Entity	Size
Nodes	5824
Elements	20067

ELEMENT TYPE:

Connectivity	Statistics
TE4	19764 (98.49%)
SPIDER	303 (1.51%)

ELEMENT QUALITY:

Criterion	Good	Poor	Bad	Worst	Average
Stretch	19762 (99.99%)	2 (0.01%)	0 (0.00%)	0.284	0.611
Aspect Ratio	17323 (87.65%)	2441 (12.35%)	0 (0.00%)	4.454	2.017

Materials.1

Material	Oak
Young's modulus	1.914e+006psi
Poisson's ratio	0
Density	753kg_m3
Coefficient of thermal expansion	0_Kdeg
Yield strength	0psi

Static Case

Boundary Conditions

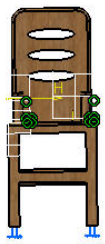

Figure 1

STRUCTURE Computation

Number of nodes	:	5824
Number of elements	:	20067
Number of D.O.F.	:	17472
Number of Contact relations	:	303
Number of coefficients	:	1390
Number of Kinematic relations	:	0

Linear tetrahedron	:	19764
Contact join	:	303

RESTRAINT Computation

Name: Restraints.1

Number of S.P.C : 108

LOAD Computation

Name: Loads.1

Applied load resultant :

Fx	=	-7	.	480e-014	lbf
Fy	=	8	.	327e-014	lbf
Fz	=	-3	.	000e+002	lbf
Mx	=	-3	.	453e+002	Nxm
My	=	2	.	881e+002	Nxm
Mz	=	1	.	514e-013	Nxm

STIFFNESS Computation

Number of lines	:	17472			
Number of coefficients	:	311847			
Number of blocks	:	1			
Maximum number of coefficients per bloc	:	311847			
Total matrix size	:	3	.	64	Mb

SINGULARITY Computation

Restraint: Restraints.1

Number of local singularities	:	0
Number of singularities in translation	:	0
Number of singularities in rotation	:	0
Generated constraint type	:	MPC

CONSTRAINT Computation

Restraint: Restraints.1

Number of constraints	:	108
Number of coefficients	:	0
Number of factorized constraints	:	108
Number of coefficients	:	0
Number of deferred constraints	:	0

FACTORIZED Computation

Method	:		SPARSE	
Number of factorized degrees	:	17364		
Number of supernodes	:	3330		
Number of overhead indices	:	148883		
Number of coefficients	:	2304175		
Maximum front width	:	1019		
Maximum front size	:	519690		
Size of the factorized matrix (Mb)	:	17	.	5795
Number of blocks	:	2		
Number of Mflops for factorization	:	8	.	471e+002
Number of Mflops for solve	:	9	.	304e+000
Minimum relative pivot	:	5	.	847e-010

Minimum and maximum pivot

Value	Dof	Node	x (in)	y (in)	z (in)
1.4674e-001	Tz	5823	1.4585e+001	4.6839e+000	4.9818e+000
1.8634e+009	Tz	4043	1.9777e+000	1.2209e+001	-5.4991e+000

Minimum pivot

Value	Dof	Node	x (in)	y (in)	z (in)
1.4938e-001	Tx	5784	1.4877e+001	-1.4514e-001	7.4125e+000
2.2299e-001	Tx	5785	1.5026e+001	3.8904e+000	2.2698e+000
2.3101e-001	Tz	5824	1.4627e+001	4.7075e+000	3.4011e+000
2.5861e-001	Tx	5628	1.4471e+001	3.7500e+000	2.0000e+000
2.9739e-001	Ty	5824	1.4627e+001	4.7075e+000	3.4011e+000
3.1413e-001	Tz	5784	1.4877e+001	-1.4514e-001	7.4125e+000
3.5787e-001	Ty	5784	1.4877e+001	-1.4514e-001	7.4125e+000
3.8314e-001	Tx	5824	1.4627e+001	4.7075e+000	3.4011e+000
5.1753e-001	Tz	5627	1.5498e+001	3.7689e+000	2.0000e+000

Translational pivot distribution

Value	Percentage
10.E-1 --> 10.E0	5.7590e-002
10.E0 --> 10.E1	5.7590e-003
10.E1 --> 10.E2	2.8795e-002
10.E2 --> 10.E3	0.0000e+000
10.E3 --> 10.E4	5.7590e-003
10.E4 --> 10.E5	2.8795e-002
10.E5 --> 10.E6	2.8795e-002
10.E6 --> 10.E7	3.4554e-002
10.E7 --> 10.E8	3.0926e+000
10.E8 --> 10.E9	9.2692e+001
10.E9 --> 10.E10	4.0256e+000

DIRECT METHOD Computation

Name: Static Case Solution.1

Restraint: Restraints.1

Load: Loads.1

Strain Energy : 5.420e-003 J

Contact analysis

(

Contact join

)

Equilibrium

Components	Applied Forces	Reactions	Residual	Relative Magnitude Error
Fx (lbf)	-7.4799e-014	-6.2295e-012	-6.3043e-012	4.6362e-014
Fy (lbf)	8.3266e-014	1.9267e-011	1.9350e-011	1.4230e-013
Fz (lbf)	-3.0000e+002	3.0000e+002	-8.7539e-012	6.4377e-014
Mx (Nxm)	-3.4531e+002	3.4531e+002	-5.4627e-011	6.5900e-013
My (Nxm)	2.8811e+002	-2.8811e+002	1.0743e-011	1.2961e-013
Mz (Nxm)	1.5135e-013	3.2772e-011	3.2923e-011	3.9718e-013

Static Case Solution.1 - Deformed mesh.2

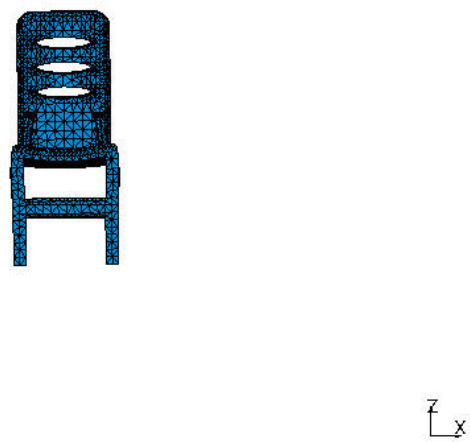

Figure 2

On deformed mesh ---- On boundary ---- Over all the model

Static Case Solution.1 - Von Mises stress (nodal values).2

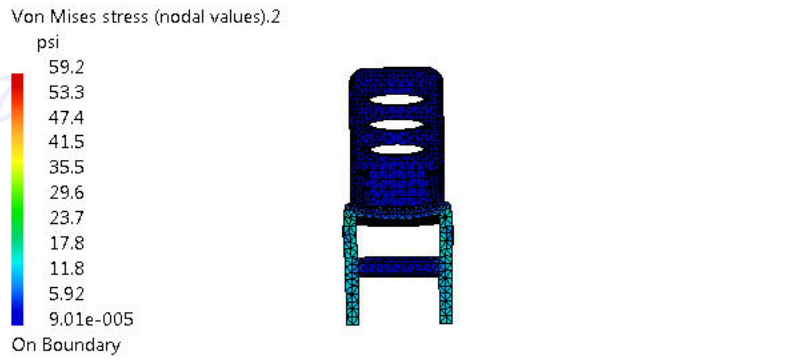

Figure 3

1D elements: : Components: : All

3D elements: : Components: : All

On deformed mesh ---- On boundary ---- Over all the model

Global Sensors

Sensor Name	Sensor Value
Energy	0.005J
Global Error Rate (%)	40.388019562