EDSGN 100

Section 15, Team #4

Collapsible Shopping Cart

Submitted by: Waleed Alhayaza, Quinn Opalka, Joseph Farabaugh, Daniel McConnell

Submitted to: Xinli Wu

Fall, 2013

Quinn Opalka

https://sites.google.com/site/bestshoppingcarted100/

Table of contents

Topic ***Page***

Introduction 2

Executive Summary 2

Problem statement.....3

Mission Statement 3

Design Specifications 3

Project Management (Gantt chart) 4

Customer Needs Assessment 5

Concept Generation 6

Design Selection matrices.....7

Design 8-13

Shopping cart features 14

Working Mechanism.....14

Cost Analysis 14

Conclusion 15

Acknowledgements..... 16

References 16

Introduction

In an Engineering Design class, students were arranged in groups of four. Each group was asked to determine the best way to build a shopping cart that is flexible, can hold 100 pounds, and costs 50.00$ as max. Research was conducted to find information about the weakness and the problems on the classical shopping cart as well as the the available technologies on the market today that can be use to make a better shopping cart. Different concepts for the shopping cart were created and sketched with the best being determined by overall score in a concept scoring matrix. This concept then was developed and a SolidWorks model was constructed. Finally, a sample of the shopping cart was constructed in a ½ scale.

Executive Summary

This design project focused on constructing a cheap, collapsible shopping cart. Some key features in our design are a folding plastic cage, an insulated carrier, oversized rubber wheels, pull designed handles, and brakes. This cart is ideal for apartments, storage, and carrying large loads with multiple kinds of groceries.

Problem Statement

The problem is that we need to design a cost efficient and portable shopping cart that can hold over one hundred pounds. The cart should be easy to use and it should cost less than fifty dollars to make.

Mission Statement

In order to begin solving our problem, the group will discuss and test various shopping cart designs. We will research dimensions and materials in order to construct a strong, cost efficient design that meets our budget and guidelines.

Design Specifications:

1. The design must cost under $50 to construct.
2. The design must be able to hold 100 pounds.
3. The design must be foldable/collapsible for easy storage and transportation.

4

Project Management (Gantt chart)

	Gantt Chart	Assigned To	Start	End	Dur	%
	Main Topic		9/16/13	10/28/13	30	
1	Gather Info	Everyone	9/16/13	9/19/13	4	
2	Brainstorm	Everyone	9/16/13	9/19/13	4	
3	Design Concept Selection	Everyone	9/19/13	9/23/13	3	
4	Working Drawings	Everyone	9/22/13	9/30/13	6	
5	Prototype	Everyone	9/30/13	10/7/13	6	
6	Design Evaluation Test	Everyone	10/7/13	10/14/13	5	
7	Design Documentation Presentation	Everyone	10/14/13	10/21/13	5	
8	Website Publishing	Everyone	10/21/13	10/28/13	6	

Daniel McConnell

Customer Needs Assessment

Our team made survey and shot a video, in which we asked students on campus, workers, and we even went to College Av. to people other than college students. In our perspective, we believed that since we want everyone to have our shopping cart we need to inreach our data by collecting it from variety of people with different ages and different style of life.

In the schedule we translate customer statements to needs statements as shown below:

#	Customer statement	Needs statement
1	" I don't want it to be annoying "	The wheels should be large (5 inches) and made of rubber.
2	" I want it to keep my groceries cold"	The shopping cart will be covered by cooler lining.
3	"I want to be able to carry the shopping cart "	The shopping cart has is designed to be easy to carry like backpack.
4	" I want to have a nice shopping cart"	The cover of the shopping cart is will have different fashion colors.
5	" I don't want my groceries to be mixed together"	The cage of the shopping cart will be separated to compartments.

Concept Generation

After considering the problem definition, the customer needs, and taking a short survey from customers, we came up with a variety of ideas and solutions to make our shopping cart.

Ideas	Votes
Shopping cart attached to bicycle	4
Isolated shopping cart	4
Larger wheels for the shopping cart	2
Maximize the size of the shopping cart	3
Shopping cart with reflectors	2
Shopping cart with different compartments	4
flexible shopping cart	4
carryable shopping cart	3
shopping cart with automatic brakes	3

7

Design Selection matrices

We chose the best ideas that meets our customer needs and rank them again to narrow the number of concepts that we want in the shopping cart, so we prepared a selection matrix and we used the scale of "better than" (+), "same as" (0) and "worse than" (-) and we chose the classical shopping cart as our reference concept to rank the other designs.

Waleed Alhayaza

Shopping Cart Matrix	Control (The Cart)	Design 1 (Hamper)	Design 2 (Detachable)	Design 3 (Bike)	Design 4 (Colorful Square)	Design 5 (suitcase/backpack)
Capacity	3	2	3	1	2	2
Ease of Use	1	3	1	2	3	3
Cost	1	3	1	2	3	2
Aesthetics	1	2	3	2	3	2
Durability	3	1	3	2	1	2
Uniquenes s	1	1	2	3	2	3
Safety	2	1	3	1	2	3
Total	12	13	16	16	16	17

Daniel McConnell, Joseph Farabaugh

8
Working Drawings

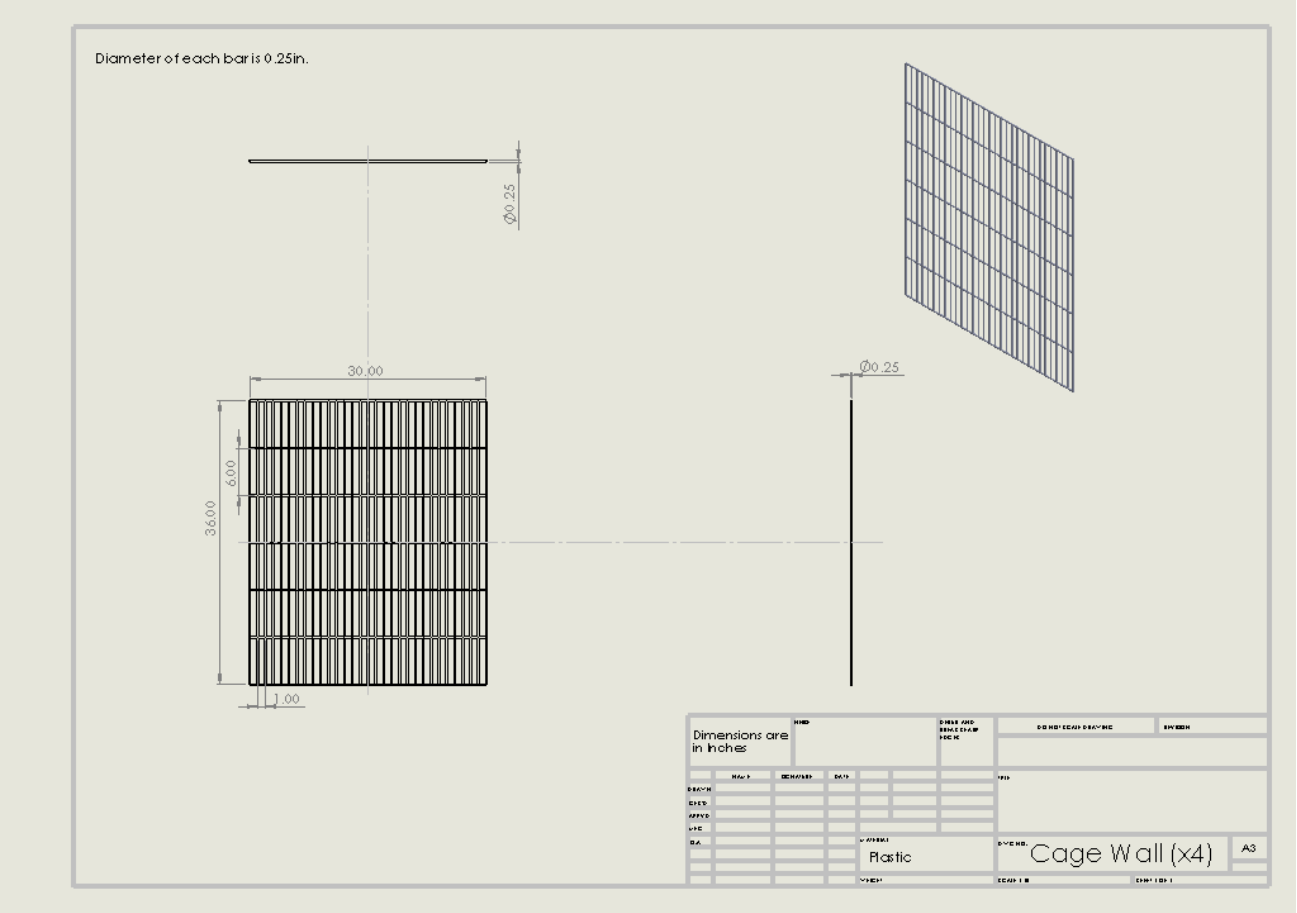

[Joseph Farabaugh](https://sites.google.com/site/bestshoppingcarted100/)

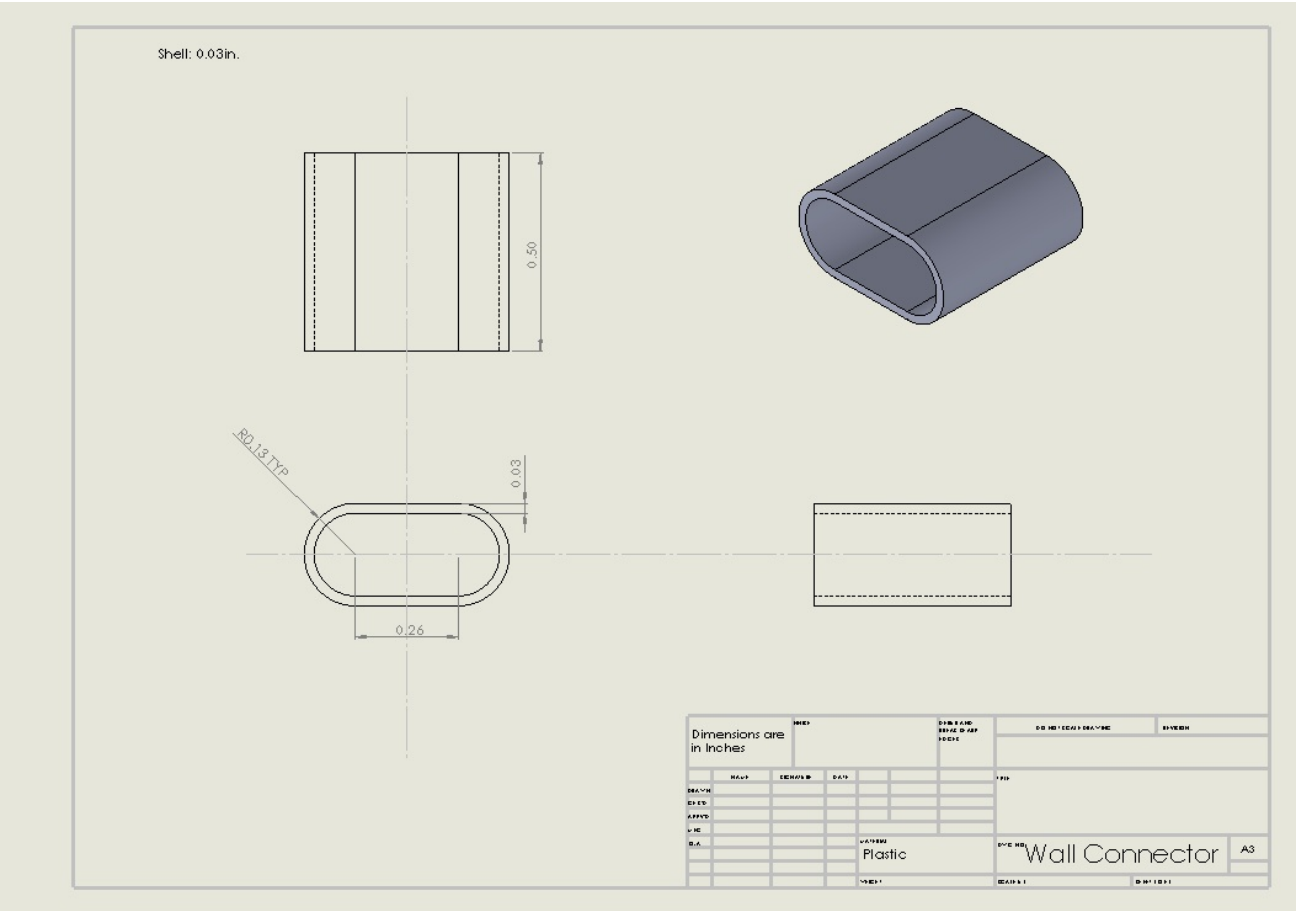

[Joseph Farabaugh](https://sites.google.com/site/bestshoppingcarted100/)

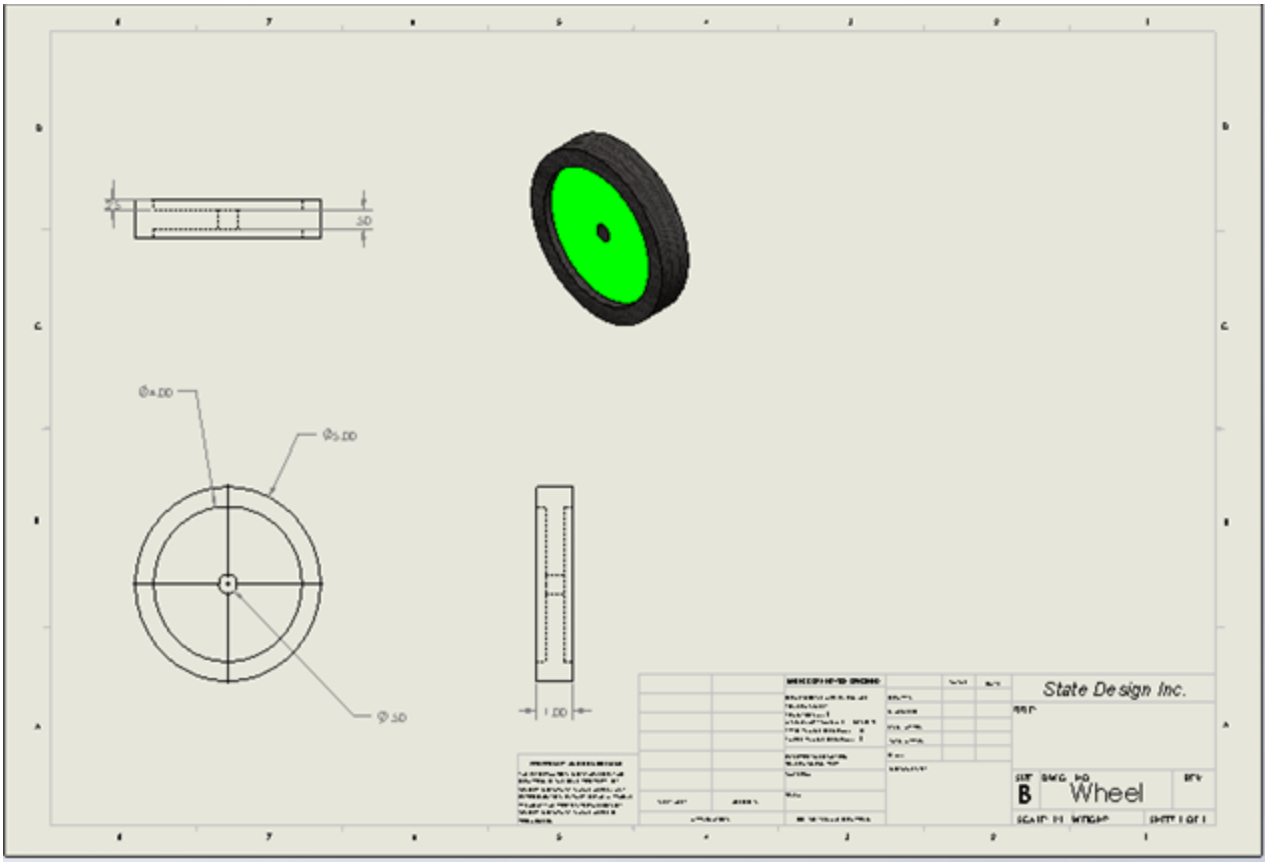

[Quinn Opalka]

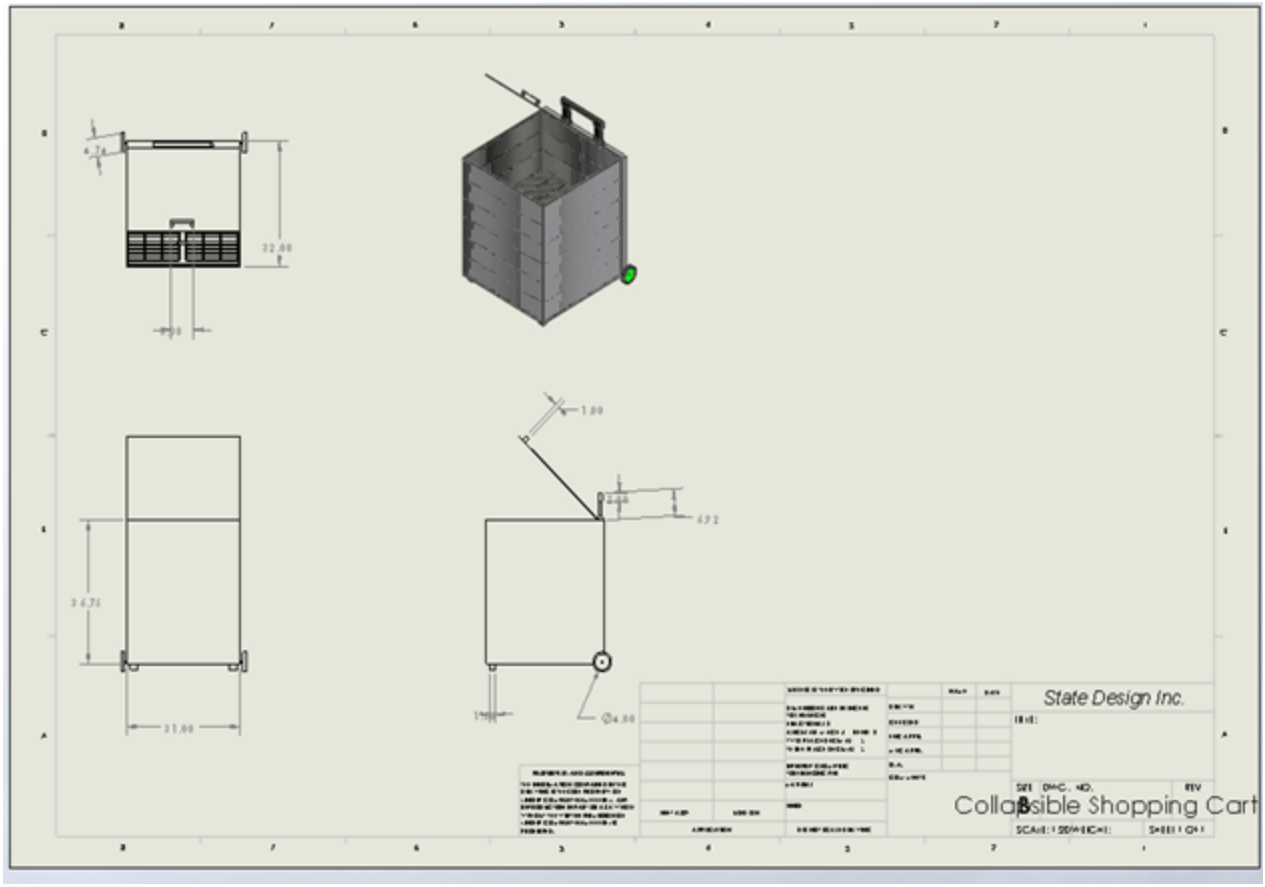

[Quinn Opalka](#)

Exploded View

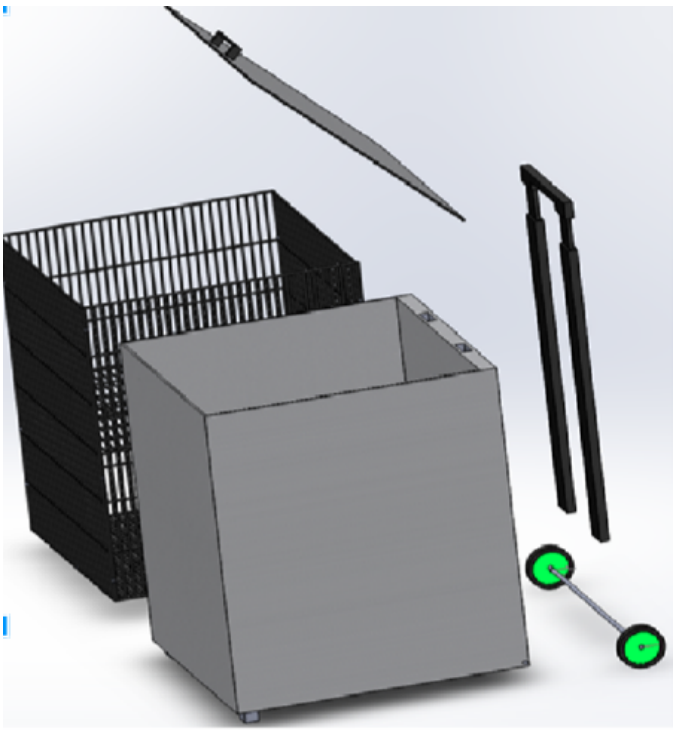

ITEM NO.	PART NUMBER	DESCRIPTION	QTY.
1	real shell outercase		1
2	Cage Wall		4
3	Hinge Wall		19
4	Cage Base		1
5	Inner connection		2
6	Bending floor		2
7	Base Connection		5
8	wheel		2
9	wheel connector		1
10	Wheel Fastenter		2
11	Handle		1
12	Handle Part 2		1
13	shelltop		1

Quinn Opalka

Bill of Materials

Item No.	Part Number	Description	Quantity
1	Real shell outer case		1
2	Cage Wall		4
3	Hinge Wall		19
4	Cage Base		1
5	Inner Connection		2
6	Bending Floor		2
7	Base Connection		5
8	Wheel		2
9	Wheel Connector		1
10	Wheel Fastener		2
11	Handle		1
12	Handle Part 2		1
13	Shelltop		1

https://sites.google.com/site/bestshoppingcarted100/

Key Features

- Collapsible Cage
- Two Section Cage
- Insulated Lining
- Oversized-rubber Wheels
- Retractable Handle

Working Mechanism

This design works by pulling the retractable handle outward and using that to pull along your groceries wherever you go. After you empty your groceries you remove the plastic cage from the inside and push the separated cage up and then compress the cage into one flat piece. The cooler lining bag then simply compresses done and the handle retracts to make it easily storable.

Cost Analysis

	Materials	# of units	price per unit	Total Cost
1	Plastic Cage(36in rods)	36	$0.18	$19.44
2	Wheel	2	$2.77	$5.54
3	Handles(plastic bars 3"x4')	2	$1.03	$2.06
4	Insulated Lining(19"x12"x11")	2.5	$8.75	$21.88
5	Shopping cart			$48.92

Conclusion

In conclusion, our team which consisted of Dan, Joey, Waleed, and Quinn was successful at creating the Collapsible Shopping Cart. This project was completed by finding evidence from the outside world and through research to make it the ideal shopping cart. Some constraints in this project were a 100 lb load capacity, $50 budget, and foldable design. In our project we aimed to make our shopping cart for the everyday user. This would be someone who has to walk to the store and carry heavy loads back and forth whenever they please. This cart has a variety of main features that make it quintessential, such as, its oversized rubber wheels that create better stability and less pressure on the user. Also the collapsible, plastic inner cage, which has two tiers, is made of a strongly supported plastic frame that is lightweight and durable.*(Note: In our assembly and working drawings due to time constraints and cost issues the actual design would have four times less the amount of plastic rods on each wall of the cage). The cage is surrounded by a high efficiency cooler lining that keeps your groceries cool and also shields them from unwanted extremities such as rain or snow. Lastly our design has a simple brake system that can save you from holding heavier loads on hills or slick conditions. Overall, our Collapsible Shopping Cart design is a lightly weighted, easily storable, and durable product all for around $49.

Acknowledgements

We would like to thank Penn State University for the lab space and use of computers. We would also like to thank Xinli Wu for teaching us the technical uses and programs when it came to finalizing the project.

Joseph Farabaugh

References

http://www.mcmaster.com

http://www.academy.com/shop/browse/camping-outdoors-coolers-soft-side-coolers/_/N-363067185

*Prototype completed by :

Joseph Farabaugh

Website completed by:

Waleed Alhayaza