DESIGN PROJECT 1

Team 007
James Armour
Julian Catrambone
Justin McCarthy
Omar Alhussaini

Sequence of design activities completed

- Define the problem : The problem is to design an toothbrush that is environmentally friendly
- Gathered data for customer needs
- Conceptualization:
  - Internal search – Brainstormed as a team for energy mechanisms, power generation, and aesthetics
  - External search - patent search, literature searches, product dissection, benchmarking
- Preliminary Design – Drew several sketch's of different concepts, and considered each one
- Detailed Design – Selected final design, created a solid model on Solidworks

Project Management

- We were able to work effectively as a team by establishing a chain of command, and division of labor for every assignment. Having a definitive leader helped define roles in the group and maintain quality of work demanded in the time frame requested. We also worked very effectively in class time to minimize the time spent outside of class on the design project.

Final Hierarchal customer needs chart and problem statement

- Based on the surveys, the most important thing for consumers is the quality of clean of the toothbrush. The appearance of the toothbrush doesn't matter that much and our aim is to have an environmentally friendly toothbrush. And we plan to make the toothbrush between the prices of $6 and $10. Most of the consumers prefer using a lighter toothbrush than a heavy one. We should also let the consumers have the opportunity to choose between hard bristles and soft, and these bristles should be replaceable so they won't have to buy a new toothbrush.

1) Cost
1) Retail Cost (0.0692)
1.2) Accessories included with package (0.0549)
2) Design features
2.1) Environmental Stability, safer for the environment (0.217)
2.2) Durability, lasts longer then average toothbrush (0.083)
2.3) Appearance, personalized (0.043)
2.4) Toothbrush head design (0.119)
2.5) Size of the toothbrush (0.049)
3) Use
3.1) Quality of the clean provided (0.329)
3.2) Easy to use effectively (0.048)

External search activities

- Our external search activities were literature review, patent search, benchmarking and product dissection. These helped us determine what was on the market and how we cam improve the current models out today.

	Oral-B AdvancePower 400	Oral-B Vitality Dual Power	Oral-B Professional Care SmartSeries 4000	Oral-B Complete Scope Scented Toothbrush
Grip	Full wrap (4)	Full wrap (4)	No (1)	No (1)
Battery	2 AA (2)	2 AA (2)	Corded (3)	Manual (1)
Bristles	Oscillating, 1 head (4)	Oscillating, 2 Heads (5)	Oscillating, 1 head (3)	1 Head (1)
Cleaning Power	Average (3)	Good (4)	Average (3)	Poor (1)
Total Rating	13	15	10	4

- This shows 4 different toothbrushes on the market today. This was the most effective of our external search activities, because it showed us exactly what was on the market and how it can be improved to better fit the consumers needs

Generated Concepts

- The concepts on the next slide show the process of how we got to our final design and some of the intermediate steps involved.
- These concepts where a vital part of the design process and show the designs we went through to get to our final design and model.

Generated Concepts

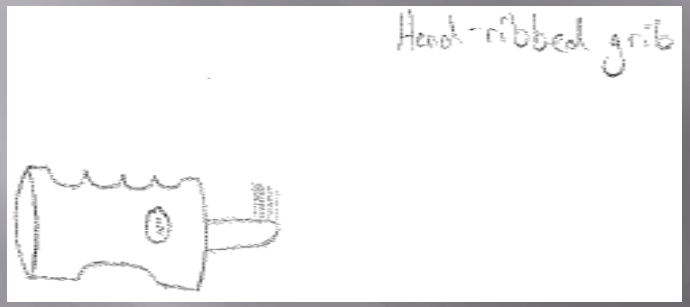

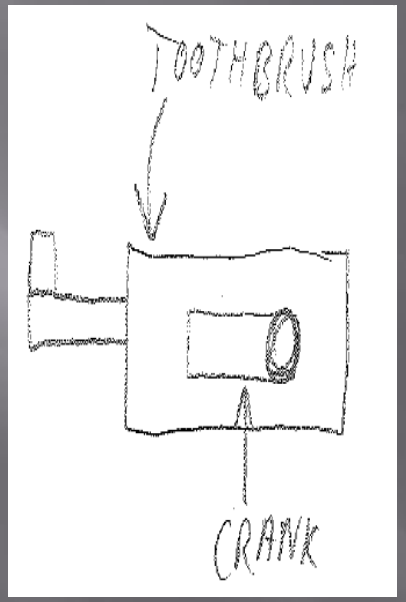

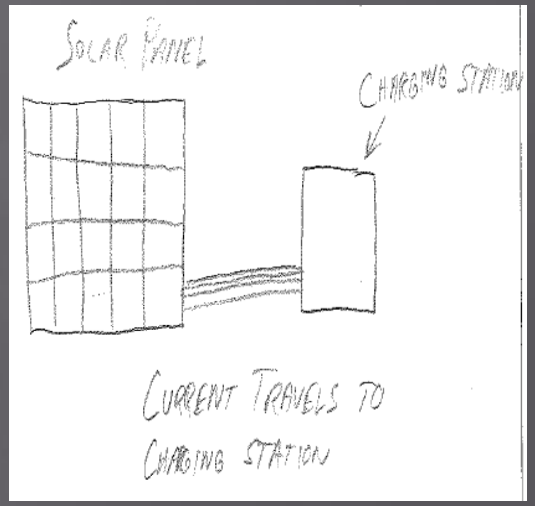

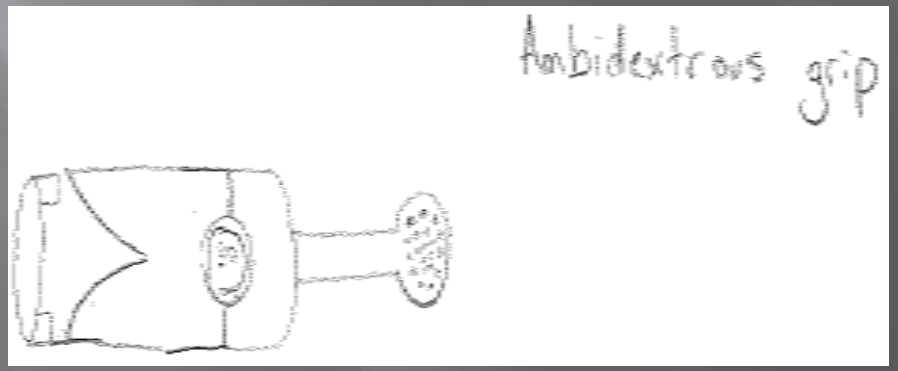

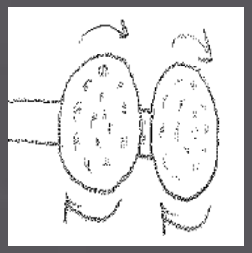

Team Pugh Chart Toothbrush Head

Toothbrush Head	Size	Cost	Weight	Power	Total	Rank
Weighting	0.2	0.2	0.3	0.3	1	
Concepts						
Dual-Oscillation	1	1	1	1	1	1
Oscillating head between two stationary sets	1	1	1	1	1	1
Tongue Cleaner	0	0	0	0	0	3
Dual-Oscillation	0	0	0	0	0	1
Oscillating head between two stationary sets	0	0	0	0	0	1
Tongue Cleaner	-1	-1	-1	-1	-1	3
Dual-Oscillation	0	0	0	0	0	1
Oscillating head between two stationary sets	0	0	0	0	0	1
Tongue Cleaner	-1	-1	-1	-1	-1	3

Team Pugh Chart Energy Mechanism for brush head

Energy Mechanism for brush head	size	cost	weight	power	total	rank
Weight	0.2	0.2	0.3	0.3	1	
Concepts						
Spinning Toothbrush head	0	0	0	0	0	1
Moving Toothbrush head	-1	-1	-1	-1	-1	3
Vibration Toothbrush head	-1	-1	0	0	-0.4	2
Spinning Toothbrush head	1	1	1	1	1	1
Moving Toothbrush head	0	0	0	0	0	3
Vibration Toothbrush head	0	0	1	1	0.6	2
Spinning Toothbrush head	1	1	0	0	0.4	1
Moving Toothbrush head	0	0	-1	-1	-0.6	3
Vibration Toothbrush head	0	0	0	0	0	2

Team Pugh Chart Human Factors

Human Factors	size	cost	weight	power	total	rank
weight	0.2	0.2	0.3	0.3	1	
concept						
Hand Grip	0	0	0	0	0	1
Adjustable Body	0	0	0	0	0	1
Collapsable Body	-1	-1	-1	-1	-1	3
Hand Grip	0	0	0	0	0	1
Adjustable Body	0	0	0	0	0	1
Collapsable Body	-1	-1	-1	-1	-1	3
Hand Grip	1	1	1	1	1	1
Adjustable Body	1	1	1	1	1	1
Collapsable Body	0	0	0	0	0	3

Team Pugh Chart Power Generation

power generation	size	cost	weight	power	total	rank
weight	0.2	0.2	0.3	0.3	1	
concept						
Solar Panel power generation	0	0	0	0	0	1
Wind up power generation	0	0	0	-1	-0.3	2
magnetic power generation	-1	-1	-1	0	-0.7	4
Water power generation	-1	-1	0	0	-0.4	3
Solar Panel power generation	0	0	0	1	0.3	1
Wind up power generation	0	0	0	0	0	2
magnetic power generation	-1	-1	-1	1	-0.4	4
Water power generation	-1	-1	0	1	-0.1	3
Solar Panel power generation	1	1	1	0	0.7	1
Wind up power generation	1	1	1	-1	0.4	2
magnetic power generation	0	0	0	0	0	4
Water power generation	0	0	1	0	0.3	3
Solar Panel power generation	1	1	0	0	0.4	1
Wind up power generation	1	1	0	-1	0.1	2
magnetic power generation	0	0	-1	0	-0.3	4
Water power generation	0	0	0	0	0	3

Final Design

How it works

- Our design uses sustainable energy to power the toothbrush making it more environmentally friendly for our customers. It includes the charging station and of course the toothbrush.
- The toothbrush gets all of its energy from the solar panels attached to the base of the charging station. The energy from the charging station transfers into a battery located in the base of the toothbrush where batteries would normally be located.

Conclusion

- In conclusion, we as a team feel our design was a success. We were able to access our customers wants and needs, and put those wants and needs into a environmentally friendly alternative. Run completely on sustainable energy this design can do what every other toothbrush on the market can using completely clean energy. We consider that a success.