Herringbone Heat Exchanger

Abstract

The project was to improve on the heat exchanger's original design from Lockheed Martin. The final design incorporated a slanted air flow path with maximum area inside. The final design did not change much from original design; however, the group decided that the pluses outweighed the minuses. The materials totaled to $23.14, not including labor costs. The group followed the design process.

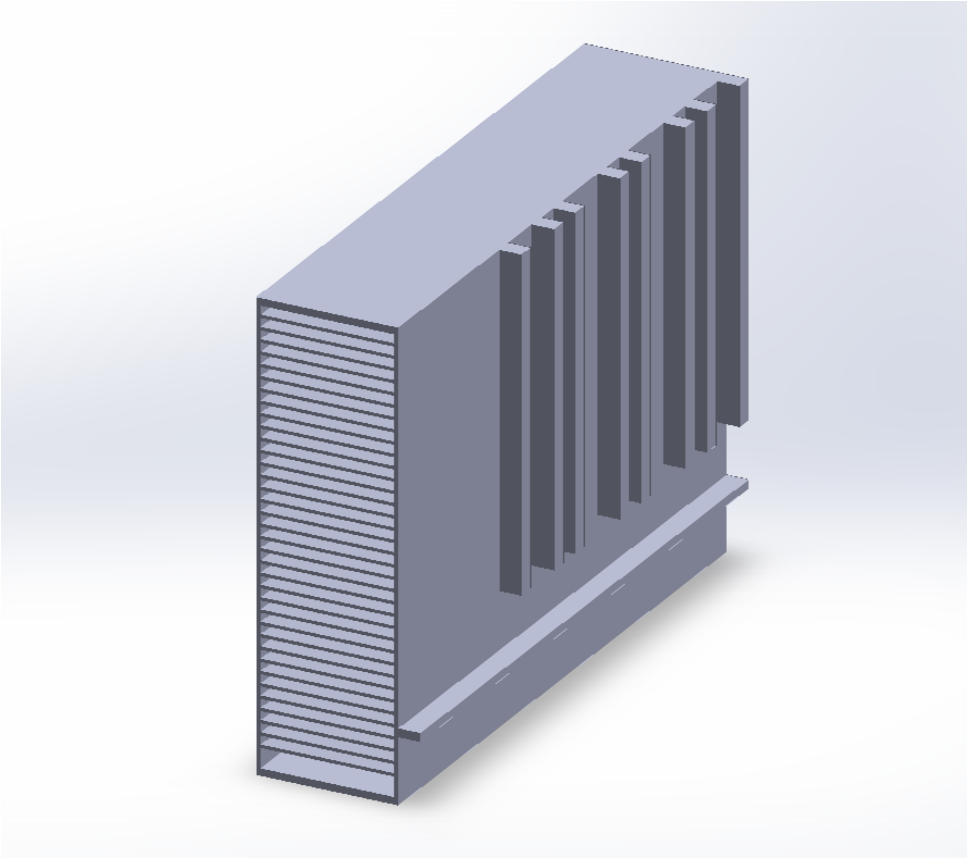

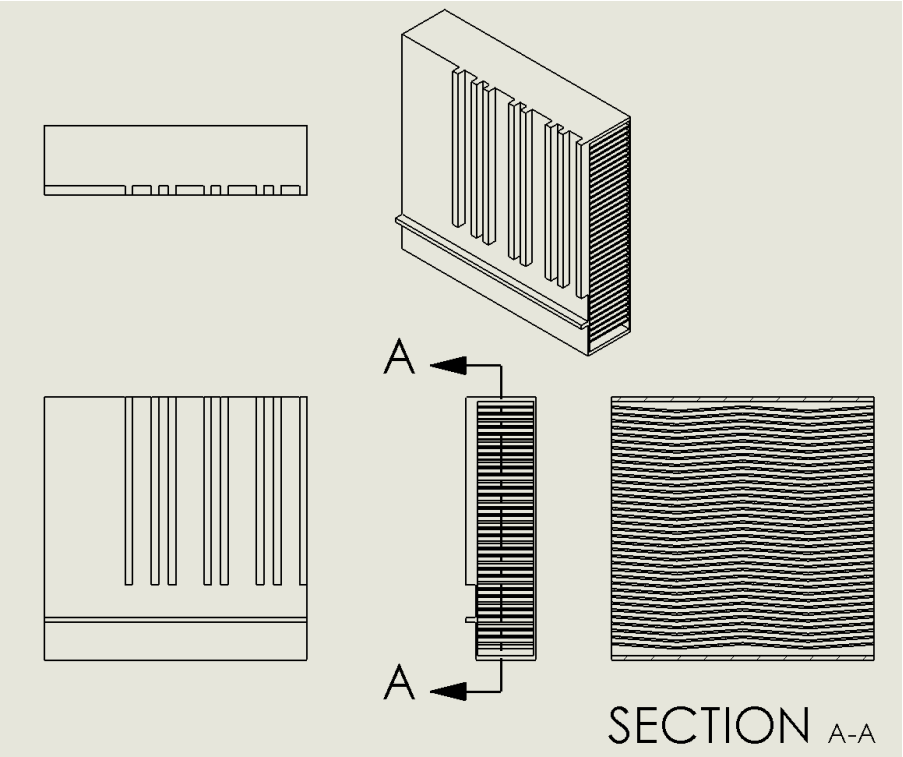
A
A
SECTION A-A

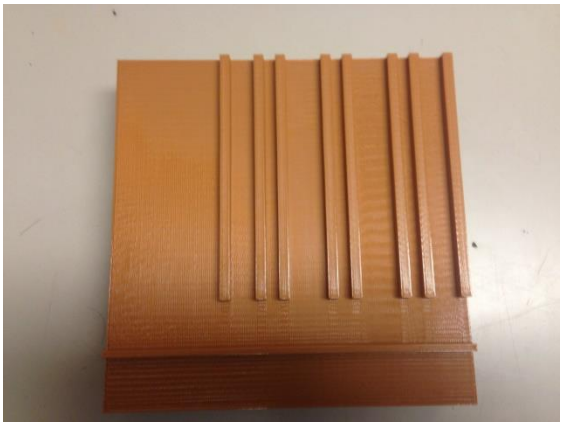

Design Features

The main design feature implemented is the addition of the herringbone pattern and the troughs it creates. As cool air is blown through the exchanger, the current forms a small, circular area which pulls heat off of the fin. The hot air is then blown the rest of the way through the exchanger. While the restrictions of the project did not allow for the optimum number of troughs to be put in place, the prototype still has enough troughs to make it an improvement over the original design