Dumpling Maker

Engineering Design 100, Section 009

Group5

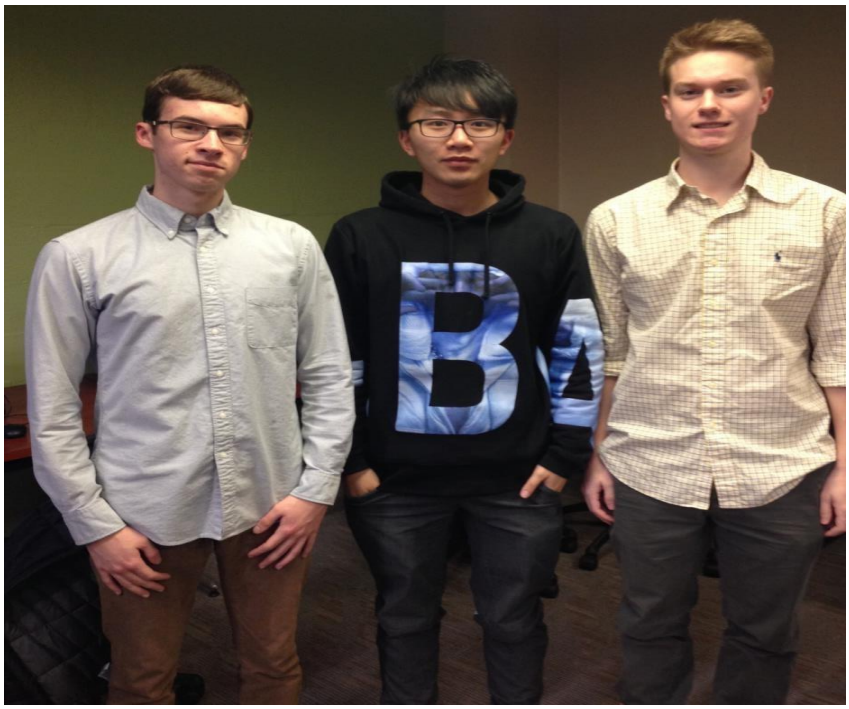

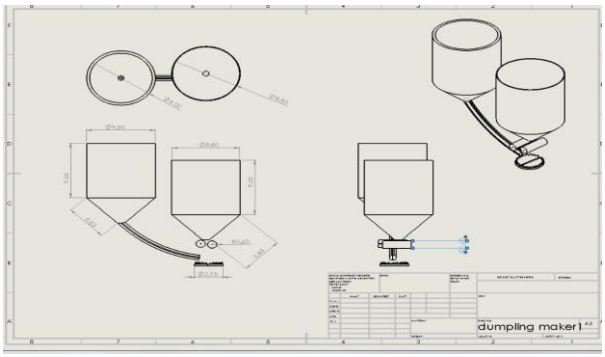

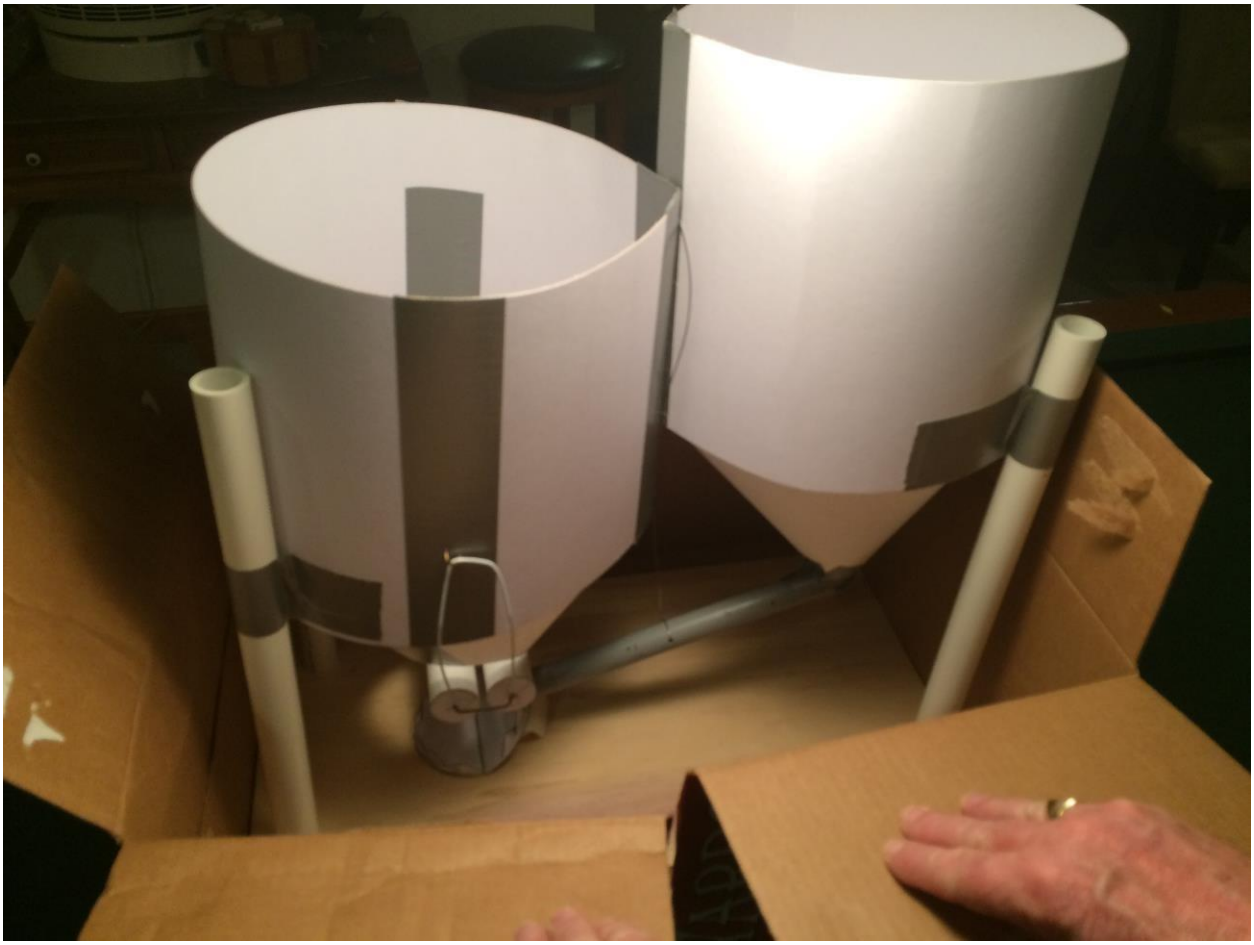

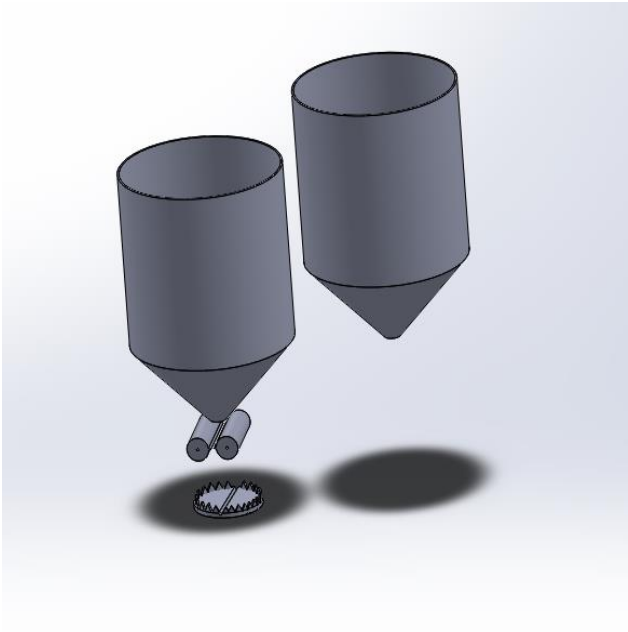

Detail drawing

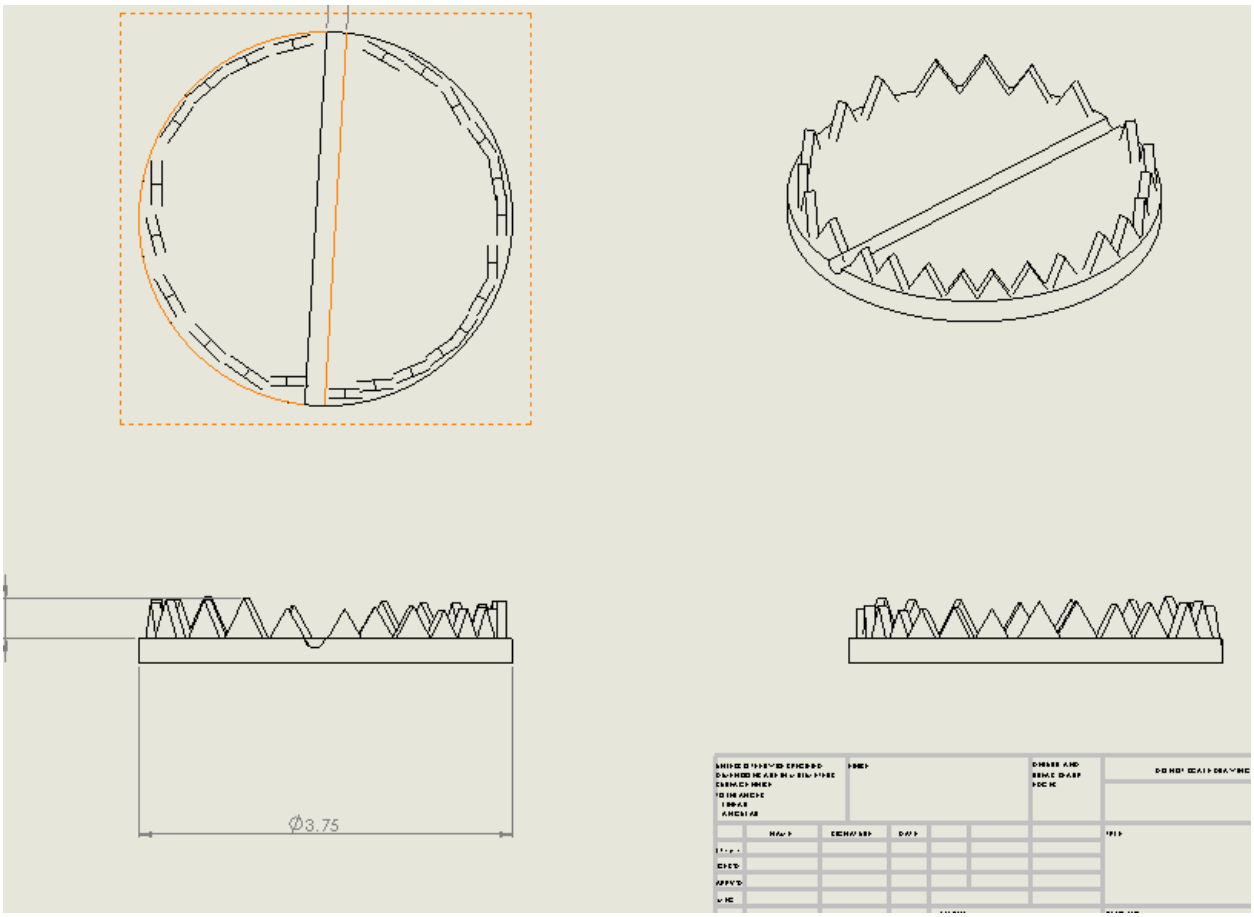

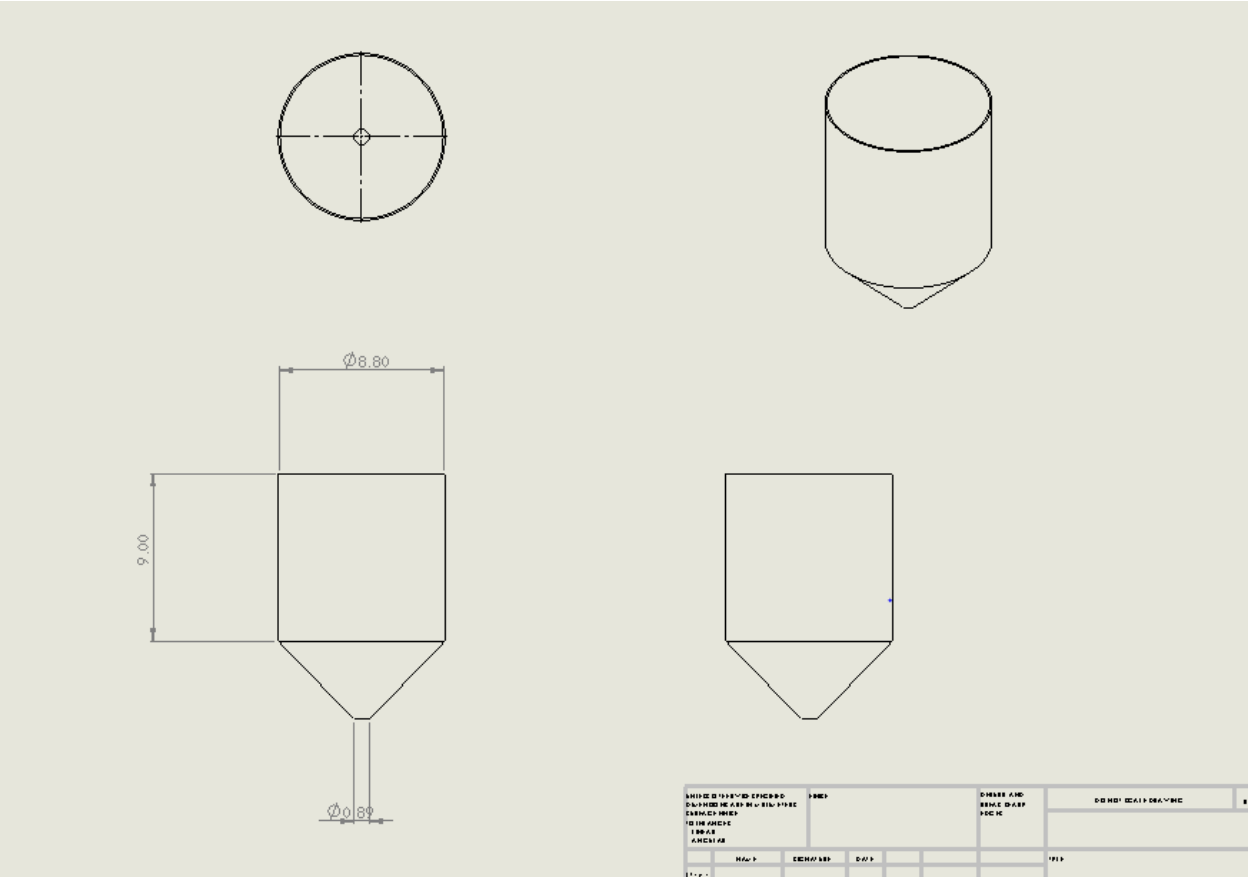
Ø8.80
9.00
Ø0.89

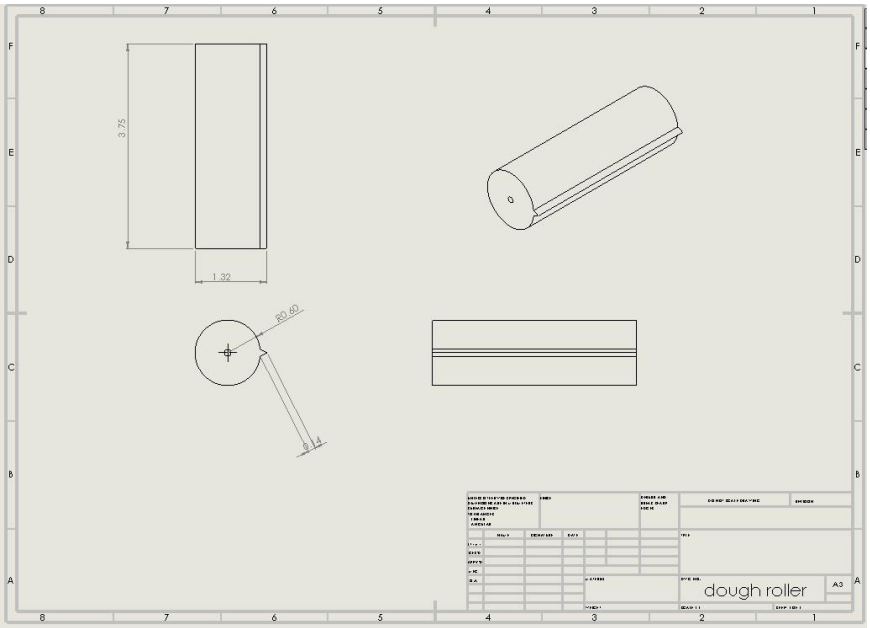
3.75
1.32
R0.60
0.14
dough roller
A3

Abstract

The project was to build a prototype for a portable, cheap dumpling maker. The machine would semi-automatically produce 10 dumplings per minute on average. The team's project incorporated two cylinders, two rollers, a clamp, and a tube. The design the team chose would roll out the dough onto a cutter and then drop filling onto the center of the dough. The materials totaled less than $200. The team followed the design process.

Design Features

The team intended the team's design to be used in a small restaurant or a home. So, the team tried to make it easy to use, dishwasher-safe, durable, compact, and efficient. The size of the team's dumpling make is the appropriate size to be put in a small kitchen. Most parts of the machine, including the dough, filling containers, dough rollers, tube and dumpling clamp, can be taken out and put in the dishwasher. The amount of the filling in each dumpling can be controlled by the person who is using the machine by pushing down the handle on the top of the filling container. The team's design doesn't need any electricity to operate, which makes the team's dumpling maker very cost efficient. The dumpling clamp is on a slope, so the flat dough would be dropped on the right place without folding.