Design Portfolio

Intro to EDesign 100

Jonathan Worden

Submitted By: Jonathan Worden

Submitted To: Xinli Wu. Ph.D., P.E.

Fig 1. Prototype 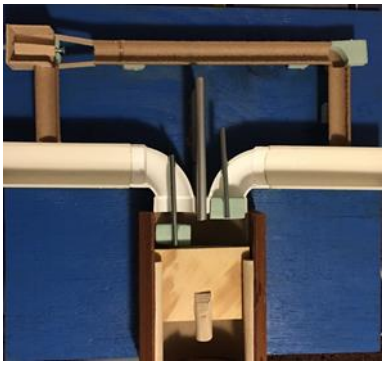

Fig 2. CAD Model 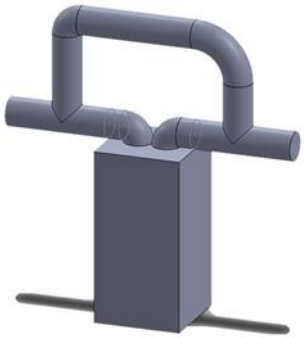

Date Submitted: 12/15/15

Abstract:

The design portfolio consists of two major projects that were completed over the semester. There is also my resume and some example problems of drawing that were completed as well. The first project was about a dumpling maker, the second project was about emission efficient locomotives.

Table of Contents

1. Cover Page……First page

2. Abstract……... Page i

3. Table of Contents…… Page ii

4. Resume……Page 1

5. Course Syllabus……..Page 1

6. Practice Problems……Page 2

7. First Design Project…….Page 5

8. Second Design Project ……Page 11

9. Summary and Conclusions…….Page 13

Resume

Course Syllabus

Course Calendar

Practice Problems and Exercises

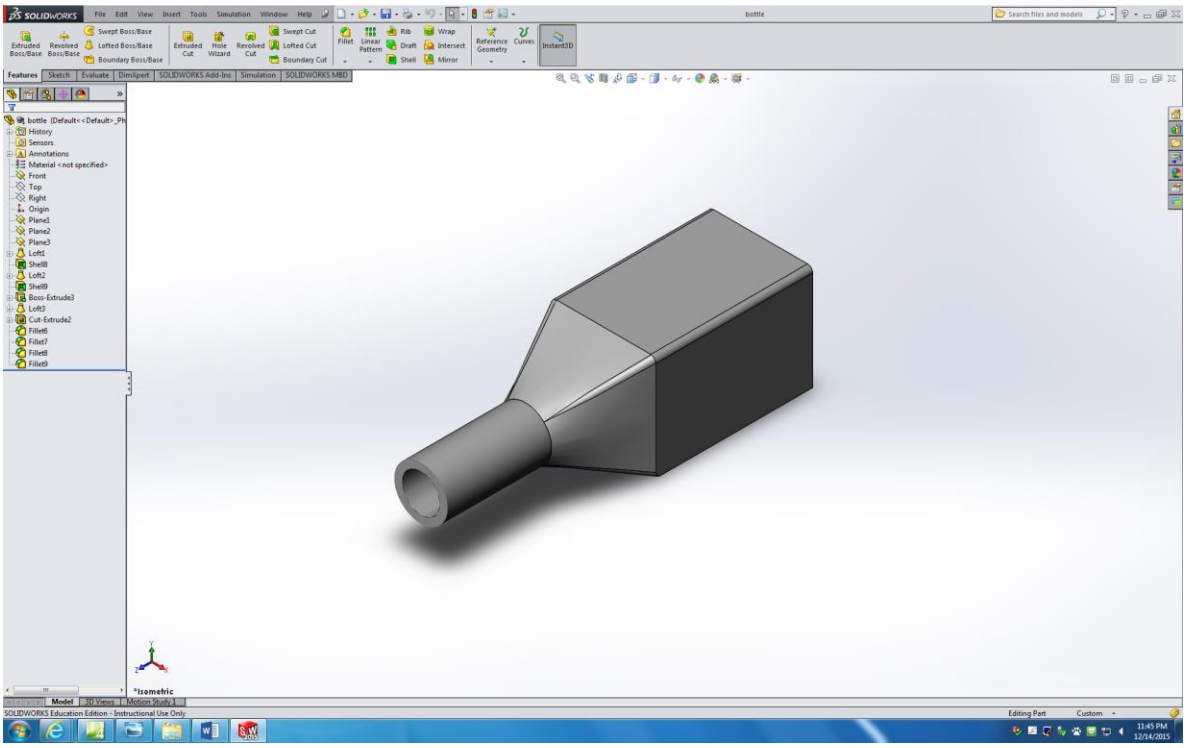

Fig 1. SolidWorks Model of a Bottle.

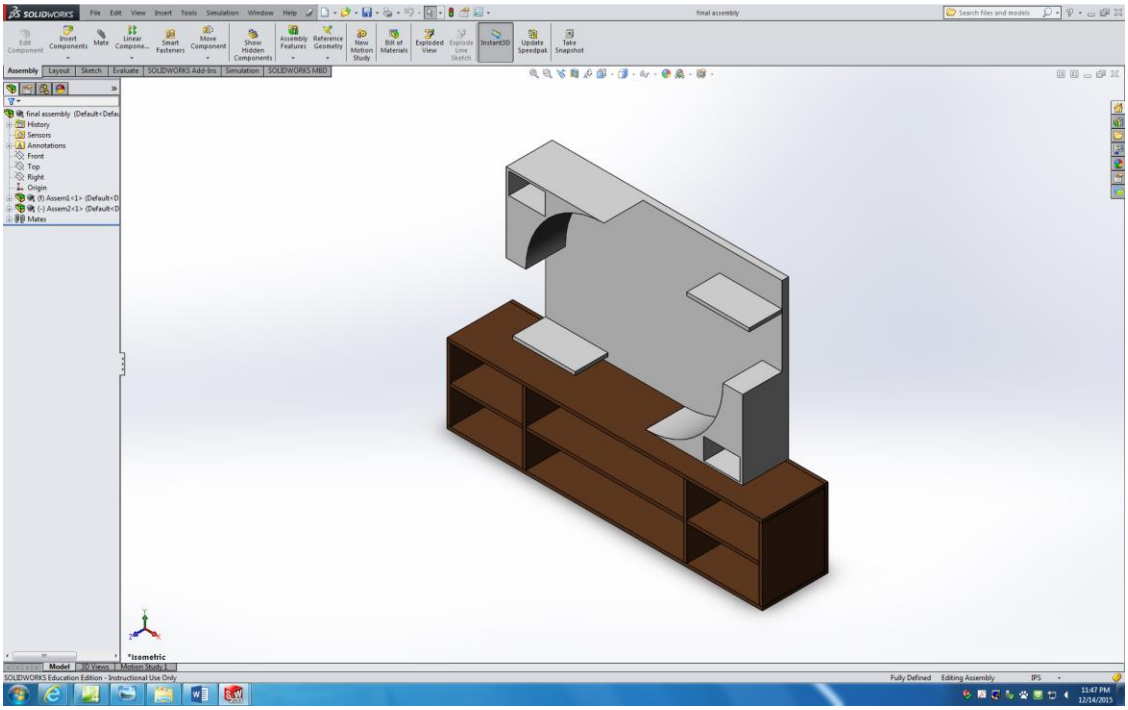

Fig 2. SolidWorks Model of Entertainment System.

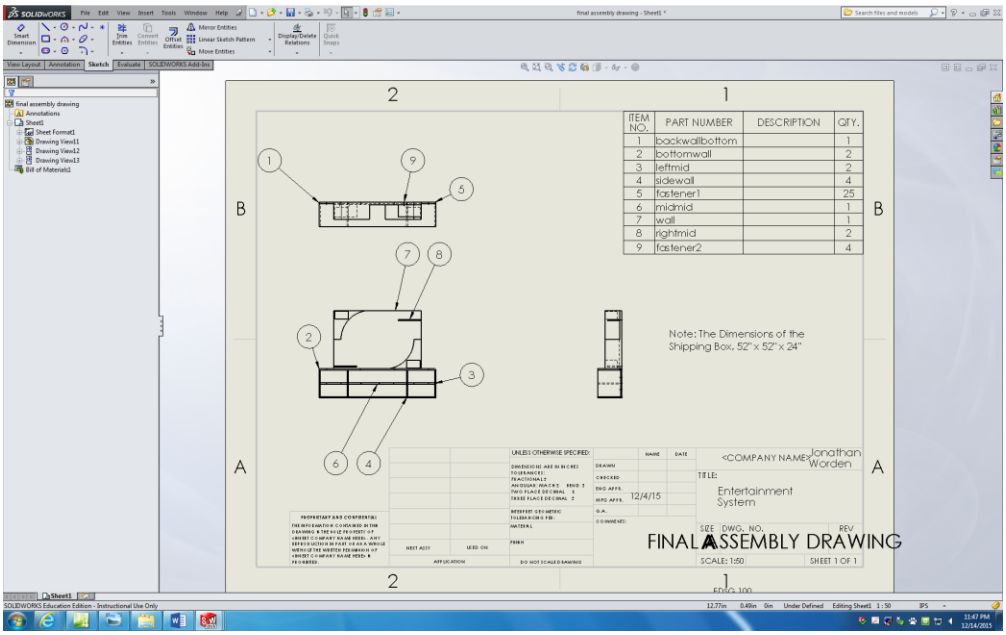

Fig 3. Assembly Drawing of the Entertainment System.

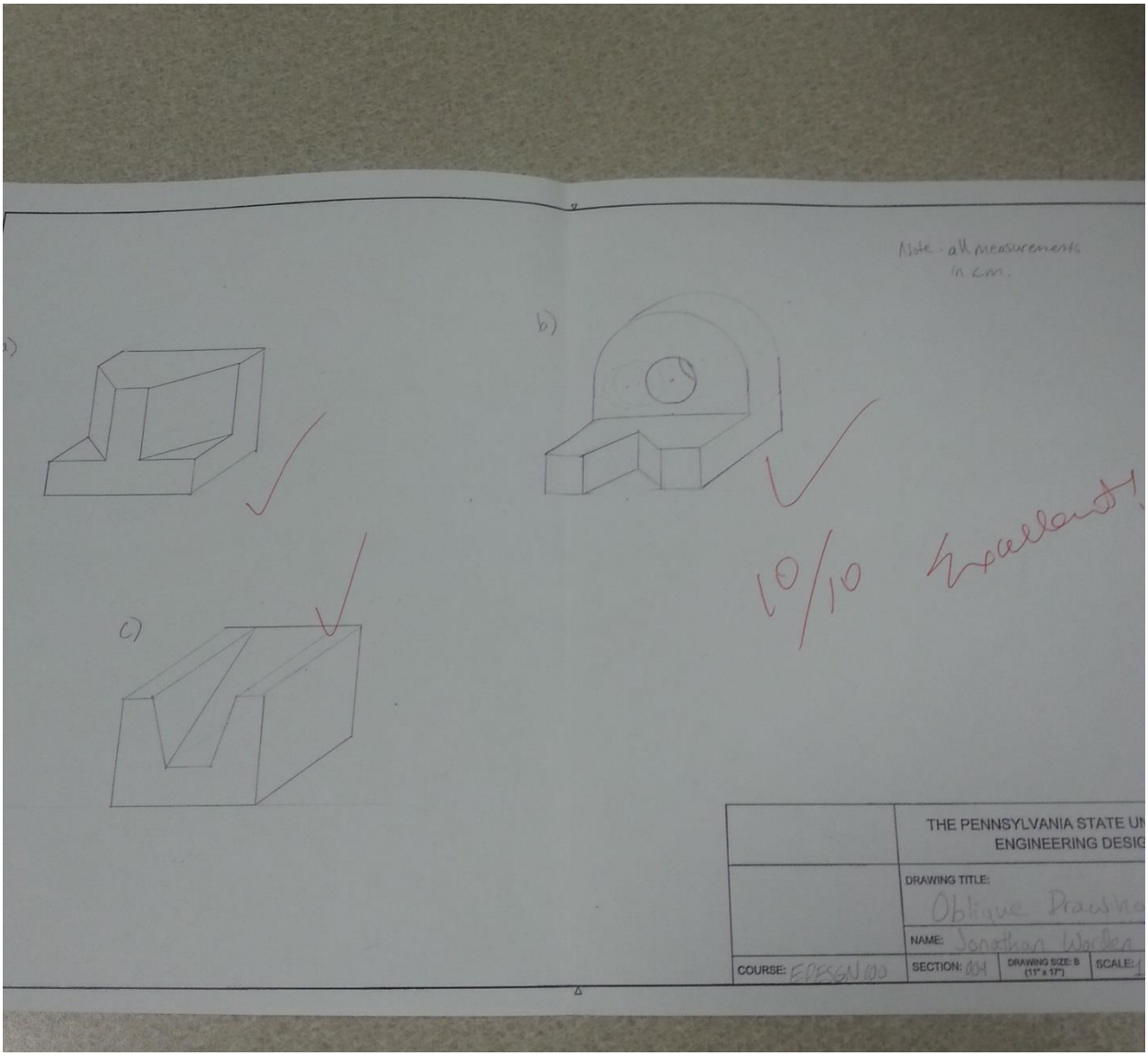

Fig 4. Oblique Drawings of Various Shapes.

First Design Project

Project Description:

The idea of the dumpling maker is to design and make a prototype of a machine which can produce at least 10 dumplings in a minute, and which is also easy to operate, clean and store. Under these stipulates and within the interviews of several Chinese restaurants the design was reshaped several times and eventually the final decision was made. The prototype came out through these conditions is named “Dumpling Chef” which fits these stipulates and has a fairly low cost. The prototype contains four assembly parts which can be cleaned and stored easily. Additionally, it contains a lot of plastic material and simplified steps to lower the cost which are what the interviewed Chinese restaurants looking for. Within the lowest cost and highest efficiency this prototype was designed and built.

Fig 5. Solid Model of the Dumpling Maker (Prototype)

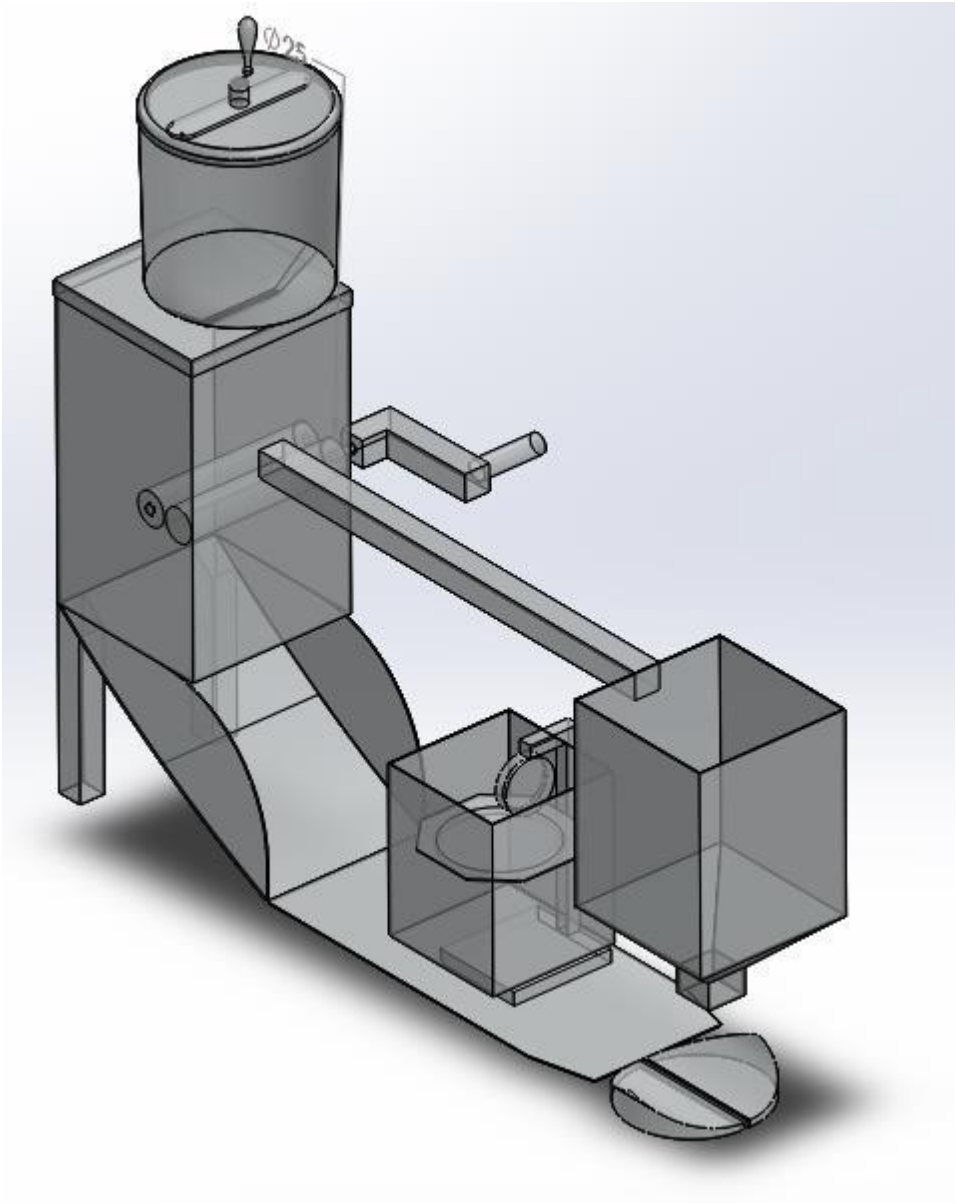

Fig 6. SolidWorks Model of the Dumpling Maker.

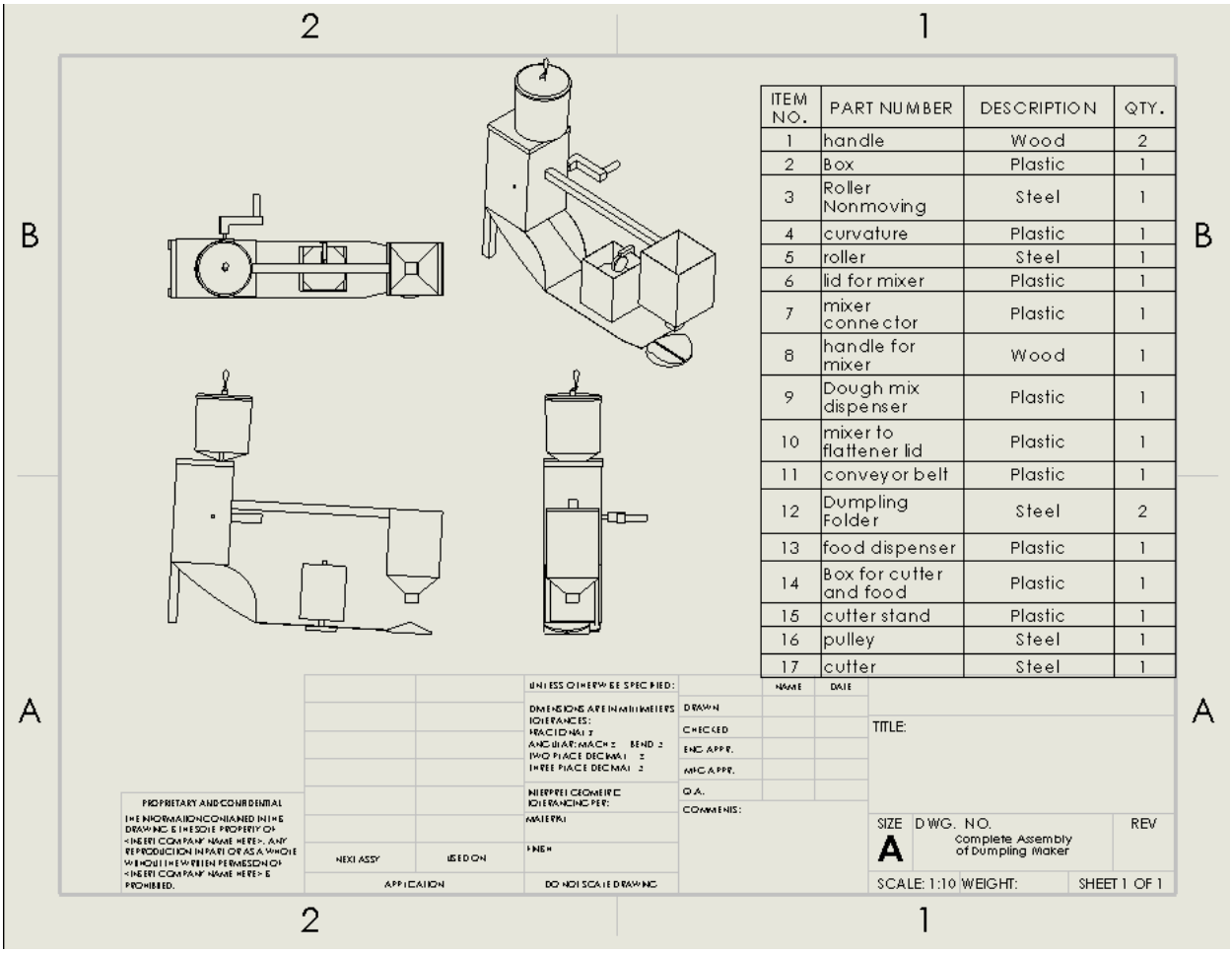

Fig 7. Assembly Drawing of the Complete Dumpling Maker.

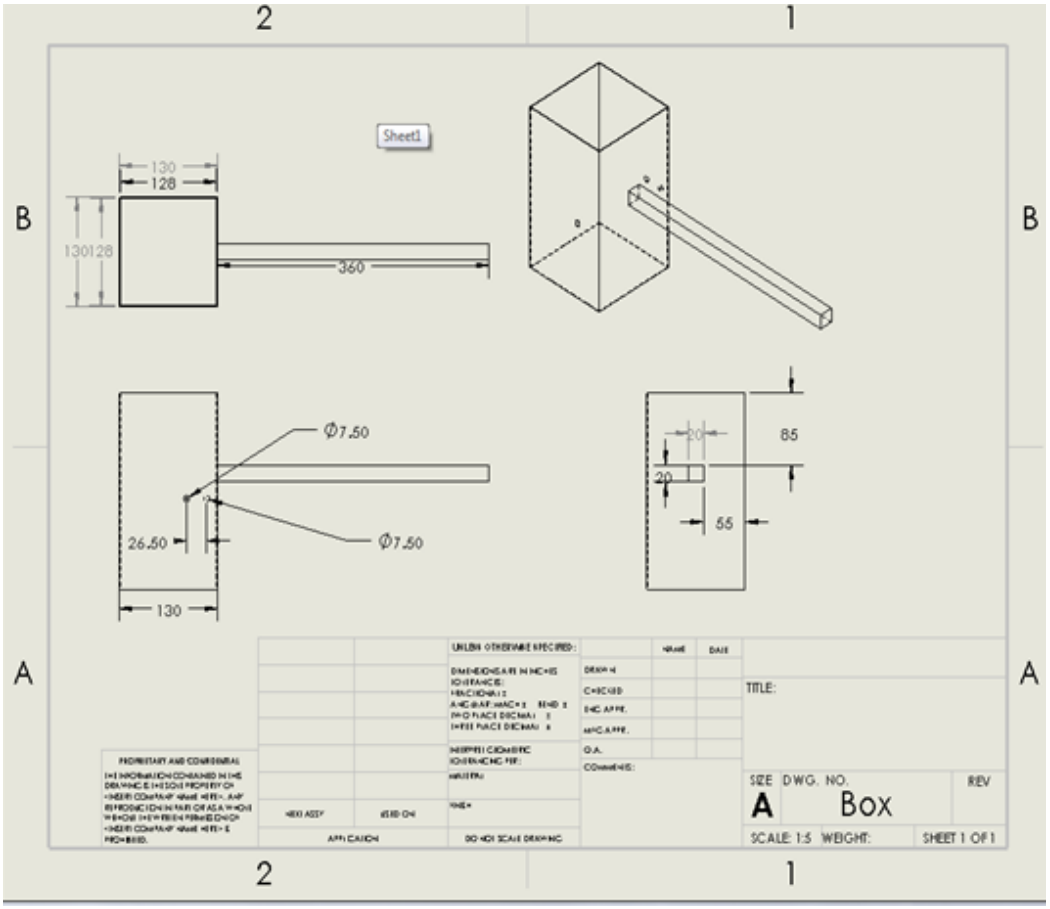

Fig 8. Multi-View Drawing of Dough Flattener.

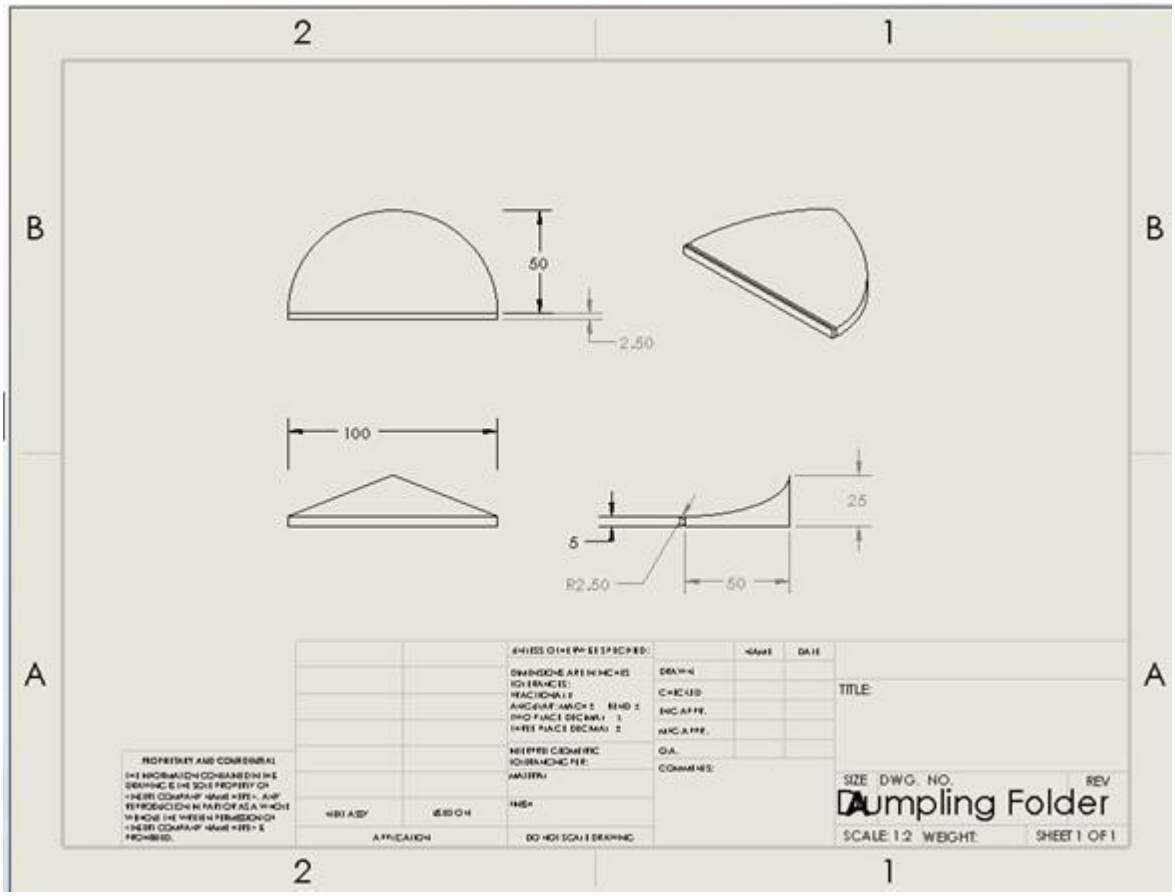

Fig 9. Multi-View Drawing of the Dough Folder.

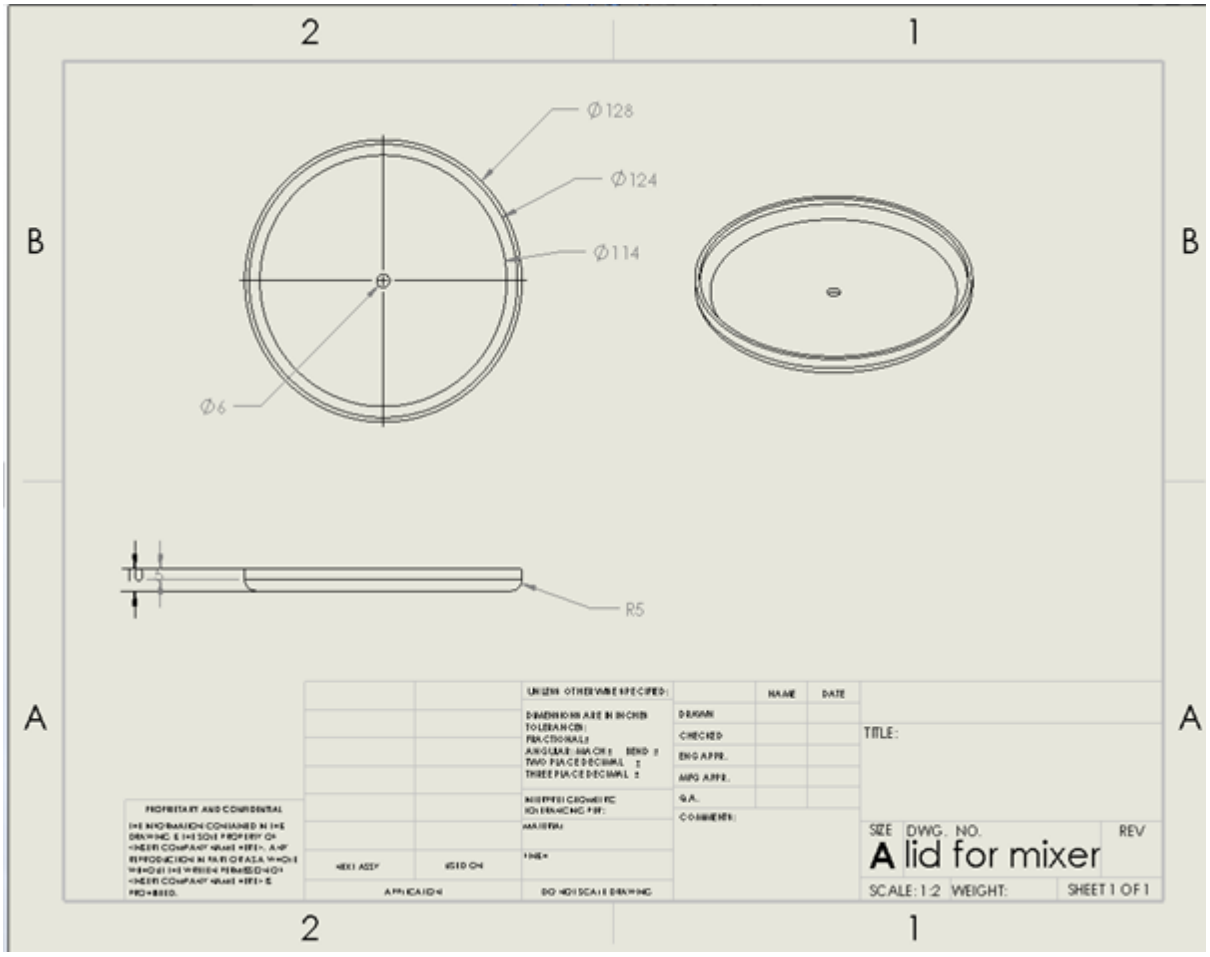

Fig 10. Multi-View Drawing of the Lid of the Mixer.

Main Design Features:

The Main Design Features, include some of the above. There is first the Mixer, in which the dough can be made and processed. Then there is the Flattener, this is inside the shoot right below the mixer. After the dough is flattened, a conveyor belt then moves the dough through the cutter, which is the hanging box shape. Then finally the dough makes it to the food filler, it compresses a packet that squeezes out the dumpling filling, then after the filling, the dough can then be folded over and closed by the folder.

Second Design Project

Project Description:

The design detailed in this report is the product of an engineering problem proposed by Xinli Wu and Penn State's sponsor General Electric to all Engineering Design Sections. Each group had to research locomotives and shipping alternatives in order to create a design that would reduce emissions in the fictional city of Pittsadelphia. The subsequent document details the task, process, outcome, and takeaways of Group 3 from Engineering Design 100 Section 9, Fall 2015.

Fig 11. Prototype of the Liquid Natural Gas Engine with a mounted EGR system.

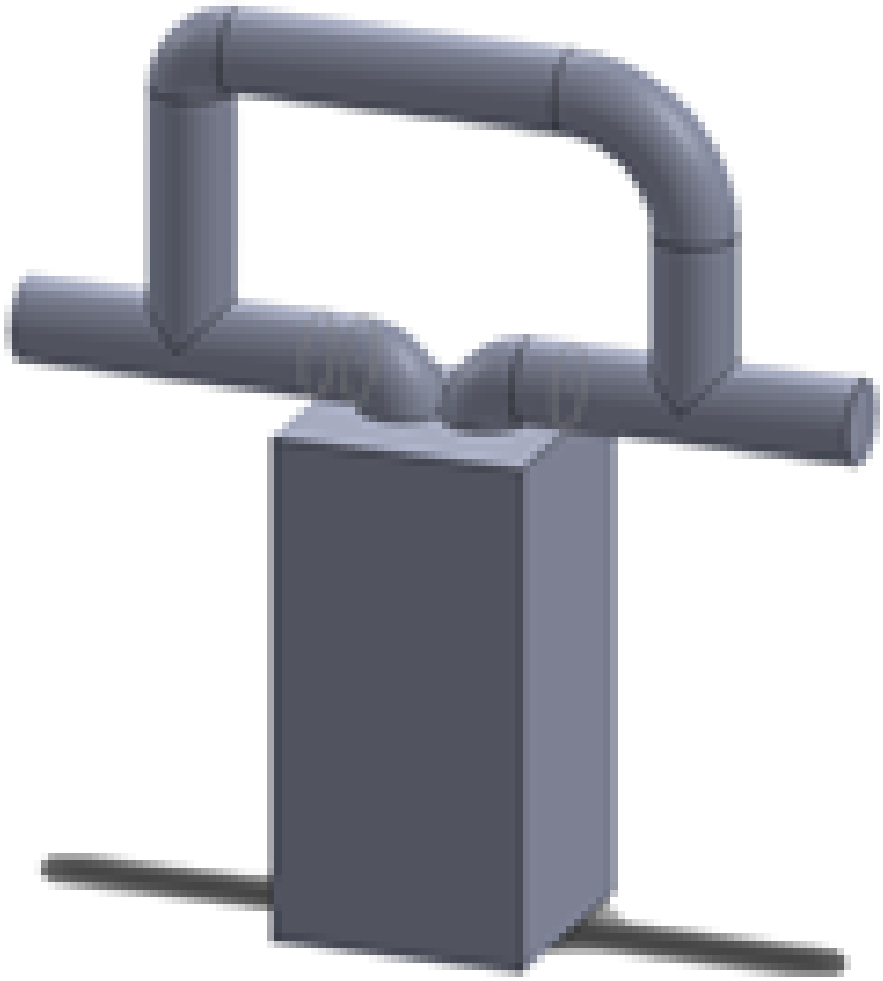

Fig 12. 3D SolidWorks Model of Prototype.

Main Design Features:

The main design features of this project has very few. As a team, the idea of implementing an abundant cheap fuel first came to thought. The fuel was switched from diesel to liquid natural gas. The design consists of selling the tier 2 fleet and buying tier 3 locomotives. Locomotive features will consist of buying NextFuel™ Natural Gas Retrofit Kits. EGR systems (Engine Gas Recirculation) will be implemented on all of the engines. Design 4 also features port injection consisting of an 80% liquid natural gas and 20% diesel within the cylinder during combustion. These design features allow to be cost efficient and produce less emissions by 85% which is more than the regular tier 4 locomotive.

Summary and Conclusions:

Over this first semester, the various skills have been obtained. These skills are such as drawing working drawings, oblique drawings, isometric drawings, section views and various other drawing techniques. Also utilizing SolidWorks to make 3D shapes of objects and use this skill to allow a greater image of various design projects. To conclude about the first design project, during the constructing of the prototype the team faced constraints of materials needed for the product and had to use what resources were available in order to construct the design. To learn from this project, the team could go into more depth of brainstorming to generate more ideas. Also time management played a role in this project which the team will definitely learn from. In conclusion the Dumpling Chef is durable, safe, efficient, and cost effective. After the first design project, the second design project was a huge accomplishment. The second design project can be concluded as utilizing various ideas of the different efficient fuel of liquid natural gas and implementing an EGR system to make the locomotive to tier 4. This project was a huge success for the team because as a team, the award of best design communication was conquered. The competition sponsored by General Electric had six various awards and the team had won one of the awards against 27 other sections. In all, this semester has been a great and knowledgeable experience.

Acknowledgement:

Thanks to Professor Xinli Wu for teaching the various techniques throughout the semester.

Thanks to my teammates on separate design projects.