Personal CAD Project: Basketball Hoop

By: Jack Titus

I picked a basketball hoop for my personal CAD project because I wanted to create something I really liked and sports are activities I have a lot of fun doing. I have played basketball since I was 5 and played for my middle school and high school teams. Knowing almost everything about the game, I knew what in my mind a good basketball hoop would look like. The basketball hoop I created is one that you could find at a park or could be bought at any local sporting goods stores with the dimensions of a professional basketball hoop in terms of height and backboard size. The main reason why I chose to create a basketball hoop was that I knew that it would issue me a challenge that I would keep my interest and is a product that I would want to finish.

Some major struggles included creating the support for the backboard. The angles were hard to create and mating them was not easy. Also having to align them separately was time consuming and difficult. One thing that was also difficult but necessary was the addition of bolts to the metal parts of the backboard. It took some detailed viewing of picture sources and time to create this support. The creation and mating of the rim and net took some time and maneuvering as well to get it how I wanted.

As I said earlier I am a huge basketball player and fan of college and NBA basketball (of the Philadelphia 76ers even though we stink) so this project relates directly to one of my major hobbies. Creating this has defiantly increased my appreciation for the game and for the people who actually came up with the original design of a basketball hoop from when it started from a peach basket and a ball to what it is today.

During the personal CAD project I learned to master all the main tools of solid works. That being the drawing tool, dimensioning, knowing what plane to be in, extruded base, planes, and cuts. Let just say I am **way** more advanced than I thought I would be when angrily using solid works at the beginning of the year, now I find it to be pretty fun. The fun parts I found about this project was making so many

separate parts and being able to put them all together in assembly. Though I spent more hours on this solid works project than I probably should have with all my failures, I actually really enjoyed making the basketball hoop. It was challenging at first which was frustrating but when I finally reached the final product it was really fulfilling.

One thing I really liked about SolidWorks was how much it really allows you to create accurate models of every engineered item we see today. From my basketball hoop to our first tutorial, Solid works allows us to create our ideas and figures and take them to real life. It was fun and rewarding learning solid works this semester, and gave me skills that I hope to develop even more and know I will use in my future as an engineer.

A closer look at my personal CAD project:

Figure 1 (Below): Top View

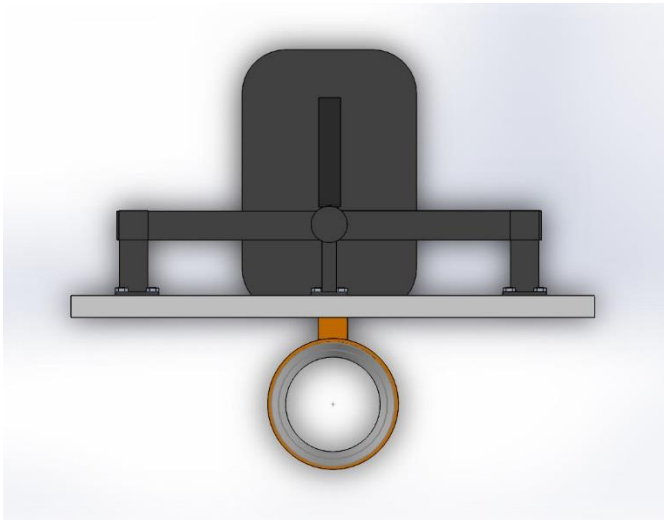

Figure 2 (Below): Front view

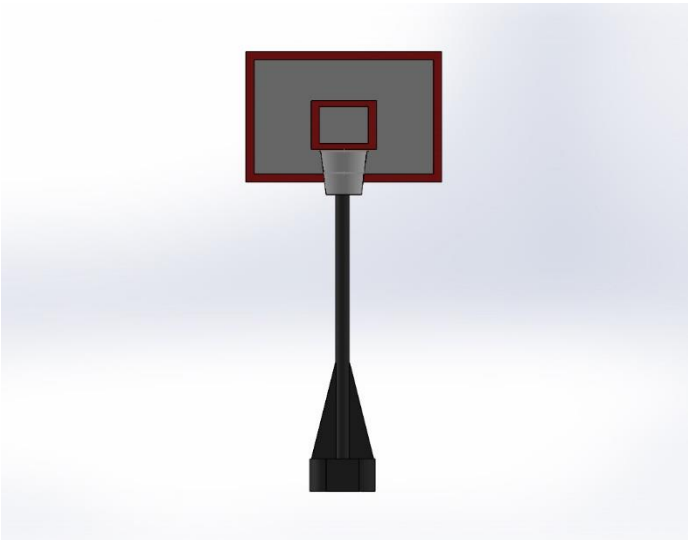

Figure 3: Right View

The Challenges of the Backboard:

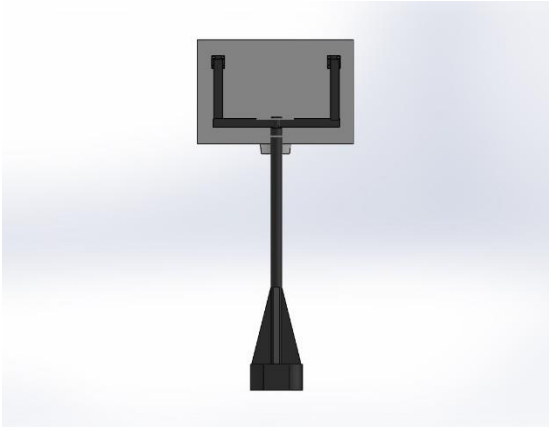

Figure 4 (Above): Back View

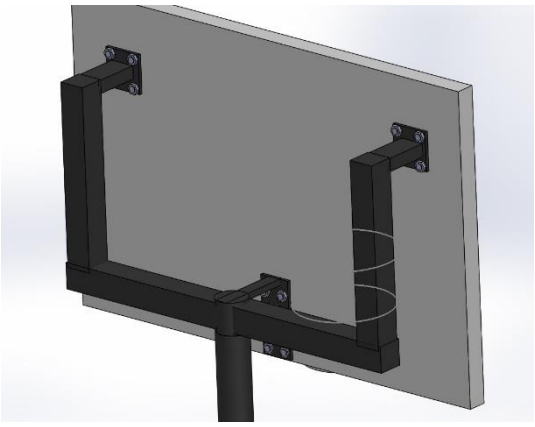

Figure 6 (Above): Creating the support for the backboard was also a challenging part of this project with creating its shape and also the little details like adding the bolts to the backboard were difficult as well.

Figure 5 (Above): Creating the rim and net and mating them all together was a challenging part of this project.

Figure 7 (Below): Drawing of my basketball hoop showing the multi-view for front, top, and right with their dimensions along with the isometric drawing.

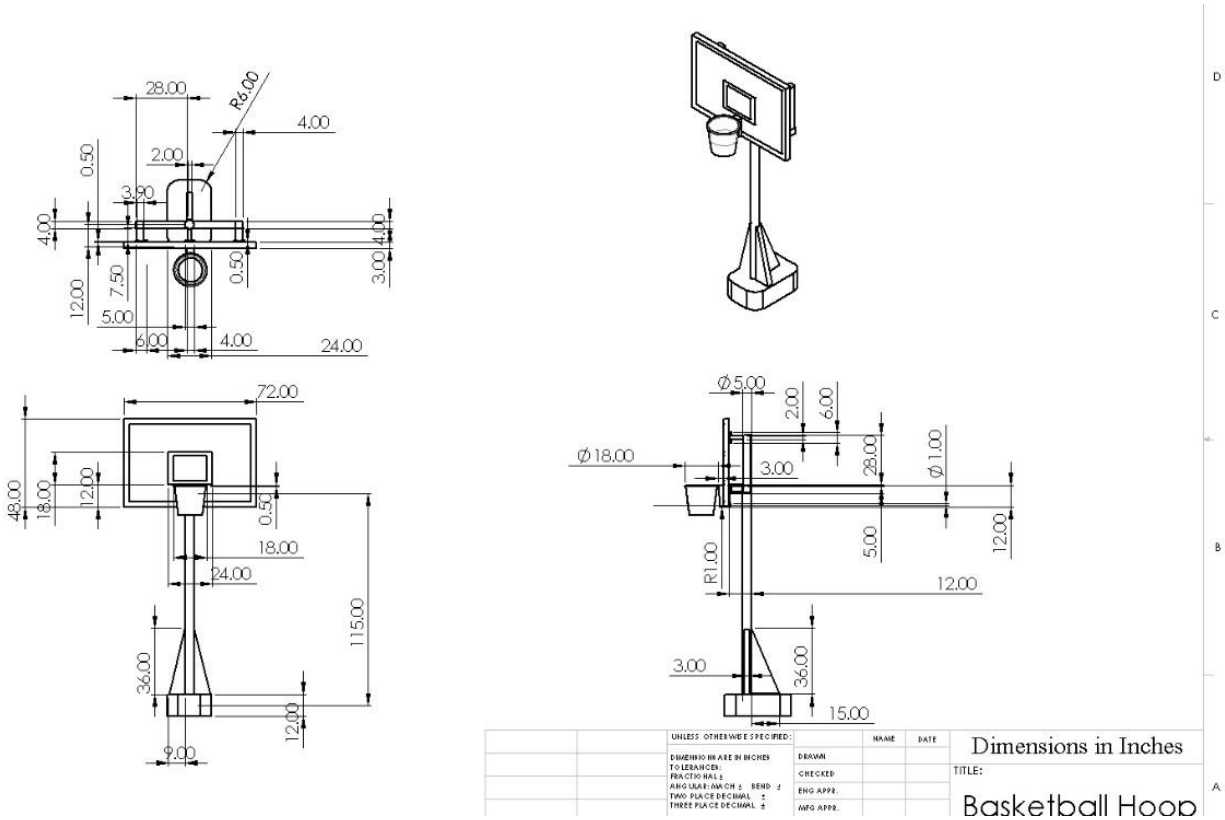

Reference Pictures:

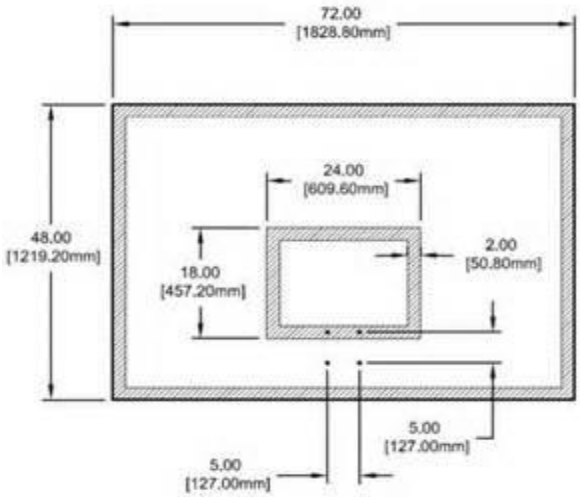

Figure 8 (Above): Reference picture to create backboard
http://www.basketballhoopsonline.com/basketball_backboard_sizes_and_dimensions.htm

Figure 9 (left): Reference picture for the hoop
http://www.revmikewilliams.org/basketball-hoop-dimensions-backboard

Figure 10 (right): reference picture for
hoophttp://www.hayneedle.com/product/spaldingresidentialslamportablehoop.cfm

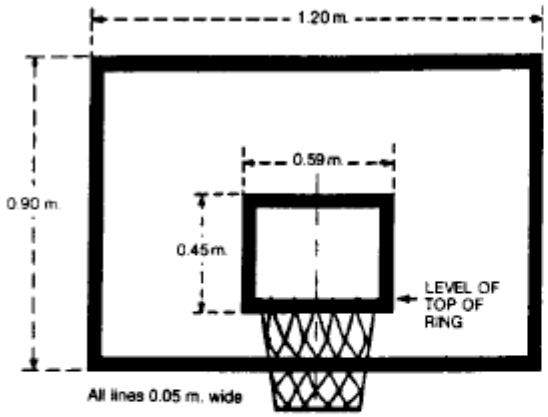

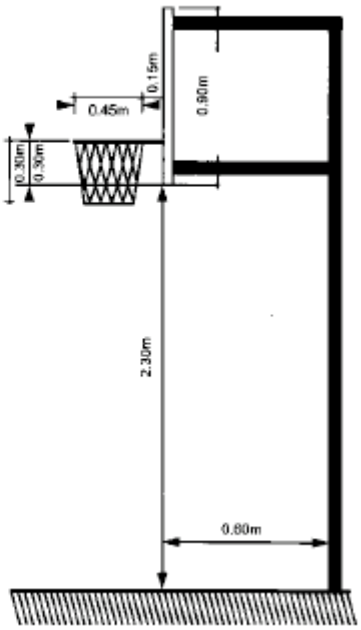

Figure 10: Reference picture for height and net dimensions
http://www.daaa.org/DAAA_sportRules.html