Coffee Mug for People with Hand Disabilities

Jack Deal, Jaclyn Kamenicky, Elizabeth Roach, Amir Amiri

Team 6

Introduction to Engineering Design

Junfeng Ma

The Pennsylvania State University

March 4 2016

COFFEE MUG FOR PEOPLE WITH HAND DISABILITIES

Abstract

Millions of people drink coffee everyday. According to Harvard's School of Public Health, 54% of American adults drink coffee everyday [1]. To the average person, drinking a cup of coffee is often done without thought. However, for some people, this task is very difficult. People who are missing fingers or have hand disabilities have a very difficult time drinking coffee without the assistance of others. In order to find a solution to this problem, we, as engineering design students, will research and analyze current coffee mug designs and design a coffee mug for people with hand disabilities. Through this design process, we will use an analytical hierarchy process which enables them to rank the customer needs. In addition, a concept generation tree will be created in order to figure out the different possible designs. After the possible designs have been selected, prototyping and testing will be done in order to select the best design. The final design will enable customers with at least one-finger to enjoy a hot beverage like coffee or tea without feeling disabled.

***Key Words**:* Design Process, Coffee Mug, One Finger, Hand Disabilities, Analytical Hierarchy Process

I. Introduction

Every year there are around 2,000 upper extremity amputations in the United States [2]. In addition to the amputations that occur each year, there also hundreds of people who are born with missing fingers and other handicaps that disable them from the movement and flexibility in their hands and fingers. Many of these people are restricted from daily activities that the average

person takes for granted. One of these tasks includes enjoying a cup of coffee. Just because they are disabled does not take away their right to be able to drink hot beverages just like the average person.

The need for products that accommodate to people who are missing fingers/hands is on the rise. Some of these accommodations are simple and easily implemented in everyday life such as a handicapped button for a door. However, there is still much progress that can be made in order to make these people more mobile as well as feel like they no longer have a disability.

As aspiring engineers, our goal was to find and analyze current coffee mug designs and then create or improve a design so that it is better suited for a one-fingered disabled person. The idea behind it was that if a person with one-finger could use the mug, then the average person could also use it. In addition to our goal of creating a better suited mug, we also wanted to create a product that would not make our customer stick out if he or she were to use it in public. Many disabled people already feel like they stick out in public, and we want to make sure that if they are using our product they feel as normal as possible.

II. Literature Review

The external search step of our design matched with patent US 5490622 A [3]. This patent was created for a product whose primary market is for non-disabled people; however, there are aspects that are similar to what we wanted to incorporate in our design. For example, this mug has an adjustable strap that was intended to be used by a driver of a vehicle as holding mechanism where the customer could attach the strap to a stationary object so that his/her coffee mug does not spill or tip while operating a vehicle. Similarly, for our design, we wanted to

create a mug that had an adjustable strap as well, but for a different reason. We wanted an adjustable strap to be an aspect of our mug so that it could be held differently by each customer to best suit their needs, whether they have a full hand of fingers or just one.

III. Design Process

We first started our design process by determining our first layer attributes. We took 5 attributes into account: flexibility, durability, user-friendly, aesthetics, and efficiency. By using the Analytical Hierarchy process, we determined that user-friendly was most important attribute when creating our product (see appendix 1 for AHP). The weight of the user-friendly attribute was 38.5%. Efficiency and Durability were both ranked as the second most important attributes to our design product at a weight of 23.1%. Finally, our design team thought that aesthetics and flexibility were the least important attributes, which were both weighted at 7.7%. These five main attributes were further developed and explained using subcategories.

These subcategories were then ranked again using the analytical hierarchy process. For the first layer attribute of flexibility, we determined that there were four second layer attributes that contribute to flexibility (easy to adjust, lightweight, easy to clean, easy to transport). On the flexibility criterion, lightweight was the most important (46.8%), followed by easy to transport (27.2%), easy to clean (15.9%), and lastly, easy to adjust (10.1%). We used this same process for determining the most important second layer attributes for the other four first layer criterion.

After our first and second layer attributes were chosen, we narrowed down our number of attributes to the two or three most important second layer attributes for each individual first layer attribute. This enabled our design team to compare all the different possible combinations

of attributes for our produce more easily since we had narrowed the selection (see appendix 2 for concept generation tree). Our baseline combination was lightweight, made of a strong/sturdy material, comfortable, had a shape that was aesthetically pleasing, and had an efficient volume/surface area ratio. We ended up having 31 other possible combinations for our design. Each of these combinations was labeled with a letter, which represented the first layer attribute, and a number, which represented the second layer attribute. These letter/number codes were organized in an excel spreadsheet (see appendix 3 for concept scoring table), which enabled us to narrow down the combination more easily. We narrowed the 32 possible combinations down to 3. To narrow it down to our top design, we used the concept scoring table which included weight of importance, rating, and weighted score. The final design had a combination code of A2B1C1D1E2.

IV. Conclusion:

Through using the engineering design process, we were successful in designing a mug that could be used by one-fingered disabled people. By using the analytical hierarchy process, we were able to determine the first and second layer attributes that were most important to our design team that we ultimately wanted to incorporate in our final design. The concept scoring and ranking enabled us to rank and compare the different combinations of second layer attributes so that we made sure we were creating the best possible product. We decided that our final concept would have an adjustable strap, made of strong and sturdy material so that it wouldn't break easily, have a comfortable feeling when being used, is aesthetically pleasing, and has an overall simple design. We firmly believe that we were successful in achieving our

goal of creating a mug that could be used by a one-fingered disabled person to drink hot beverages.

V. Final Design Model

See appendix 4 for SolidWorks Model

VI. References

[1] Coffee by the Numbers. (2010). Retrieved March 03, 2016, from http://www.hsph.harvard.edu/news/multimedia-article/facts/

[2] "Online Learning Center." *Focus on Upper Extremity: Therapeutic Advances*. N.p., n.d. Web. 06 Mar. 2016.

[3] Tardif, Pierre. Commuter Mug and Holder Assembly. Patent US5490622 A. 13 Feb. 1996. Print.

Appendix 1: Analytical Hierarchy Process

	Flexible	**Durable**	**User Friendly**	**Good Design**	**Efficiency**	Total (RI)	Weight
Flexible	1	0.333	0.2	1	0.3333	2.8663	0.077135
Durable	3	1	0.6	3	1	8.6	0.231432
User Friendly	5	1.666	1	5	1.66667	14.3227	0.38544
Good Design	1	0.333	0.2	1	0.3333	2.866	0.077135
Efficiency	3	1	0.6	3	1	8.6	0.231432
Total						37.1593	1
Flexible	Easy to adjust	Lightweight	Easy to clean	Easy to transport	Total (Ri)	Weight	
Easy to adjust	1	0.33	1	0.2	2.53	0.09992101	
Lightweight	3	1	3	0.6	7.6	0.448	
Easy to clean	1	0.33	1	0.2	2.53	0.149	
Easy to transport	5	1.66	5	1	12.66	0.254	
Total					25.32	1	
DURABLE	Long-lasting	Can withstand hot temperatures	Strong material	Total(Ri)	Weight		
Long-lasting	1	0.33	0.33	1.66	0.14236707		
Can withstand hot temperatures	3	1	1	5	0.42881647		
Strong material	3	1	1	5	0.42881647		
Total				11.66	1		
User-Friendly	Microwavable	Comfortable	Doesn't burn customer	Total (Ri)	Weight		
Microwavable	1	0.33	0.33	1.66	0.14236707		
Comfortable	3	1	1	5	0.42881647		
Doesn't burn customer	3	1	1	5	0.42881647		
Total				11.66	1		
Good Design	Shape	Size	Art Style	Color	Aesthetic	Total(Ri)	Weight
Color	1	0.2	1	1	0.33	3.53	0.072638
Size	5	1	5	5	1.667	17.667	0.36354
Art style	1	0.2	1	1	3	6.2	0.127579
Shape	3	0.6	3	3	1	10.6	0.21812
Aesthetic	3	0.6	3	3	1	10.6	0.21812
Total						48.597	1
Efficiency	Space	Handling	Volume	Total (Ri)	Weight		
Space	1	0.333	0.333	1.666	0.1423		
Handling	3	1	1	5	0.428816		
Volume	3	1	1	5	0.428816		
Total				11.66	1		

Appendix 2: Concept Generation Tree

Appendix 3: Concept Scoring

	A1B1C1D1E1	A1B1C1D1E2	A1B1C1D2E1	A1B1C1D2E2	A1B1C2D1E1	A1B1C2D2E1	A1B1C2D1E2	A1B1C2D2E2	A1B2C1D1E1
Flexible	0	0	0	0	0	0	0	0	0
Durable	0	0	0	0	0	0	0	0	-
User-Friendly	0	0	0	0	-	-	-	-	0
Aesthetics	0	0	-	-	0	-	0	-	0
Efficiency	0	+	0	+	0	0	+	+	0
Sum +	0	1	0	1	0	0	1	1	0
Sum 0	5	4	4	3	4	3	3	2	4
Sum -	0	0	1	1	1	2	1	2	1
Net Score	0	1	-1	0	-1	-2	0	-1	-1
Rank	4	2	11	4	11	22	4	11	11
Continue?	No	Yes	No	No	No	No	No	No	No

		A1B1C1D1E2		A2B1C1D1E1		A2B1C1D1E2	
Selection Criteria	Weight	Rating	Weighted Score	Rating	Weighted Score	Rating	Weighted Score
Flexible	20%	3	0.6	4	0.8	4	0.8
Durable	25%	3	0.75	3	0.75	3	0.75
User- Friendly	30%	3	0.9	3	0.9	3	0.9
Aesthetics	10%	3	0.3	3	0.3	3	0.75
Efficiency	15%	3	0.45	2	0.3	3	0.45
Total Score			3		3.05		3.65
Rank			3		2		1
Continue?			No		No		Yes
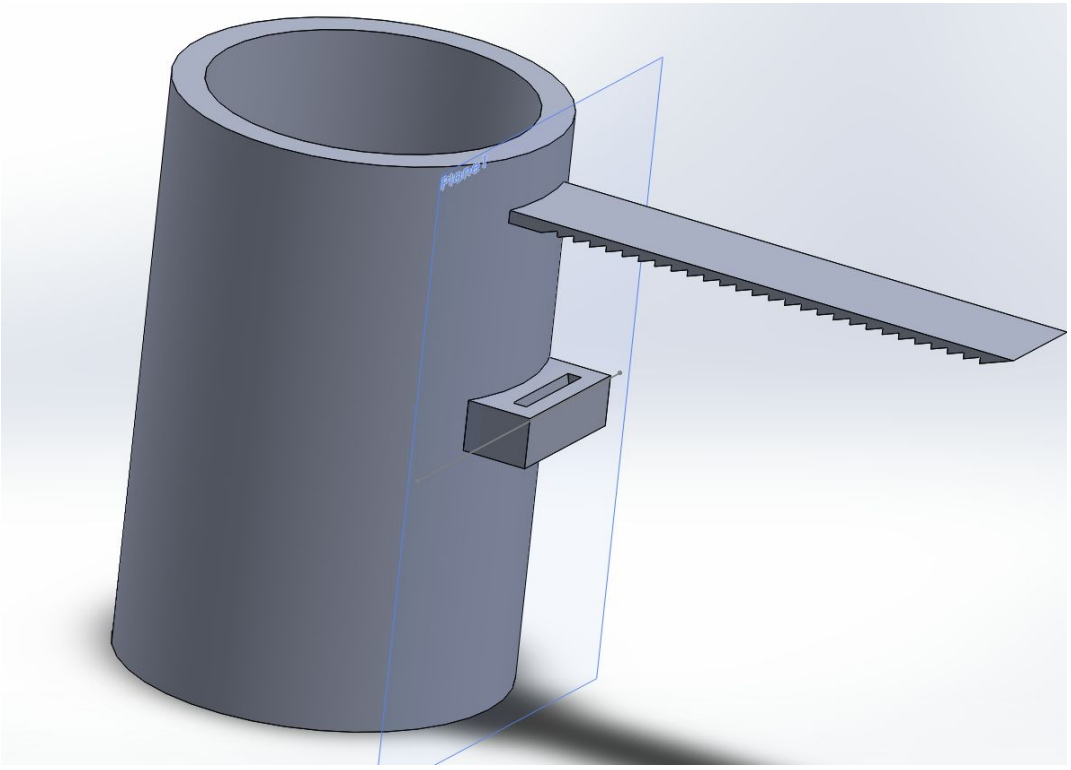
Appendix 4: Solidworks Model