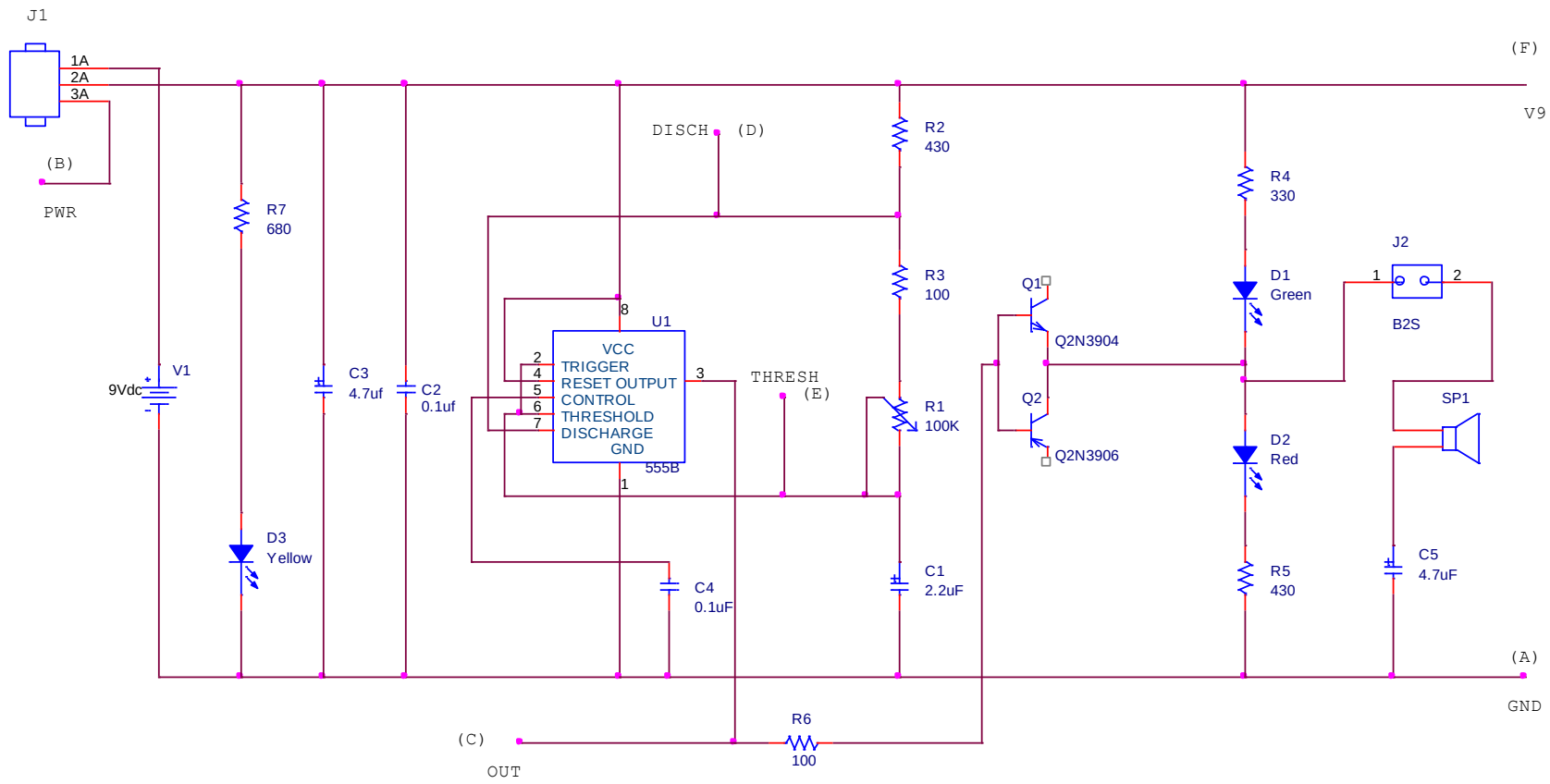


| | | |
|---|---|---|
| Title<br>Joshua Lynch | | |
| Size<br>A | Document Number<br>Ringer | Rev<br><Rev Code> |
| Date: Wednesday, October 24, 2007 | Sheet 1 of 1 | |