Coffee Mug for Disabled People with One Finger

Clare Gervino, Kevin Platt, Tyler Updegrave, and Joe Dashler

Department of Civil, Mechanical, and Biomedical Engineering

School of Engineering Design

The Pennsylvania State University, University Park, PA 16802, USA

Abstract

Today businesses have to take into account many different things (cost, consumer type, price, etc.) which have all become important parts design process of one of a company's' new products. Products for people with disabilities are important and do not come at an abundance for objects we use in our daily lives like coffee mugs. We took it upon ourselves to figure out a design for this type of product since there were not many patents, as we found through our research of the topic. We looked through patents online and through Google patents and did not find much in the market for mugs for people with one finger. Our design was unique and we found the right design through the use of the design process using customer needs, concept tables, concept screening, and concept scoring. We analyzed all of our different results from this table and found to make a mug with a wrist strap and a ring for one of the four fingers that is not amputated and a ring for the thumb.

Keywords: Disabilities, Coffee mug, One Finger, Design Process

Coffee Mug for Disabled People with One Finger

Introduction

One in five people have a disability in the United States and these disabilities can range along a very wide spectrum. Although not many people may have an injury that limits them to one finger because of amputations or birth defects, as engineers it is our job to locate a problem and try to solve it. Even small majorities need help and we took it upon ourselves to make sure that we help people and can change people's lives. Drinking coffee is a daily thing for many people and it should not just be limited to the people who have use of both of their hands. Through our use of the design process that we learned about we were able to test different ideas and find what the best for design for this new type of mug should be.

Literature Review (Patent)

The design for our mug is entirely original and was constructed through the minds of our team. Even though we looked at examples of other mugs, our design is a new and improved version that has not yet been offered in the market. Other mugs failed to offer a design that would incorporate people with many different disabilities. For example, one mug on the market is made to help people with only an index finger safely drink from an open mug with an problems. Where our mug differs is that our design can be used by people with only one middle finger or only one thumb, too. This is very important because it opens up a new market with new customers looking to buy. While the other mug specialized in only one finger, and will still be able to keep their market strong. Plus, our mug design differs from others due to the materials it's made from. While many mugs for disabled people are made out of plastics and rubber, ours is made out of high quality materials like stainless steel in order to normalize the

mug and make it appear like the average mug. So our design will be a new product that differs from any other product on the market today.

Design Process

Before we started to design anything, we first had to decide what we wanted our mission statement to be. Our product is described as a one finger held mug that can be used with any finger and any hand. Our key business goals are to make mugs accessible to disabled people. We want to have our product launched by the end of second quarter of 2016, and we want 10% of the disabled mug market by the end of 2017. Our primary market is disabled people with one finger, and our secondary market is their family and friends or any person who wants to be able to hold a mug with only one finger. We assume that our model will be reusable, lightweight, and be able to be used with any finger. The stakeholders are disabled people, friends and family, as well as retail. After coming up with all of the components of our mission statement, we were ready to start the actual design process.

The next part of the design process was to determine what needs the customers wanted met in their coffee mug. We decided that the most important features to have in our design was that the coffee mug would be user-friendly, durable, flexible, portable, and easy to clean. We then came up with subcategories for each main category. Under user-friendly we said that the mug should be lightweight, microwave safe, safe, balanced, have a no slip grip, have heat resistant material, be able to hold a sufficient amount, and be easy to fill. in terms of being durable, we wanted the mug to be drop-proof and reliable. Under flexible, we said that the mug should be able to be used with whatever finger and whatever hand, can be used with different sized hands, and can be used with hot and cold drinks. In terms of being portable, we

wanted the mug to be able to fit in a cup holder, be able to be carried for extended periods of time, and insulated. Another important aspect of the design was that it would be easy to clean, meaning that it would be both dishwasher safe and easy to hand wash. Once we had decided what we thought the customers would want in their design, our next step was to determine which aspects were the most important.

In order to rank our customer needs, we created an Analytical Hierarchy Process (AHP) for the main five categories and then one for all of the subcategories. By doing these rankings, we were able to systematically determine which concepts were the most important.

User-friendly	1	6.67	4	1.33	2	15	.374
Durable	.15	1	4	1.33	2	8.48	.212
Flexible	.25	.25	1	2	4	7.5	.187
Portable	.75	.75	.5	1	.33	3.33	.083
Easy to clean	.5	.5	.25	3	1	5.75	.144
Total						40.06	

	light weight	microwave safe	safe	balanced	no slip grip	heat resistant material	able to hold sufficient amount	easy to fill	drop-proof	reliable	use with whatever finger and whatever hand	can be used with different sized hands
light weight	1	2	0.3	0.33	0.33	0.2	0.25	0.2	0.2	0.2	0.11	0.14
microwave safe	0.5	1	0.3	0.33	0.5	0.2	0.33	0.143	0.143	0.2	0.11	0.143
safe	3	3	1	1	1	0.33	2	0.33	1	1	0.2	0.33
balanced	3	3	1	1	0.5	0.2	0.33	0.2	0.2	0.33	0.11	0.143
no slip grip	3	2	1	2	1	0.2	0.33	0.2	0.33	0.2	0.143	0.143
heat resistant material	5	5	3	5	5	1	2	1	1	1	0.2	0.33
able to hold sufficient amount	4	3	0.5	3	3	0.5	1	0.2	0.33	0.2	0.143	0.143
easy to fill	5	7	3	5	5	1	5	1	1	0.33	0.2	0.2
drop-proof	5	7	1	5	3	1	3	1	1	0.33	0.33	0.33
reliable	5	5	1	3	5	1	5	3	3	1	0.33	0.33
use with whatever finger and whatever hand	9	9	5	9	7	5	7	5	3	3	1	1
can be used with different sized hands	7	7	3	7	7	3	7	5	3	3	1	1
used with hot and cold drinks	5	5	0.5	1	1	0.5	1	1	1	1	0.33	0.2
fit in cup holder	3	3	0.5	2	2	0.5	0.5	0.5	1	0.5	0.1	0.2
can carry for extended periods of time	3	3	0.5	1	1	0.1	0.5	0.5	1	0.5	0.1	0.2
insulated	1	1	0.5	1	0.5	0.1	0.1	0.5	0.5	0.5	0.1	0.2
dishwasher safe	5	5	0.5	3	5	1	5	3	3	1	0.5	0.5
easy to hand wash	3	5	0.5	3	5	1	5	3	3	1	0.5	0.5

used with hot and cold drinks	fits in cup holder	can carry for extended periods of time	insualted	dishwasher safe	easy to hand wash	Total (Ri)	Weighting (wi)
0.2	0.33	0.33	1	0.2	0.33	7.68	0.012262494
0.2	0.33	0.33	1	0.2	0.2	6.189	0.009881846
2	2	2	2	2	2	26.19	0.041817021
1	0.5	1	1	0.33	0.33	14.173	0.02262973
1	0.5	1	2	0.2	0.2	15.446	0.024662302
2	2	10	10	1	1	55.53	0.08866358
1	2	2	10	0.2	0.2	31.416	0.050161265
1	2	2	2	0.33	0.33	41.39	0.06608654
1	1	1	2	0.33	0.33	33.65	0.053728245
1	2	2	2	1	1	41.66	0.066517643
3	10	10	10	2	2	101	0.16126457
5	5	5	5	2	2	78	0.124540955
1	1	1	2	0.2	0.2	22.93	0.036611847
1	1	1	1	0.33	0.33	18.46	0.029474693
1	1	1	1	0.2	0.2	15.8	0.025227527
0.5	1	1	1	0.143	0.143	9.786	0.0156251
5	3	5	7	1	1	54.5	0.087019
5	3	5	7	1	1	52.5	0.083825643
						626.3	

After determining and ranking the customer needs, we then began our concept combination table. There are three columns of the table, one having to do with the handle, one with the mouth of the cup, and the other with the body. For the handle we came up with three different designs, the first being one where there would be a hole going into the cup that you could stick your hand through. The second design still had a hole going into the mug but also had a handle that your finger could go through. The last handle design has a finger hole and a wrist strap for extra support. We had four different designs for the mouth of the mug. The first one is a circular mouth, the second one has a lid, the third one has a spout, and the last one has a square mouth. In terms of the shape of the body, our first design was just to have a standard shaped and sized body. We also thought of doing a square-shaped body and a body that has a hole for your finger to go through. Based on our different ideas, we had thirty-six different possibilities for what the mug could look like.

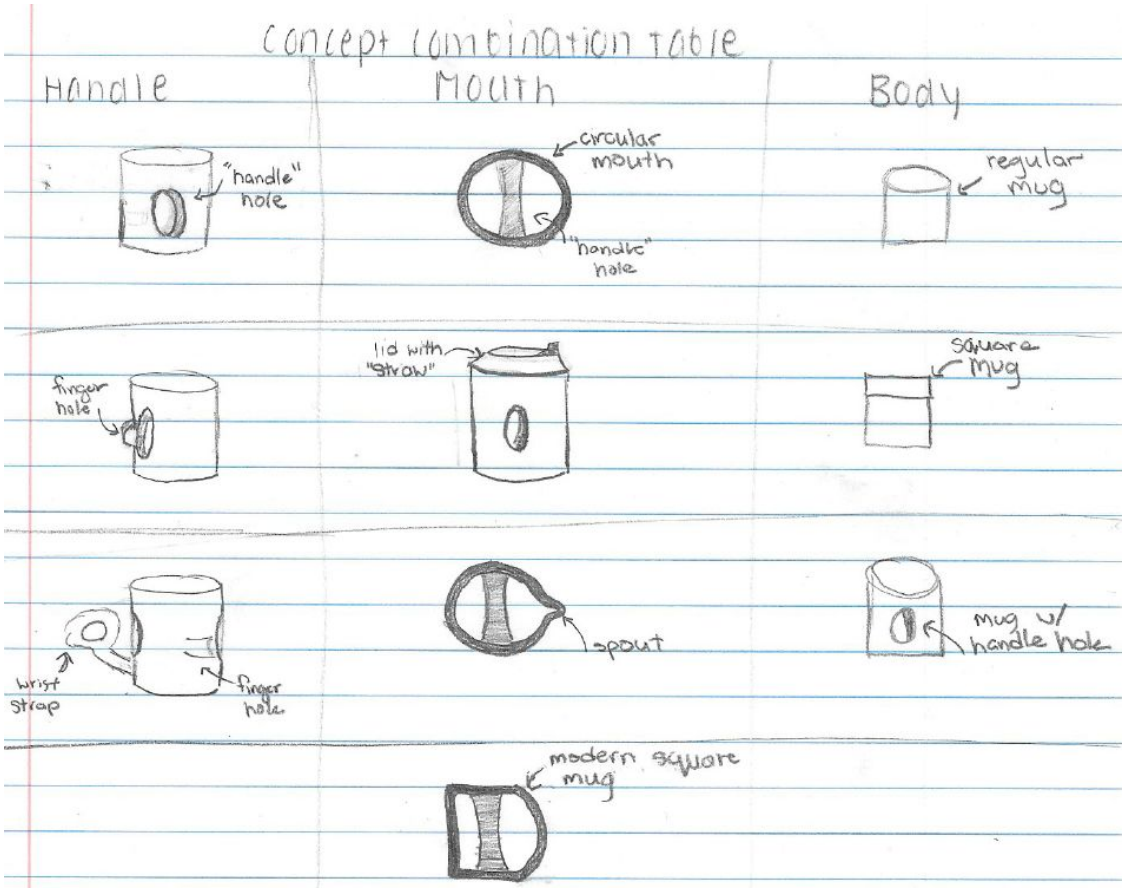

After coming up with our thirty-six concepts, we had to decide what combination of those concepts would best encompass what we wanted in our final design. In order to do this we created a concept scoring chart. In the chart we took our top ten customer needs and compared each of thirty six combinations to each of the concepts in order to see which one would work the best overall. After completing the table we saw that there was twelve possible combinations that would meet the criteria that we wanted.

	A1B1C1	A1B1C2	A1B1C3	A1B2C1	A1B2C2	A1B2C3	A1B3C1	A1B3C2	A1B3C3	A1B4C1	A1B4C2	A1B4C3	A2B1C1	A2B1C2	A2B1C3	A2B2C1	A2B2C2	A2B2C3	A2B3C1	A2B3C2	A2B3C3	A2B4C1	A2B4C2	A2B4C3
use with whatever finger and whatever hand	0	0	0	0	0	0	0	0	0	0	0	0	-1	-1	-1	-1	-1	-1	-1	-1	-1	-1	-1	-1
can be used with different sized hands	0	0	0	0	0	0	0	0	0	0	0	0	0	0	0	0	0	0	0	0	0	0	0	0
heat resistant material	0	0	0	0	0	0	0	0	0	0	0	0	0	0	0	0	0	0	0	0	0	0	0	0
dishwasher safe	0	0	0	0	0	0	0	0	0	0	0	0	0	0	0	0	0	0	0	0	0	0	0	0
easy to hand wash	0	-1	-1	-1	-1	-1	-1	-1	-1	-1	-1	-1	0	0	-1	0	0	-1	0	0	-1	0	0	-1
easy to fill	0	0	0	0	0	0	0	0	0	0	0	0	0	0	0	0	0	0	0	0	0	0	0	0
reliable	0	0	0	0	0	0	0	0	0	0	0	0	0	0	0	0	0	0	0	0	0	0	0	0
able to hold sufficient amount	0	-1	-1	-1	-1	-1	-1	-1	-1	-1	-1	-1	0	0	-1	0	0	-1	0	0	-1	0	0	-1
drop proof	0	0	0	0	0	0	0	0	0	0	0	0	0	0	0	0	0	0	0	0	0	0	0	0
safe	0	0	0	1	1	1	1	1	1	0	0	0	0	0	0	1	1	1	1	1	1	0	0	0
Sums 1's	0	0	0	1	1	1	1	1	1	0	0	0	0	0	0	1	1	1	1	1	1	0	0	0
Sums 0's	10	8	8	7	7	7	7	7	7	8	8	8	9	9	7	8	8	6	8	8	6	9	9	7
Sums -1's	0	2	2	2	2	2	2	2	2	2	2	2	1	1	3	1	1	3	1	1	3	1	1	3
Net Score	0	-2	-2	-1	-1	-1	-1	-1	-1	-2	-2	-2	-1	-1	-3	0	0	-2	0	0	-2	-1	-1	-3
Rank	5	26	26	14	14	14	14	14	14	26	26	26	14	14	33	5	5	26	5	5	26	14	14	33
Continue?	yes	no	no	no	no	no	no	no	no	no	no	no	no	no	yes	yes	no	yes	yes	no	no	no	no	

A3B1C1	A3B1C2	A3B1C3	A3B2C1	A3B2C2	A3B2C3	A3B3C1	A3B3C2	A3B3C3	A3B4C1	A3B4C2	A3B4C3
1	1	1	1	1	1	1	1	1	1	1	1
0	0	0	0	0	0	0	0	0	0	0	0
0	0	0	0	0	0	0	0	0	0	0	0
-1	-1	-1	-1	-1	-1	-1	-1	-1	-1	-1	-1
0	0	-1	0	0	-1	0	0	-1	0	0	-1
0	0	0	0	0	0	0	0	0	0	0	0
0	0	0	0	0	0	0	0	0	0	0	0
0	0	-1	0	0	-1	0	0	-1	0	0	-1
0	0	0	0	0	0	0	0	0	0	0	0
0	0	0	1	1	1	1	1	1	0	0	0
1	1	1	2	2	2	2	2	2	1	1	1
8	8	6	7	7	5	7	7	5	8	8	6
1	1	3	1	1	3	1	1	3	1	1	3
0	0	-2	1	1	-1	1	1	-1	0	0	-2
5	5	26	1	1	14	1	1	14	5	5	26
yes	yes	no	yes	yes	no	yes	yes	no	yes	yes	no

After going through this entire process, we were able to take our top twelve combinations and create a concept scoring table. In the table we first gave weighted percentages to our top ten customer needs. We then compared each concept combination to each of the ten criteria and gave it a ranking, and then used the ranking to get a weighted score. We then found the total score and were able to rank the twelve combinations based on that. Seven of the combinations were tied with the highest ranking, so we were able to use those combinations to create our final design of the mug.

	A	B	C	D	E	F	G	H	I	J	K	L	M	N
1			A1B1C1		A2B2C1		A2B2C2		A2B3C1		A2B3C2		A3B1C1	
2	Selection Criteria	Weight	Rating	Weighted Score	Rating	Weighthed Score	Rating	Weighthed Score	Rating	Weighthed Score	Rating	Weighthed Score	Rating	Weighthed Score
3	use with whatever finger and whatever hand	25%	3	0.75	2	0.5	2	0.5	2	0.5	2	0.5	4	1
4	can be used with different sized hands	20%	3	0.6	3	0.6	3	0.6	3	0.6	3	0.6	4	0.8
5	heat resistant material	15%	3	0.45	3	0.45	3	0.45	3	0.45	3	0.45	3	0.45
6	dishwasher safe	10%	3	0.3	3	0.3	3	0.3	3	0.3	3	0.3	3	0.3
7	easy to hand wash	5%	3	0.15	4	0.2	3	0.15	2	0.1	1	0.05	2	0.1
8	easy to fill	5%	3	0.15	3	0.15	3	0.15	3	0.15	3	0.15	3	0.15
9	reliable	5%	3	0.15	3	0.15	3	0.15	3	0.15	3	0.15	3	0.15
10	able to hold sufficient amount	5%	3	0.15	3	0.15	3	0.15	3	0.15	2	0.1	3	0.15
11	drop proof	5%	3	0.15	3	0.15	3	0.15	3	0.15	3	0.15	3	0.15
12	safe	5%	3	0.15	3	0.15	3	0.15	3	0.15	3	0.15	3	0.15
13														
14	Total Score		3		2.8		2.75		2.7		2.6		3.4	
15	Rank		8		9		10		11		12		1	
16	Continue		No		No		No		No		No		Yes	

O	P	Q	R	S	T	U	V	W	X	Y	Z
A3B1C2		A3B2C1		A3B3C1		A3B3C2		A3B4C1		A3B4C2	
Rating	Weighted Score	Rating	Weighted Score	Rating	Weighted Score	Rating	Weighted Score	Rating	Weighted Score	Rating	Weighted Score
4	1	4	1	4	1	4	1	4	1	4	1
4	0.8	4	0.8	4	0.8	4	0.8	4	0.8	4	0.8
3	0.45	3	0.45	3	0.45	3	0.45	3	0.45	3	0.45
3	0.3	3	0.3	3	0.3	3	0.3	3	0.3	3	0.3
2	0.1	2	0.1	2	0.1	2	0.1	2	0.1	2	0.1
3	0.15	3	0.15	3	0.15	3	0.15	3	0.15	3	0.15
3	0.15	3	0.15	3	0.15	3	0.15	3	0.15	3	0.15
3	0.15	3	0.15	3	0.15	3	0.15	3	0.15	3	0.15
3	0.15	3	0.15	3	0.15	3	0.15	3	0.15	3	0.15
3	0.15	3	0.15	3	0.15	3	0.15	3	0.15	3	0.15
	3.4		3.4		3.4		3.4		3.4		3.4
	1		1		1		1		1		1
Yes		Yes		Yes		Yes		Yes		Yes	

Design Result

The design process allowed us to determine the design we would use for the mug. We decided on a mug that had two handles to make it work for people with any finger including the thumb. After we completed the design process, we then went on to prototyping our design and seeing if our vision for our one fingered coffee mug would be plausible. FIrst off we made the mug out of clay. The clay allowed us to see what our design would look like and to actually bring the whole design process to life. After we made the clay design, we then went on to design the mug on SolidWorks. This proved quite challenging at times but was very rewarding. We ended up with a design that looked like this:

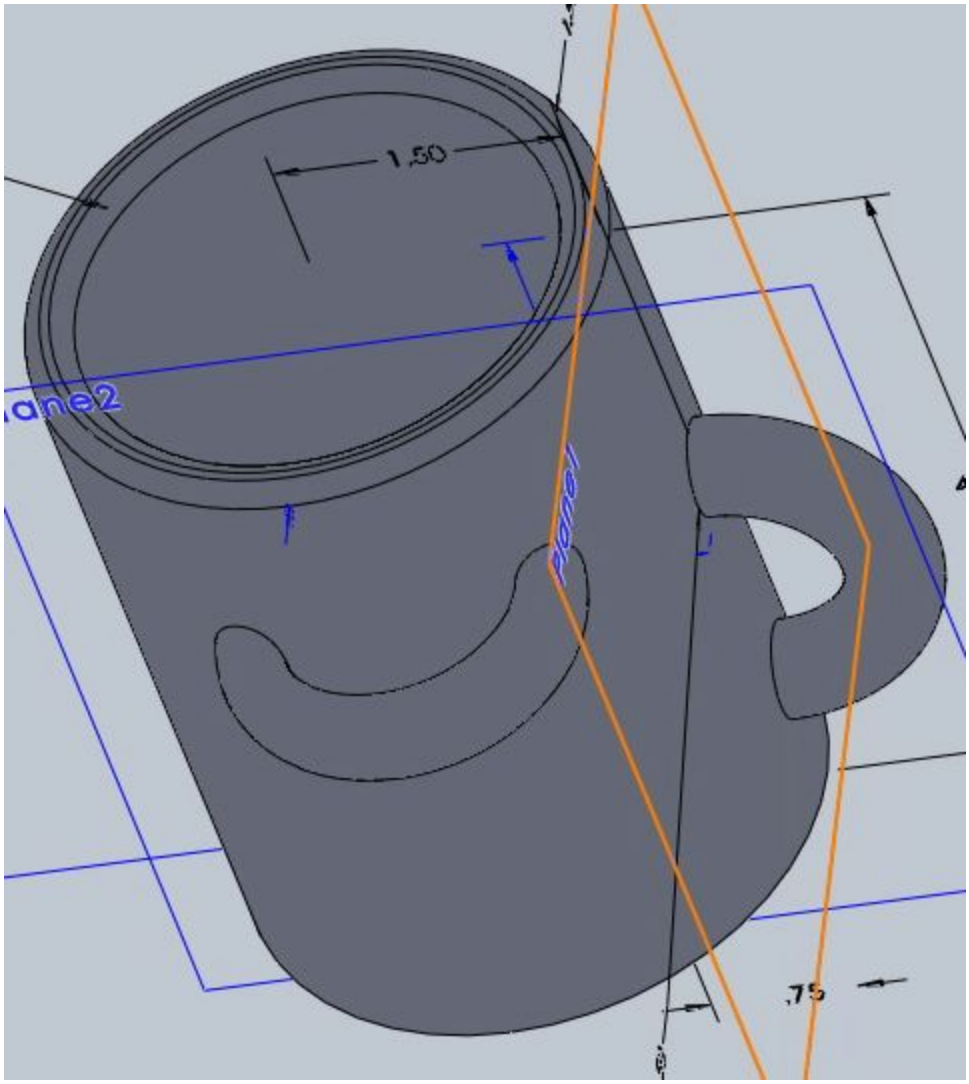

After we had the SolidWorks model created, we could then 3-D print our final prototype.

Conclusion and Summary

Our design will help people with disabilities safely and efficiently drink coffee without any issues. And with a design very similar to the average coffee mug, people won't have to think about their disabilities when enjoying their drink. When we designed our mug this was a very important idea we kept in mind in order to ensure the happiest of our customers. We want people to be able to pick up our mug easily without a distracting design, so it feels and looks as normal as a person without disabilities. After discussing several designs, we were finally able to come up with a design that fits all the needs to make our mug work. The subtle design that we finally prototyped works for disabilities involving any finger, to provide to a larger market instead of only focusing on one certain finger. Also our mug will be produced with high quality materials to make the mug last longer and ensuring that it will sell in the stores. Overall, this coffee mug will help improve the life of many people with disabilities and make it easy to enjoy any drink of their choice.

References

Bryant, Edwards. 1957-11-29. *Patent Identifier No. US2905350A.* Location: Cup for hot beverages