Alcoa Aluminum Bicycle Basket Project

Edesign 100, Section 14

Team 3, Submitted to: Smita Bharti, 12/16/2013

Kurt Lindhult, ksl5163@psu.edu
Greg Ratzell, gtr5031@psu.edu
Jonathan Cisney, jgc5198@psu.edu
Minho Chung, mwc5697@psu.edu

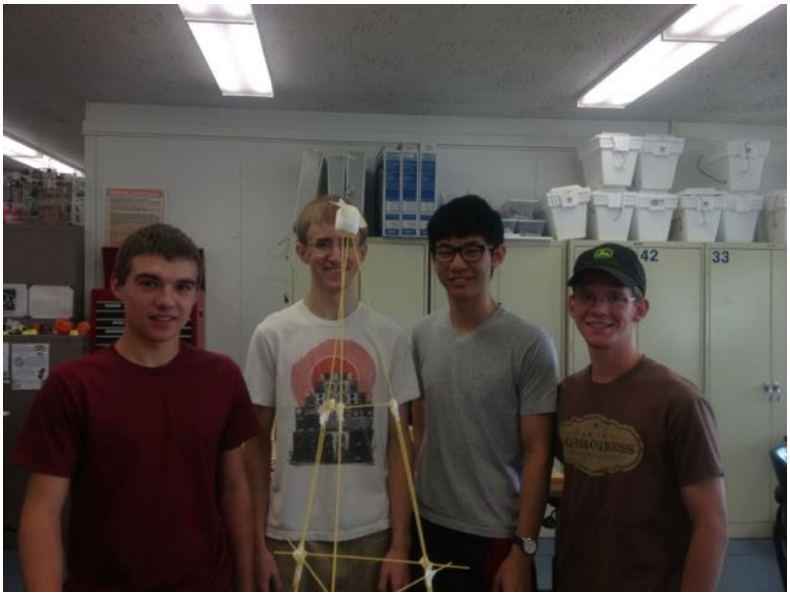

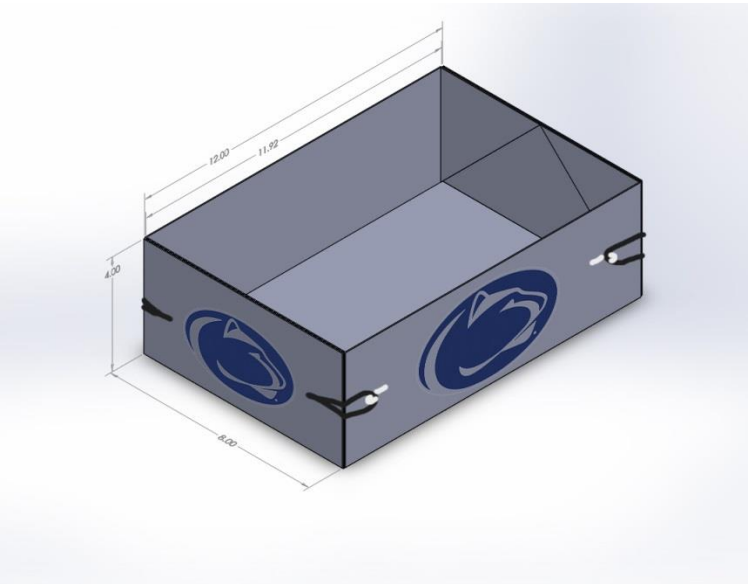

Abstract

This design project was sponsored by Alcoa, who desired an aluminum product that could be implemented in a system on the Penn State campus to improve efficiency or sustainability using aluminum's intrinsic properties. After considering several product options, the decision was made to design a collapsible aluminum box that could be attached to the back of a bicycle. This product increases campus sustainability in multiple ways and is a product that Alcoa would be able to sell to Penn State, who would certainly be able to sell to Penn State students. The finished product is both sustainable and convenient for the many bicycle commuters here at Penn State.

Introduction

Since the beginning of the new millennium, bicycle commuting has increased almost 62 percent in the United States, and State College is no exception. The increasing number of students who commute to class and around town greatly improves sustainability in the community, but transportation of many items becomes a large problem when using a bicycle to get around. For this reason, our team decided to design a collapsible aluminum box that could be attached to the back of many bicycles and branded by Penn State to sell to students. Although there are already many products designed that improve transportability of large items by bicycle, our team wanted to design a product that was not only more recyclable, but easier to transport.

Most bicycle bags are currently made out of polyester or plastic. There are several different mounting positions that have been utilized by other projects, such as mounting the bags on both sides of the rear wheel, called panniers. Transportation volume has also been maximized by placing bags on the front of the bike or strapped to the top tube, but many are made of polyester, which is not nearly as recyclable as aluminum because it is made of petroleum. Sometimes metal baskets are placed on the front of the handlebars or plastic milk crates are bungee tied to a rack on the back, but our team searched for a design that improved these and would be more sustainable than plastic products.

Customer Needs Analysis

One of the first steps in the design process was properly assessing the customer's needs. By analyzing the values and principles of Alcoa, we felt that we would gain a better understanding of how to tailor our product to fit those and ultimately provide a better product marketed towards Alcoa. In the following List, we took statements about Aluminum, as well as Alcoa, and ranked from 1-5, with 5 being highest, on how these statements reflect Alcoa's beliefs as it pertains to our product.

- Aluminum is a lightweight, strong, and versatile material.	4
- From the Wright flyer to the Boeing 787 Dreamliner, from cookware to high performance automobiles, aluminum has been the material of choice.	5
- Today, increasing the efficiency of energy usage and seeking solutions that are increasingly sustainable are of extreme importance, and aluminum can provide solutions to meet these critical needs.	5
- Its strength and light weight allow aircraft and ground vehicles to save fuel while providing us with the performance we need.	3
- Aluminum is highly recyclable, allowing new products to be created with a fraction of the energy use without sacrificing performance.	4
- In fact, over 70% of the aluminum ever produced remains in use today.	4
- Alcoa is the world's leading producer of primary and fabricated aluminum, as well as the world's largest miner of bauxite and refiner of alumina.	4
- In addition to inventing the modern-day aluminum industry 125 years ago, Alcoa innovation has been behind major milestones in these markets:	
- Aerospace	5
- Automotive	3
- Packaging	3
- Building and Construction	4
- Commercial Transportation	4

After analysis of Alcoa's customer needs, we asserted that our product was going to able to fill a niche potential market, as well as play to Alcoa's existing beliefs and principles.

Problem Statement

Many students at Penn State use bikes for easy transportation, but often cannot hold everything that they want to transport. This causes problems when trying to shuttle more than a backpack's worth of materials across campus.

Solution Statement

We propose that using the high strength and corrosion resistance of aluminum to make a bike-attachable storage solution would be beneficial to bike commuters and to the university. These storage solutions could be manufactured by Alcoa and sold by any of the university-affiliated stores to provide a viable storage solution to many. It would be collapsible for easy storage when not in use, as well as durable enough for everyday usage.

Target Specifications

The target specifications of the bicycle box were thoroughly thought through with how the box would be used in mind. The box needed to be able to fit and hold three textbooks, a backpack, or a six-pack of soda because these are the most likely items that the box will need to accommodate for. The box also needed to be strong enough to resist damage in the event of carrying heavy books or a crash where the box would hit the ground with force. One of the great benefits to using aluminum is that it is very strong and durable, so even if it were to be dropped hard, it is unlikely to break easily.

Another goal of the finished product was that it should be able to fold up into a relatively flat piece of aluminum measuring no larger than 12 inches by 8 inches. These numbers were obtained by figuring out what could easily fit in an average sized backpack, which is where the box could easily be stored and transported. The smaller the box is able to fold up, the easier the transportation of it is. One final target goal of the box was that it should be less than 3 pounds, which is the weight of a small plastic milk crate that many people attach to their bikes, and our goal was to design a better product than what is currently used.

Concept Selection and Generation

Position of Box on Bicycle

	Rear	Top Middle	Bottom Middle	Front
Ride ability of bike with box attached	+	0	+	-
Potential Damage to Carried Items	+	-	-	-
Total	2	-1	0	-2

Box Design

	Folding Corners	Plain Box	Side Panels with Corner Straps	Wire Basket
Assembly	+	+	0	+
Disassembly	+	-	0	-
Portability	+	-	+	-
Total	3	-1	1	-1

Model Solution

Before performing a sustainability report on the collapsible bicycle box, our team had to decide which specific aluminum alloy would be best used for the box. Using a table from Penn State's engineering website (found under references), our group decided that the 6061-T6 would be the best material to use. Although there are weaker and cheaper forms of aluminum that can be used, our bike box needs to be strong enough to hold whatever could be put into.

The goal was to choose a box that would be strong enough to hold whatever would be thrown into it using the cheapest alloy possible to maximize profits, while still producing a product that would not be so fragile that it would need to be replaced often. Therefore, the 6061-T6 aluminum alloy was chosen. Although not shown in the Solid works drawing, the corners of the box are hinged so that the box can easily fold down. There are also straps that hold the box together when it is unfolded.

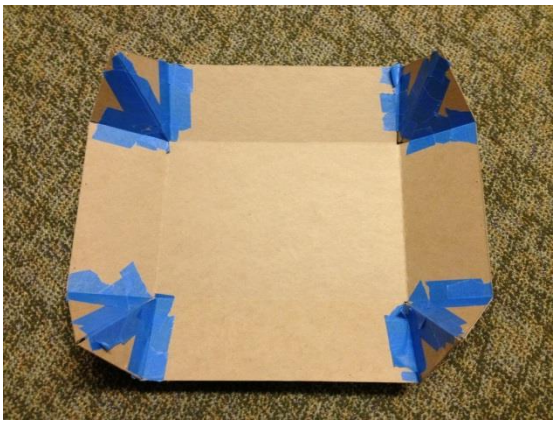

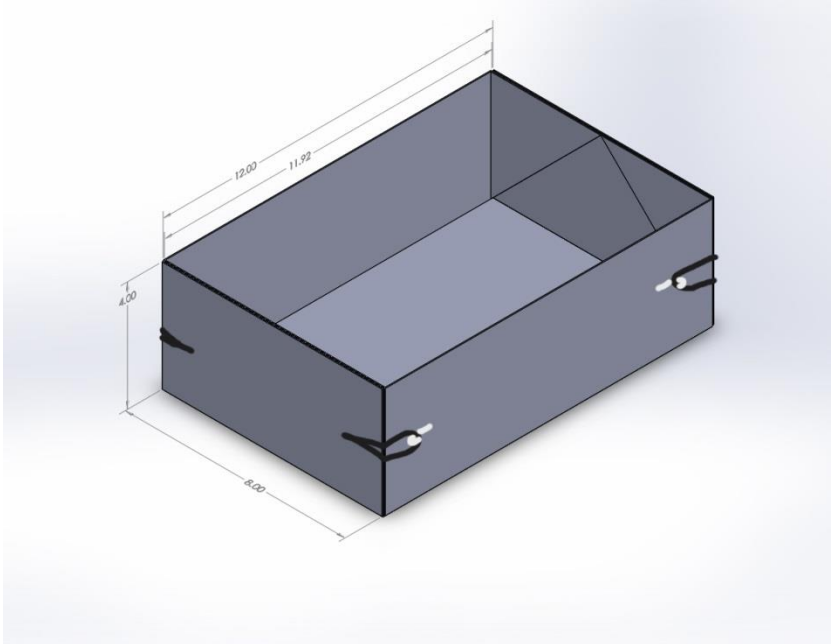

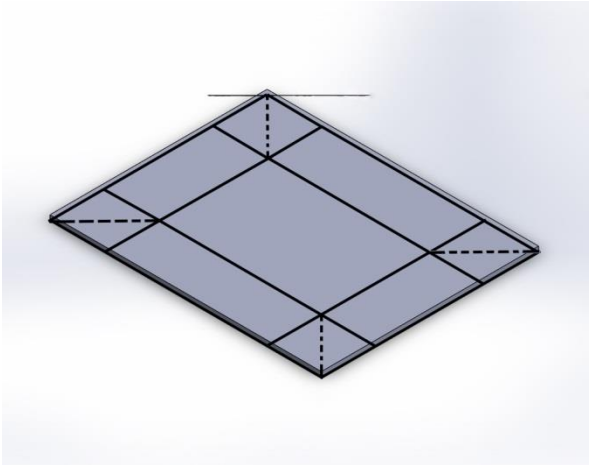

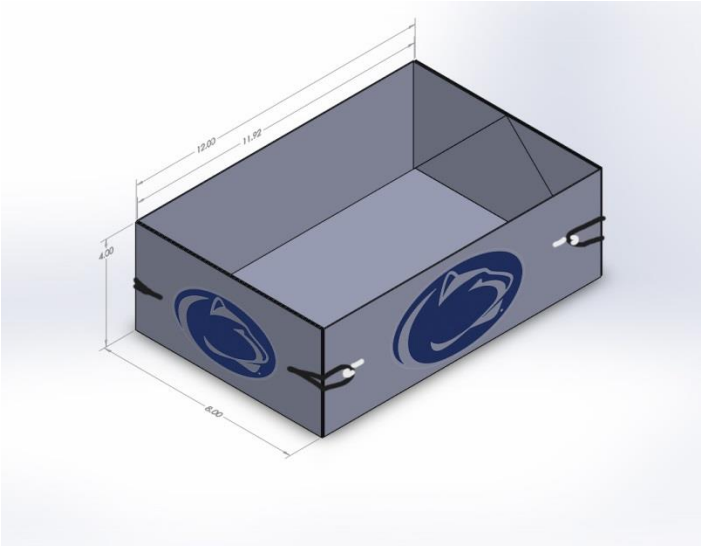

Solution Evaluation

When assessing whether our proposal would make a viable alternative for existing bicycle-mounted storage solutions, we focused on the characteristics of both. A common storage solution for bikes is milk crates, which are widely available and fairly easy to implement. However, they are made of brittle plastic that is vulnerable to breaking or shattering if it collides with the ground, especially if they are carrying cargo at the time. With our solution, however, the aluminum chassis provides much greater durability as well as resilience, vastly reducing the chance of catastrophic structural failure.

Another intrinsic shortcoming of the milk crate is the fact that it cannot be folded or stored when not in use, due to the rigid hard plastic that makes up the container. Our solution also addresses this potential problem by offering a way to fold and compact the model for easy storage and transportation when not in use, perhaps in a backpack or suitcase. IT is with these properties in mind that we believe that our solution has the potential to outperform milk crates as well as other bicycle-mounted storage solutions when it comes to durability and convenience.

Sustainability Summary

In order to find out how our product affected not only the end-user, but also the environment, we performed a sustainability analysis inside of Solidworks using our existing model. When looking for a good comparative material to put up against the 6061-T6 Aluminum, we came upon Titanium, due to its alluring high strength and durability. However, when we ran the sustainability report with both materials on the same model, we found that overall the aluminum would make for a better material for our product. Titanium did provide less air acidification, but when it came to every other category, Aluminum came out definitively on top.

The weight of aluminum was well under our target of 3 pounds, weighing in at 1.2 pounds. This, compared to titanium's 2.11 pounds, set the comparison in Aluminum's favor. When comparing the carbon footprint, Aluminum output under half of titanium's footprint, with 8.1 kg/CO_2 versus 19 kg/CO_2, respectively. In terms of total energy consumption, the aluminum performed much more environmentally friendly, with an estimated 94 MJ, just over one third of Titanium's estimated 270 MJ. Tangentially, Titanium produced much less of a recyclable composition, with an estimated 54% of the material ending up in a landfill at the end of its life, while Aluminum had just 13% or its material going to a landfill. Titanium did edge out aluminum when it came to air acidification with a total of 0.050 kg/SO_2, undercutting Aluminum's 0.055 kg/SO_2. Next, keeping a low water eutrophication saw Aluminum rise above Titanium, with Aluminum's score of .0024 kg/PO_4 beating out Titanium's .0041 kg/PO_4.

Lastly, the cost was one of the largest splits between the two materials, with an Aluminum design costing an estimated $1.20, which is almost ten times cheaper than the $11.40 it would cost to produce our product out of titanium. Weighing all of this data, we came to the definite conclusion that aluminum would make an optimal material for our product.

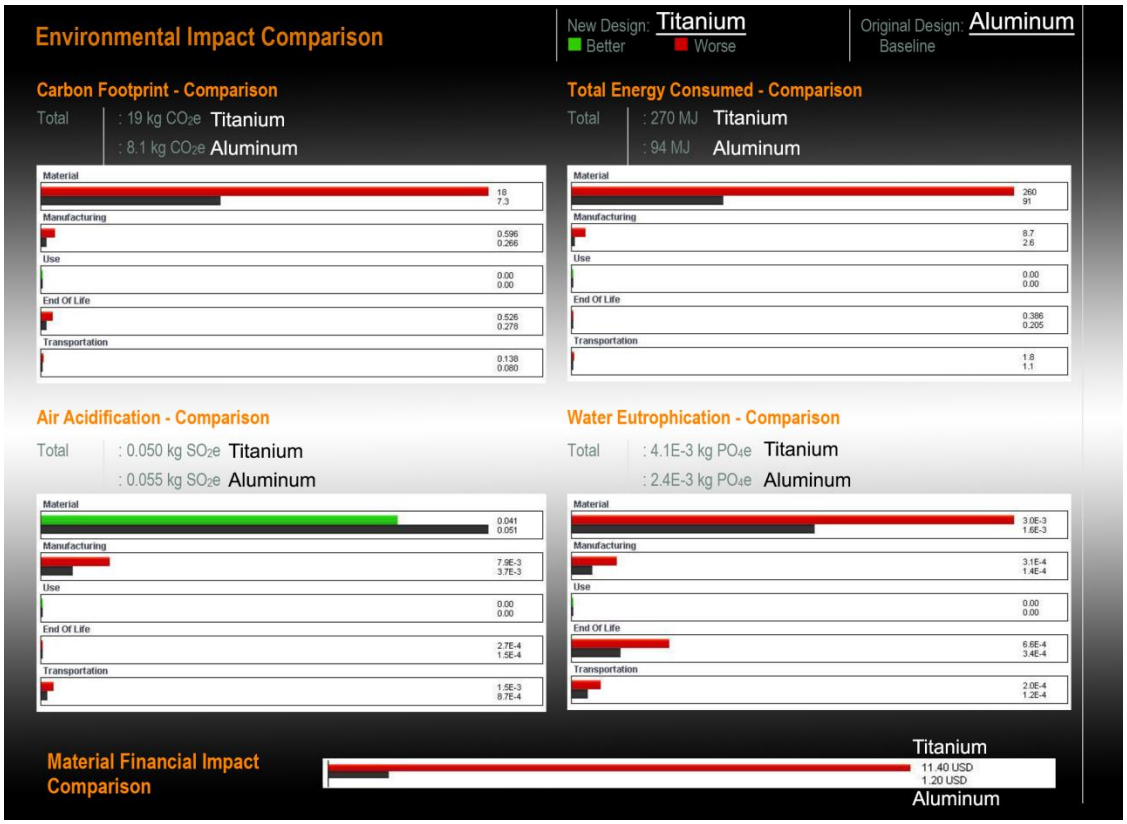

Conclusions

This project allowed our team to emulate everyday business relationships in the real world by giving us an opportunity to work with a customer to produce a product that fulfills their needs. It was also instrumental in our development as engineers and learning the design process from beginning to end, even if we couldn't put it into production. With that in mind, some possible improvements could be made. The straps that held the box together at the corners need to be attachable with thinner snap points so that the box would be able to fold down to the correct size. Another improvement would be to maybe have a lid as either part of the box or as an option for the user to decide on. Additionally, to allow the box to be attached to the bicycle, we would have to design an attachment bracket that the box can easily be detatched from. The bracket would have to come in different styles to accommodate different types of bicycles. All in all, our group felt as though this experience will benefit our development as engineers well into the future.

References

http://www.esm.psu.edu/courses/emch13d/design/design-tech/materials/aluminum_alloys.html

http://www.onlinemetals.com/aluminumguide.cfm

http://www.lexingtoncontainercompany.com/Milk-Crates-Dairy-Crates.html

http://www.bikeleague.org/content/acs-bike-commuting-continues-rise