EDSGN 100

Semi-Automatic Dumpling Maker

Submitted by:, Abdulla Al Ali, Jillian Quill, Mitchell Ernst, Jason Scott, Aidar Mussabekov

Submitted to: Xinli Wu, Ph.D., PE

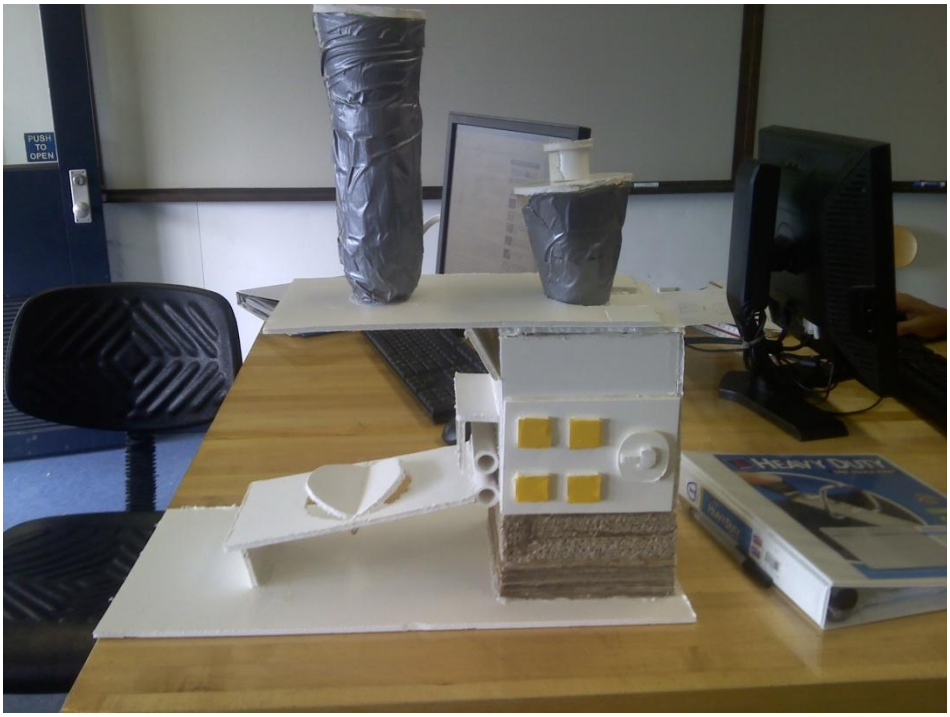

Table of Contents

Abstract ……... Jillian Quill

Introduction……...Jillian Quill

Description of Design Task ……..……..Jillian Quill, Jason Scott Mitchell Ernst,

Design Approach…….Jillian Quill, Mitchell Ernst, Jason Scott

Final Design and Prototype……..……..Mitchell Ernst, Jillian Quill, Jason Scott, Abdulla Al Ali, Aidar Mussabekov

Engineering Analysis …… Jillian Quill, Mitchell Ernst

Summary & Conclusion ……..Abdulla Al Ali

Abstract

Jillian Quill

This report documents the design project of Aidar Mussabekov, Mitchell Ernst, Jason Scott, Jillian Quill, and Abdulla Al Ali who designed and built a prototype of a dumpling maker, unlike any already on the market, based on the Customer Needs Assessment. The dumpling maker needed to be cheap, easy to use, and efficient.

Introduction

Jillian Quill

Every cook knows that making dumplings is a long, boring process; many wonder if it could be easier to get that same delicious flavor. Xinli Wu challenged his Engineering Design Classes to design and build a semi- or fully-automatic dumpling maker; the following file documents the process of one group.

Description of Design Task

Jillian Quill, Jason Scott, Mitchell Ernst

Problem Statement:

The problem was that consumer demand for dumplings necessitated the invention of a more efficient process for kitchen dumpling production. The restaurant industry desired a faster, more consistent means of making a dumpling on a commercial magnitude as compared to the traditionally tedious and inconsistent hand-made methods.

Mission Statement:

The mission of the students was to design and build a conceptual prototype of an automatic dumpling maker suitable for use in either a household or restaurant.

Design Specifications:

- The dumpling maker should be automatic or semi-automatic
- The dumpling maker should produce no less than 10 dumplings per minute on average.
- The material cost for the dumpling maker should not exceed $200 unless it can be justified.
- The dumpling maker should be safe as a food processor, easy to maintain, safe to use, and dishwasher safe.

Design Approach

Mitchell Ernst , Jillian Quill, Jason Scott

Gantt Chart

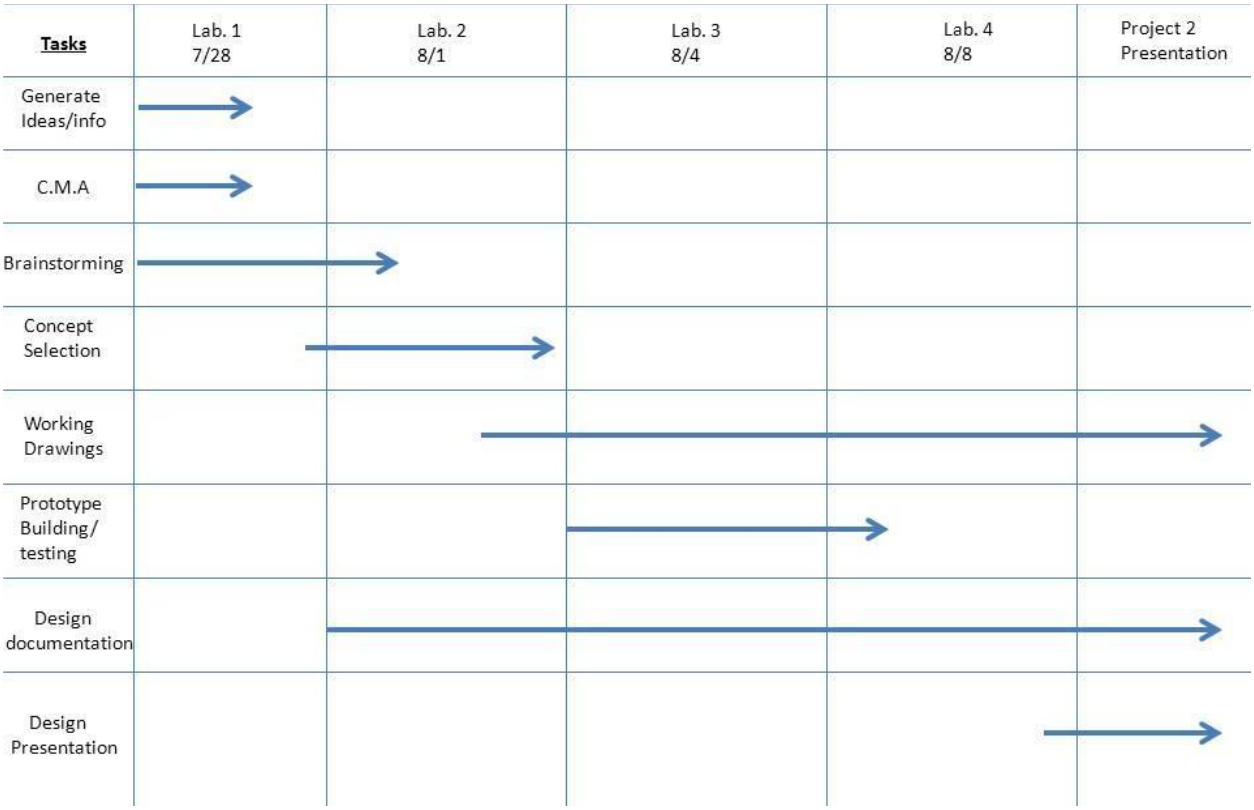

Customer Needs Assessments

After completing a telephone consultation with management from three different hometown Chinese restaurants, we have compiled the following data and recommendations.

Special thanks to the employees of Tom Wang's Chinese Restaurant of Lancaster, PA, Chinatown Restaurant of Bloomsburg, PA, and the Sang Kee Peking Duck Restaurant of Philadelphia, PA.

Employees of all three restaurants stated a stainless steel design or another easily cleaned material would be the preferred composition of the dumpling maker. In Addition, all three cited safety as a concern with emphasis on a stable and sturdy design.

Two of the three people questioned requested that the machine be durable and be easily maintained. Two-thirds also asked that the machine fit easily on a small prepping table. Two people stated reliability as a concern (this can be interpreted as a facet of durability) as well.

The following suggestions were each mentioned once: Have Easily sharpened blades (if installed), be a lightweight unit, be visually appealing, have multiple speeds, have proper texture of dough, have variable capacity options for dumpling filling, have a moderate noise level, be energy efficient.

Based on the suggestions of the prospective customers, we recommend that highest weight be given to the machine's ease of cleaning as well as its durability (encompasses stability, sturdiness, and reliability). Furthermore, assign significant weight to the size of the unit and ease of maintenance (includes blade sharpening). Moreover, during the design selection process, consider the weight (heaviness) of the device, visual appeal, texture of dumplings produced, noise created during operation, and energy efficiency. Also, consider extra features such as multiple speed selection and variable capacity options for dumpling filling.

Concept Generation

Each member of the group came to class with multiple designs, ready to share his or her ideas. Ideas like Blender, which involved a huge blender-like object, with many intricate parts small parts, acted as a one-step dumpling maker: put ingredients in the blender, out the bottom comes a dumpling. Other ideas like the Rotating belt operated without the box frame, it had multiple stations, at which a specific process would occur, from making, measuring and cutting the dough to the filling and folding.

In order to choose which idea would be the best, the group created a design matrix. After looking at their customer needs assessment, the group created a list of important qualities for the designs to be analyzed by. Once the list was created, the group rated each quality on a scale of 1-5; being rated 5 was considered very high, and being rated 1 was considered extremely poor. The two highest rated designs were then modified, and reanalyzed, this time with qualities rated on their importance. From this the group decided to choose the Modified Conveyor design idea because it scored the highest.

Design Selection Matrices:

	Blender	Rotating Belt	Conveyor	Bowl
Ease to Use	2	2	4	3
Safety	1	3	3	3
Creativity	5	1	2	2
Cost	3	1	3	3
Easy to Clean	3	3	3	1
Dumplings per min.	5	2	3	2
Size	2	3	2	2
Ease of Manufacturing	3	2	3	3
Totals	24	17	23	19

		Modified Blender	Modified Conveyor
	Weighted %		
Ease to Use	15	3	4
Safety	15	4	4
Creativity	5	4	3
Cost	5	1	2
Easy to Clean	15	2	3
Dumplings per min.	15	4	3
Size	15	2	5
Ease of Manufacturing	15	2	3
	Totals	2.8	3.55

Final Design and Prototype

Mitchell Ernst, Jillian Quill, Jason Scott, Abdulla Al Ali, Aidar Mussabekov

Prototype

The prototype type scale was 1:1.

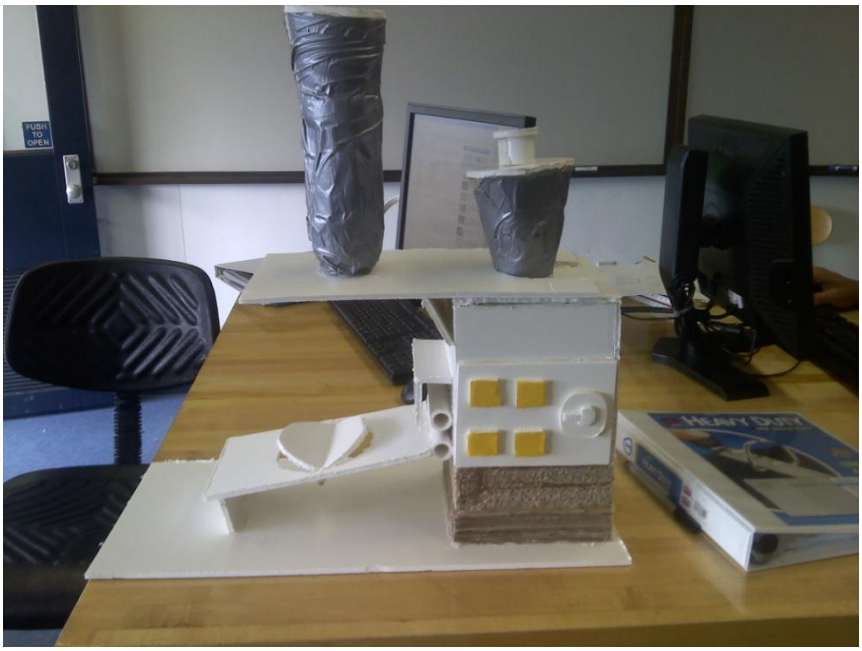

Figure 1. Horizontal View.

Figure 2. Isometric View

Working Drawings

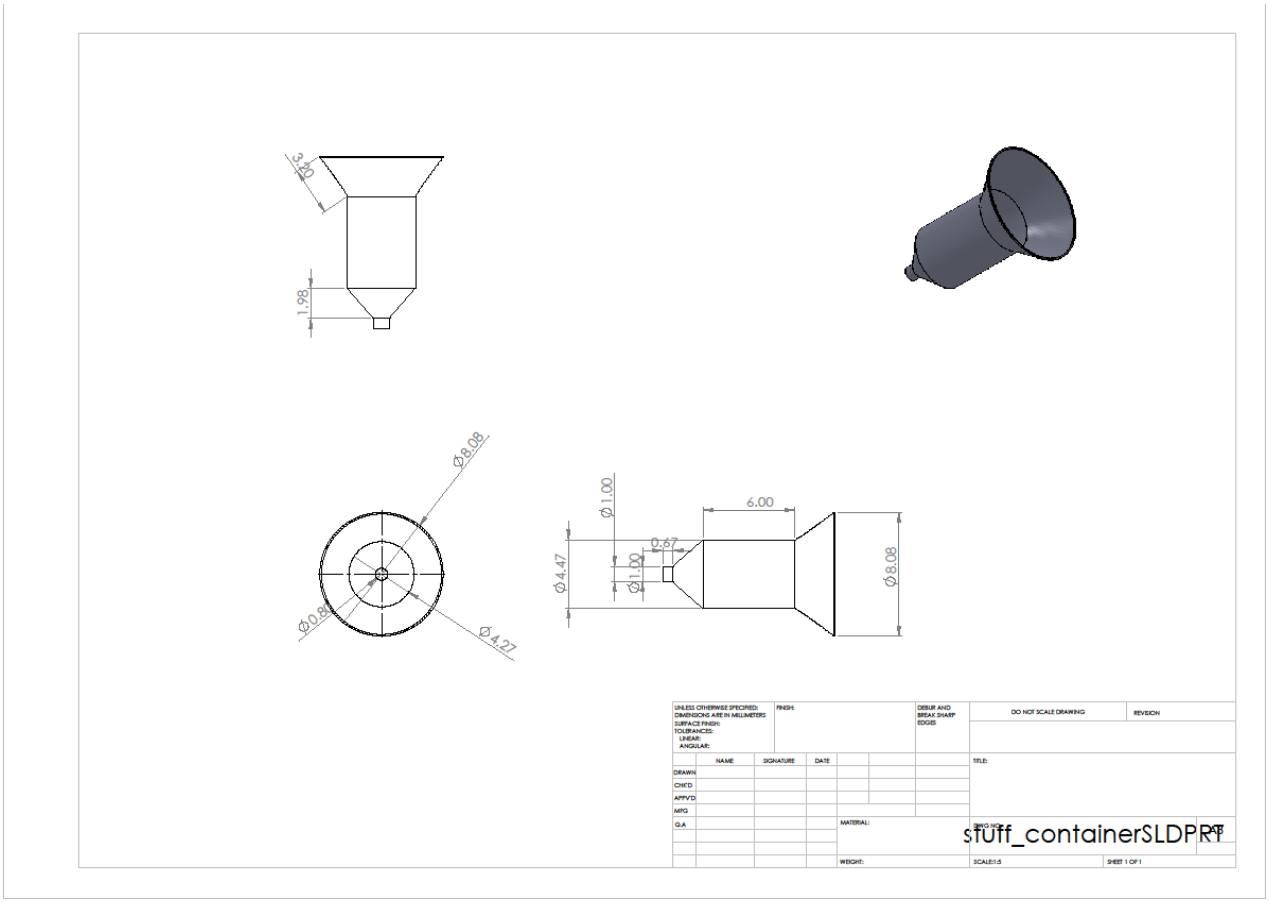

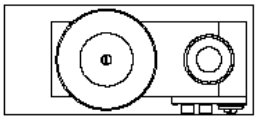

ITEM NO.	PART NUMBER	DESCRIPTION	QTY.
1	P2blenderbase	Stainless Steal	1
2	switch	Aluminum	1
3	P2blenderchute	Durable Plastic	1
4	P2blenderlid	Durable Plastic	1
5	supporter	Stainless Steel	1
6	stuff_containerSLDPRT	Durable Plastic	1
7	top_1	Stainless Steel	1
8	dumpling makers convey_part	Durable Plastic	1
9	slab	Stainless Steel	2
10	blender bladeSLDPRT	Stainless Steel	1

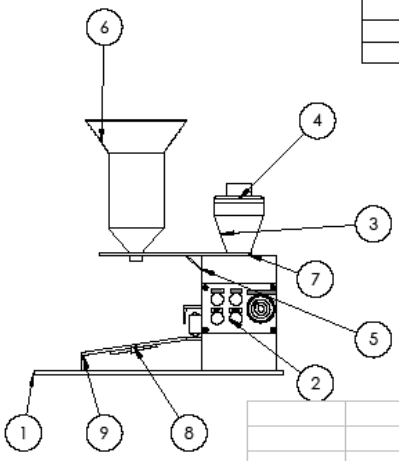

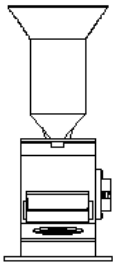

PROPRIETARY AND CONFIDENTIAL
THE INFORMATION CONTAINED IN THIS DRAWING IS THE SOLE PROPERTY OF <INSERT COMPANY NAME HERE>. ANY REPRODUCTION IN PART OR AS A WHOLE WITHOUT THE WRITTEN PERMISSION OF <INSERT COMPANY NAME HERE> IS PROHIBITED.

NEXT ASSY	USED ON
APPLICATION	

UNLESS OTHERWISE SPECIFIED:
DIMENSIONS ARE IN INCHES
TOLERANCES:
FRACTIONAL ±
ANGULAR: MACH ± BEND ±
TWO PLACE DECIMAL ±
THREE PLACE DECIMAL ±
INTERPRET GEOMETRIC TOLERANCING PER:
MATERIAL
FINISH
DO NOT SCALE DRAWING

	NAME	DATE
DRAWN		
CHECKED		
ENG APPR.		
MFG APPR.		
Q.A.		

COMMENTS:

TITLE:

SIZE | DWG. NO. | REV
A | DumpingAssy | V1

SCALE: 1:8 | WEIGHT: | SHEET 1 OF 1

5 4 3 2 1

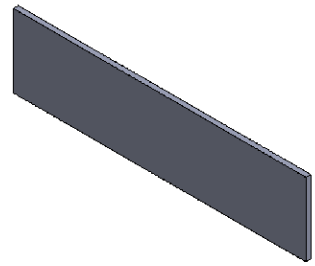

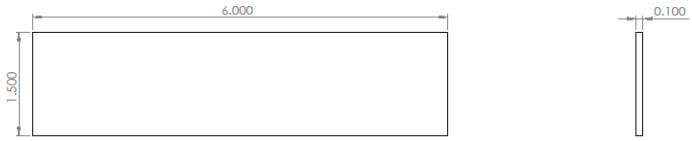

UNLESS OTHERWISE SPECIFIED:
DIMENSIONS ARE IN MILLIMETERS
SURFACE FINISH:
TOLERANCES:
LINEAR:
ANGULAR:

FINISH:

DEBUR AND BREAK SHARP EDGES

DO NOT SCALE DRAWING

REVISION

	NAME	SIGNATURE	DATE
DRAWN			
CHK'D			
APPV'D			
MFG			
Q.A			

MATERIAL:

WEIGHT:

TITLE:

DWG NO. supporter

A3

SCALE:1:1

SHEET 1 OF 1

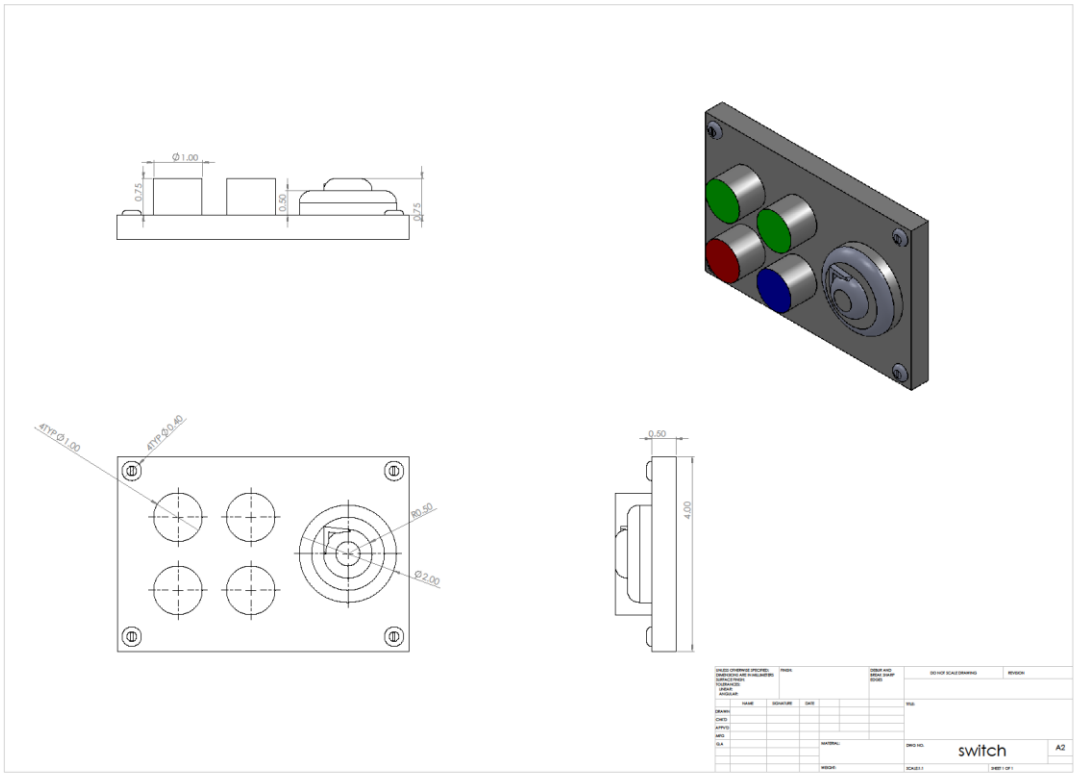
Ø1.00
0.75
0.50
0.75
4TYP Ø1.00
4TYP Ø0.40
R0.50
Ø2.00
0.50
4.00
UNLESS OTHERWISE SPECIFIED:
DIMENSIONS ARE IN MILLIMETERS
SURFACE FINISH:
TOLERANCES:
LINEAR:
ANGULAR:
FINISH:
DEBUR AND
BREAK SHARP
EDGES
DO NOT SCALE DRAWING
REVISION
NAME
SIGNATURE
DATE
DRAWN
CHK'D
APPV'D
MFG
Q.A
TITLE:
MATERIAL:
WEIGHT:
DWG NO.
switch
A2
SCALE:1:1
SHEET 1 OF 1

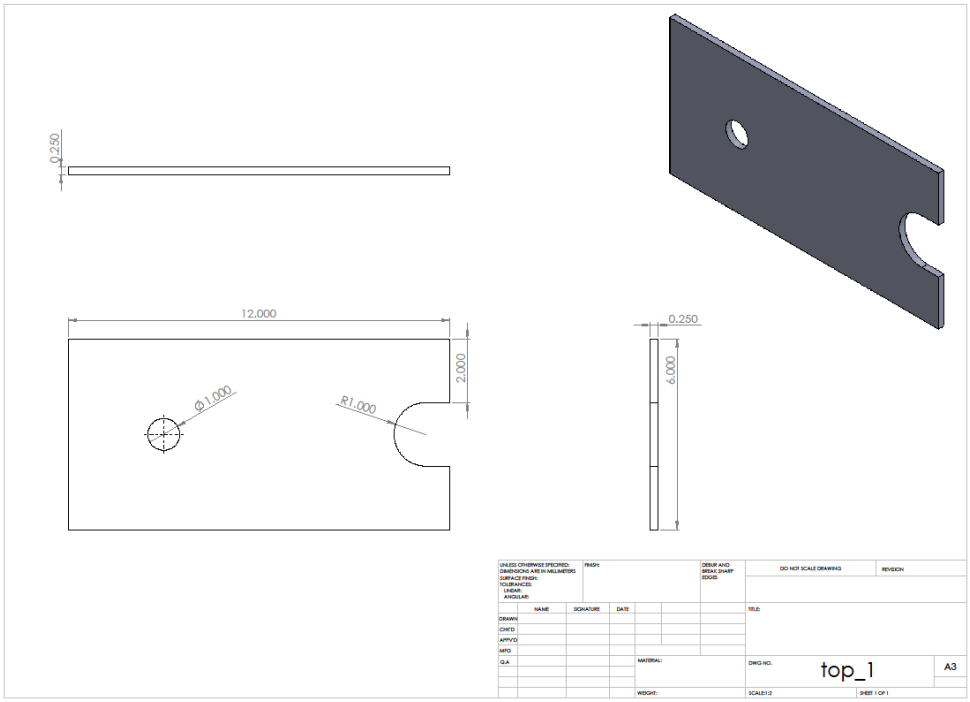
0.250
12.000
2.000
Ø1.000
R1.000
0.250
6.000
UNLESS OTHERWISE SPECIFIED:
DIMENSIONS ARE IN MILLIMETERS
SURFACE FINISH:
TOLERANCES:
LINEAR:
ANGULAR:
FINISH:
DEBUR AND
BREAK SHARP
EDGES
DO NOT SCALE DRAWING
REVISION
NAME
SIGNATURE
DATE
DRAWN
CHK'D
APPV'D
MFG
Q.A
TITLE:
MATERIAL:
WEIGHT:
DWG NO.
top_1
A3
SCALE:1:2
SHEET 1 OF 1

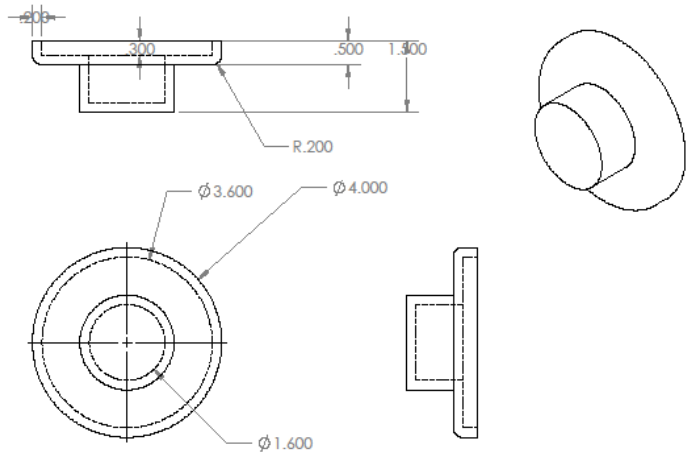

		UNLESS OTHERWISE SPECIFIED:		NAME	DATE
		DIMENSIONS ARE IN INCHES TOLERANCES: FRACTIONAL ± ANGULAR: MACH ± BEND ± TWO PLACE DECIMAL ± THREE PLACE DECIMAL ±	DRAWN		
			CHECKED		
			ENG APPR.		
			MFG APPR.		
		INTERPRET GEOMETRIC TOLERANCING PER:	Q.A.		
		MATERIAL	COMMENTS:		
NEXT ASSY	USED ON	FINISH			
APPLICATION		DO NOT SCALE DRAWING			

PROPRIETARY AND CONFIDENTIAL

THE INFORMATION CONTAINED IN THIS DRAWING IS THE SOLE PROPERTY OF <INSERT COMPANY NAME HERE>. ANY REPRODUCTION IN PART OR AS A WHOLE WITHOUT THE WRITTEN PERMISSION OF <INSERT COMPANY NAME HERE> IS PROHIBITED.

JASON SCOTT

TITLE:

BLENDER LID

SIZE	DWG. NO.	REV
A2	blenderlid.pdf	
SCALE: 1:2	WEIGHT:	SHEET 1 OF 1

5 4 3 2 1

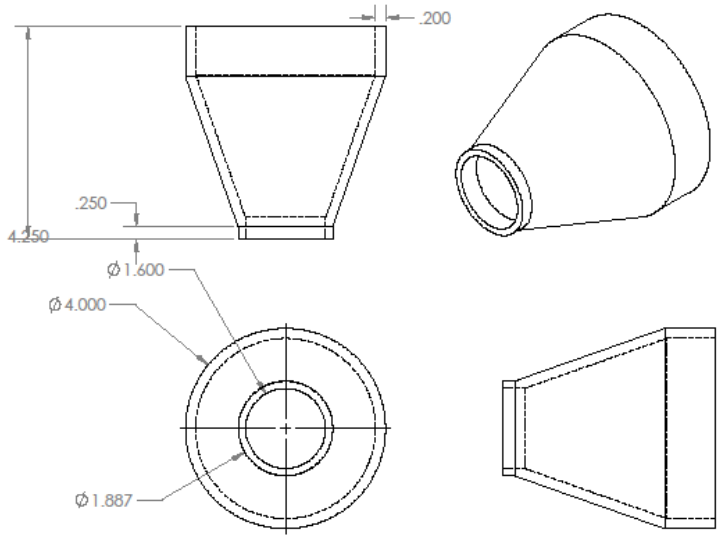

		UNLESS OTHERWISE SPECIFIED:		NAME	DATE
		DIMENSIONS ARE IN INCHES TOLERANCES: FRACTIONAL ± ANGULAR: MACH ± BEND ± TWO PLACE DECIMAL ± THREE PLACE DECIMAL ±	DRAWN		
			CHECKED		
			ENG APPR.		
			MFG APPR.		
		INTERPRET GEOMETRIC TOLERANCING PER:	Q.A.		
		MATERIAL	COMMENTS:		
NEXT ASSY	USED ON	FINISH			
APPLICATION		DO NOT SCALE DRAWING			

PROPRIETARY AND CONFIDENTIAL

THE INFORMATION CONTAINED IN THIS DRAWING IS THE SOLE PROPERTY OF <INSERT COMPANY NAME HERE>. ANY REPRODUCTION IN PART OR AS A WHOLE WITHOUT THE WRITTEN PERMISSION OF <INSERT COMPANY NAME HERE> IS PROHIBITED.

JASON SCOTT

TITLE:

BLENDER CHUTE

SIZE	DWG. NO.	REV
A	P2blenderchute.pdf	
SCALE: 1:2	WEIGHT:	SHEET 1 OF 1

5 4 3 2 1

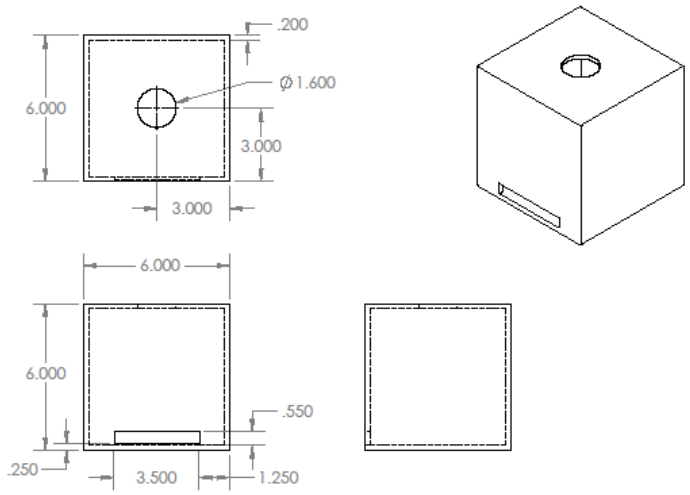

		UNLESS OTHERWISE SPECIFIED:		NAME	DATE
		DIMENSIONS ARE IN INCHES TOLERANCES: FRACTIONAL ± ANGULAR: MACH ± BEND ± TWO PLACE DECIMAL ± THREE PLACE DECIMAL ±	DRAWN		
			CHECKED		
			ENG APPR.		
			MFG APPR.		
		INTERPRET GEOMETRIC TOLERANCING PER:	Q.A.		
		MATERIAL	COMMENTS:		
NEXT ASSY	USED ON	FINISH			
APPLICATION		DO NOT SCALE DRAWING			

PROPRIETARY AND CONFIDENTIAL

THE INFORMATION CONTAINED IN THIS DRAWING IS THE SOLE PROPERTY OF <INSERT COMPANY NAME HERE>. ANY REPRODUCTION IN PART OR AS A WHOLE WITHOUT THE WRITTEN PERMISSION OF <INSERT COMPANY NAME HERE> IS PROHIBITED.

JASON SCOTT

TITLE:

BLENDER BASE

SIZE	DWG. NO.	REV
A	P2blenderbase.pdf	
SCALE: 1:4	WEIGHT:	SHEET 1 OF 1

5 4 3 2 1

Design Features

"The Magic Box" is made out of high quality stainless steel, durable plastics, and a life-time guaranteed electric motor. It can produce up to 15 dumplings per minute. "The Magic Box" has a variable speed setting switch which allows the owner to select the amount of dumplings made per minute. This wonderful piece of machinery not only produces dumplings, it also mixes the dough to the perfect consistency. The dough is then rolled out to the optimum thickness then sliced to the perfect size by a stainless steel cutting utensil. An adjustable filling proportion distributor then places the filling of your choice on the dough where it is then folded over forming a delicious dumpling.

"The magic box" is power by simply plugging it into your normal everyday electric outlet. The powerful electric motor inside the stainless steel water tight housing is completely safe to put in the dishwasher along with the rest of the devices. The entire assembly easily comes apart of easy cleaning and operation is so simply/safe a kid can do it.

Operation Instructions

1. Insert desired amount of dough mixture into dough mixer. **CAUTION: DO NOT EXCEED 2 LITRES**.
2. Insert desire amount of dumpling filling inter filling inserter. **CAUTION: DO NOT EXCEED 1 LITRE.**
3. Plug electrical cord into 110 Volt, 60 Hertz, grounded electrical outlet. **WARNING: CONSULT AN ELECTRICIAN TO ENSURE OUTLET IS GROUNDED.**
4. Press the "ON" button below "MIX". (Result: dough begins to mix inside mixer)
5. Press the "OFF" button below "MIX" and remove the mixer lid to check for desired dough consistency. (Result: dough stops mixing inside mixer)
6. Rotate "VARIABLE FILLING KNOB" to reflect desire amount of filling to be inserted into dumpling.
7. When dough reaches desired consistency, ensure "MIX" is turned "OFF" and press the "ON" button below "MAKE". (Result: dough is flattened, cut into squares, fed down the ramp, filling is inserted, and cutter/crimper cuts out the dumpling and seals it shut, then dumpling tumbles down ramp). **WARNING: TO AVOID INJURY KEEP BODY**

PARTS AWAY FROM CUTTER AND CUTTER FILLER DURING “MAKE” PROCESS.

Engineering Analysis

Jillian Quill, Mitchell Ernst

Working Mechanism

The way that this dumpling maker is designed to work is quite genius in its design. Since it is semi-automatic, it will need someone there to turn it off. This first thing that this maker does is, when the correct amount of flour and water is added to the mixer and the button is pressed, make the dough.

Since this mixer is so efficient, it can blend large amounts of dough; therefore, the minute that the dough is ready to be used, the dough is rolled out through rollers. A timed cutter is hanging above them, ready to cut the flattened dough at specific times.

Finally, the cut dough moves along the belt until it reaches the point where it had food dispensed into it. (The amount of food can be adjusted) Then immediately after the filling has been placed into dumpling, it is immediately folded and the ready to be cooked dumpling is dropped off the side of the belt into a bowl.

Cost Analysis

Small AC Gear motor …….....$40.73

12”x12” Stainless Steel Sheeting 1/16” thick…….……..$53.75

On-Off Switch……..…….....$20.00

Stuffing Pump……..……..$9.25

Dumpling Folder/Ramp…….…$12.50

Mixer Blades……..$7.45

Platform (Aluminum)……..…….……...$25.00

Total: $168.68

Summary & Conclusion

Abdulla Al Ali

After discussing the features of the best design it could be made and brainstorming and combining many different ideas from each person in the group, a final design has been chosen and made. First taking in count restaurant owners of different Chines restaurants about the Chinese dumpling and which is the best way to make a machine that could do them faster. Owner's opinion gave an idea of what a person want from a dumpling maker machine. Choosing the final design and starting a group working helped to finish on time. Dividing the job equally on each group member helped more. Also, studying the ease of use pointed to the simplicity of the design. This made the design may be used by many different ages. After dividing the work, the gathering job started. Each member has to show up his work to put it all together and finish the final touches. Creativity played a big role in making the maker looks simple and pleasant to the eye. Group members should work together every time to finish the job on time and in a perfect way. All in all creativity and participation of each member in the group lead to the success of getting the final design done.