J.C M^2 (Team Four)

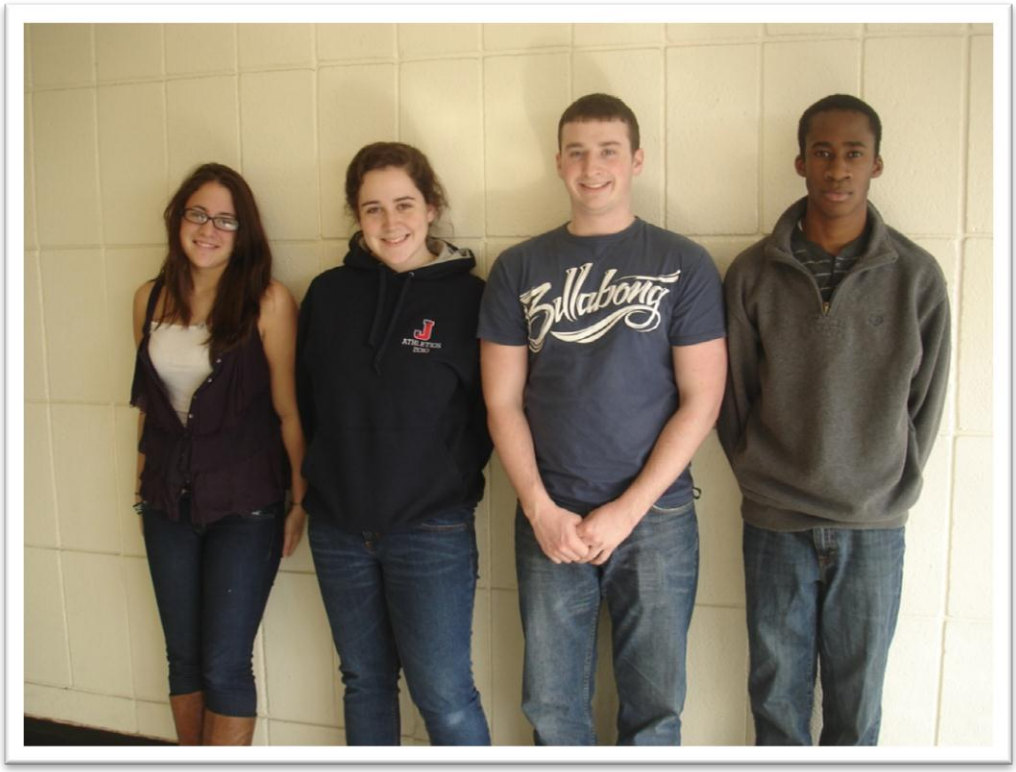

Team Four (from left to right): Melissa Reizner(Presentation Director), Jill Morris (Cost Analyzer), Mike Schocken (Final Report), Chris Thompson (Prototype Design)
EDSGN100, Section 019, Spring 2011
Instructor: Liz Kisenwether
Product: The Chable

1. Problem statement:

Our Product-The Chable-incorporates a table and chair, I can easily collapse to fit under the bed basically solving all your problems. Our goal for this design was to create a simple, cheap chair that could also store items, perfect for any dorm or first apartment. The Chable will be just made out of cardboard and glue.

2. **Concept development**

Design Process	Results
1. **Survey target customers** a. **What kind of furniture do you need in your room?** b. **What price would you pay?** c. **What would you pick: storage or seating?**	College Students wanted space and multi-functionality. They wanted something cheap but durable. They picked storage and seating.
2. **Pick furniture type**	Chair
3. **Collect ideas for key features and design a matrices determining the reasonability of each design feature**	-assemble/disassemble -holds 160+ pounds -stability -storage -chair back, that can come off but can support the back The matrices helped us narrow our design outcome to a design that was reasonable and met the most goals
4. **Sketch the object**	See images below

3. **Testing:**

Our team was assigned he task of building a 16 inch triangle base. Our results were better then we expected. WE learned that the shorter the distance the greater amount of load the cardboard could stand. Because of these results we choose to make our base a double-sided square.

4. **Final design (See sketch on final page)**

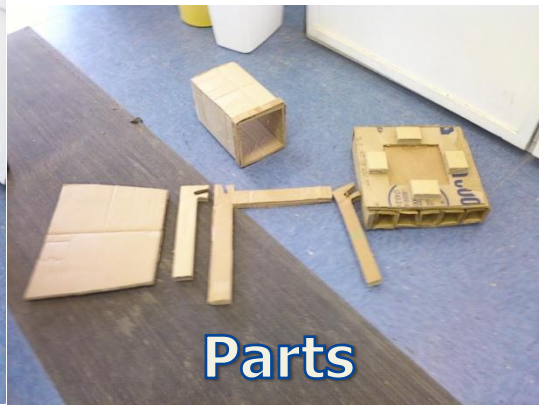

Our final design of the Chable has storage, arm rests, back support, and multi-functionality. It can transform into a chair or table depending on your need for it.

The final cost for the Chable is $67.04. (See Costing Chart)

Costing Chart

Part Name	Quantity	dimensions (in^2)	Surface Area of 1 layer (ft^2)	Layers	Total Surface Area (ft^2)	Cost of Cardboard ($)	Cost to Glue ($)
Base	1	24x24	4	2	8	0.8	2.79
Seat Bottom	1	16x12	1.33	5	6.65	0.665	2.319188
Seat Top	1	16x12	1.33	1	1.33	0.133	0.463838
Seat Front	1	16x4	0.444	1	0.444	0.0444	0.154845
Back	1	18x24	3	4	12	1.2	4.185
Short Back Support	2	6x12	0.5	3	3	0.3	1.04625
Long Back Support	1	12x26	2.17	4	8.68	0.868	3.02715
Seat Rolls	8	8x12	0.667	1	5.336	0.5336	1.86093
Hours Spent (hr)	1.5						
Total Surface Area (ft^2):			45.44				

***Hours used are for a factory setting with laser cutters and stencils.**

Cost A	Cost B	Cost C	Cost D	**Cost E**
$4.54	$15.85	$24.30	$44.69	$67.04

5. Lessons learned:

Our major problem with our half-scale prototype is the back support for the chable. If we had another four weeks to design the chable, we would add supports from the top of the back to the bottom of the chair. In addition, the base support made the chair wobbly and unstable. If we made the chair again we would look at ways to cut down the labor time and cost. We could look at ways to cut the cardboard all at once, using simple shapes and multifunctional shapes. Other than that, we have a strong base support and would make a good stool.

First Design

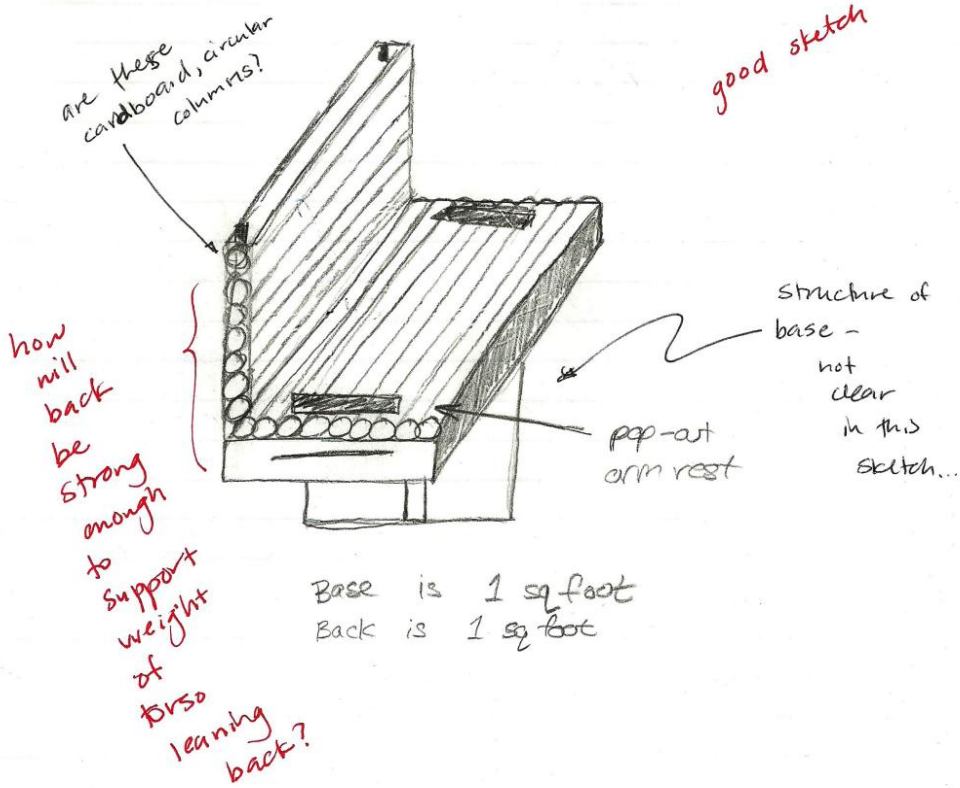

Cardboard Furniture Full-Scale Project

Front

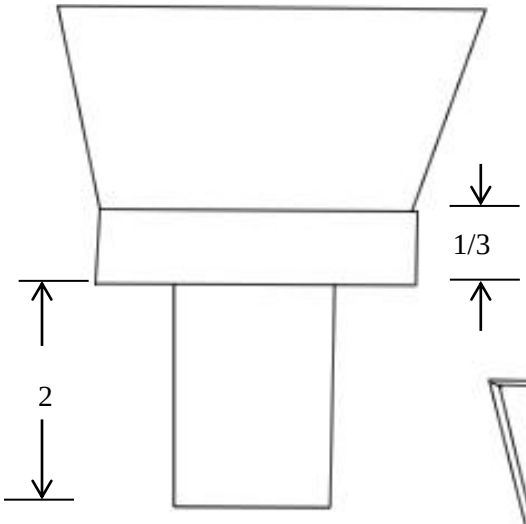

Back

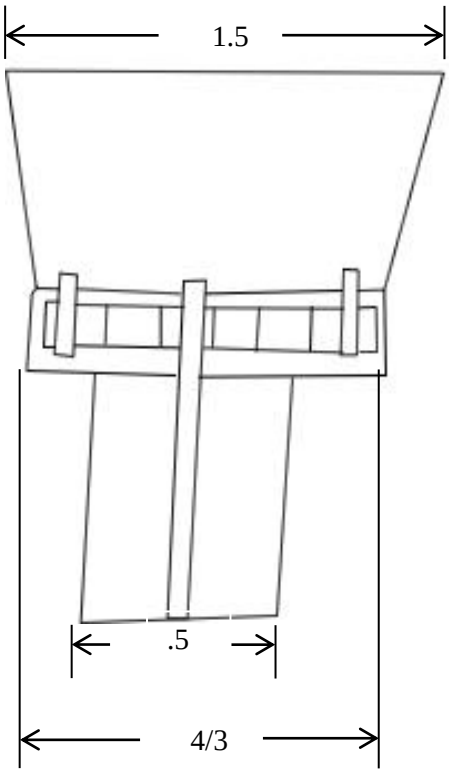

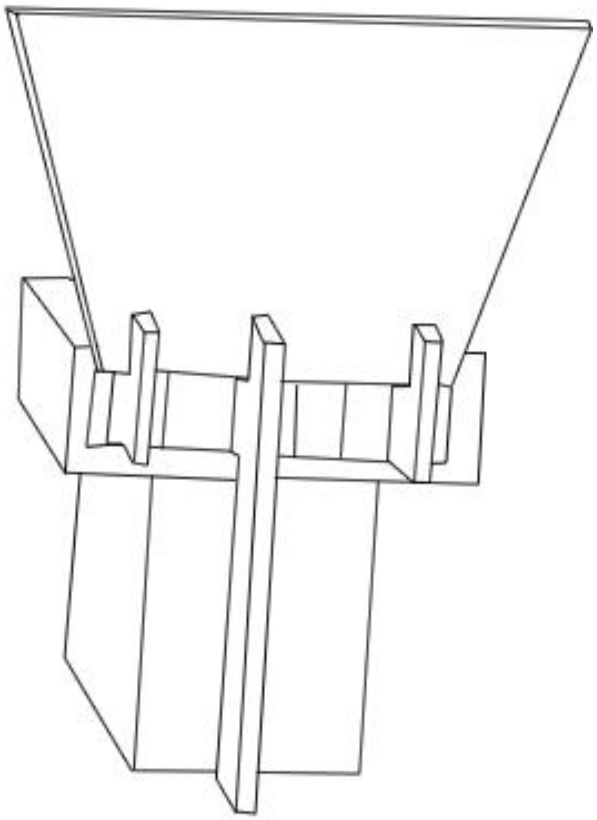

All Dimensions in feet

Total Surface Area: 45.44 ft^2
Cost to build Full Scale: $67.04