Lockheed Martin

Additive Manufacturing

Introduction to Engineering Design
EDGSN 100 Section 002
4 Girls 1 Guy / Team 8
Rebekah Moshier, http://www.personal.psu.edu/rmm5831/ , rmm5831@psu.edu
Julia Minakowski, http://www.personal.psu.edu/jfm5501/ , jfm5501@psu.edu
Dylan Weyers http://www.personal.psu.edu/djw5588/ , djw5588@psu.edu
Hyeonji Oh http://www.personal.psu.edu/ hbo5017/ , hbo5017@psu.edu
Indira Saifuddin, http://www.personal.psu.edu/iqs5115/ , iqs5115@psu.edu

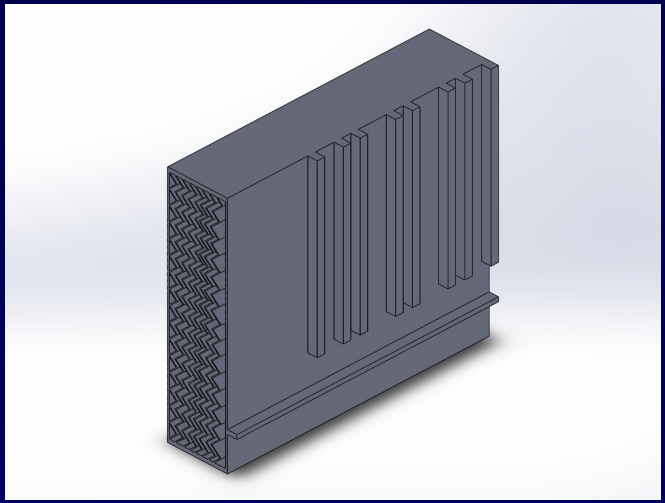

Ramen Noodle Heat Exchanger

Presented to: Prof. Berezniak

Date: 04/27/2016

Purpose

- The purpose of this project was to redesign a traditionally manufactured air-flow through heat exchanger for additive manufacturing (AM)
- Air-flow through heat exchangers utilize metals with favorable heat transfer coefficients and thin-fin structures to remove heat from circuit card assemblies (CCA)
- Typically built using a combination of CNC milling and brazing
  - Methods can be expensive and time consuming
- Redesign the heat exchanger to cut the lead time to several weeks

Background

- Heat exchangers are used to remove heat and safe-guard components
- Changed the inside design of the exchanger by arranging the slats in a vertical zig zag pattern
- Also looked at the material the heat conductor was made from
  - Changed the material to the metal with the highest thermal conductivity

Material	Thermal Conductivity (W/m^oC)
Admiralty (71 Cu - 28 Zn - 1 Sn)	111
Aluminum	202
Aluminum brass (76 Cu - 22 Zn - 2 Al)	100
Brass (70 Cu - 30 Zn)	99
Carbon Steel	45
Carbon-moly (0.5 Mo)	43
Chrome-moly steel (1 Cr - 0.5 Mo)	42
Chrome-moly steel (2 1/4 Cr - 0.5 Mo)	38
Chrome-moly steel (5 Cr - 0.5 Mo)	35
Chrome-moly steel (12 Cr - 1 Mo)	28
Copper	386
Cupro-nickel (90 Cu - 10 Ni)	71
Cupro-nickel (70 Cu - 30 Ni)	29
Inconel	19
Lead	35
Monel (67 Ni - 30 Cu - 1.4 Fe)	26
Nickel	62
Red Brass (85 Cu - 15 Zn)	159
Stainless Steel, type 316 (17 Cr - 12 Ni - 2 Mo)	16
Stainless Steel, type 304 (18 Cr - 8 Ni)	16
Titanium	19

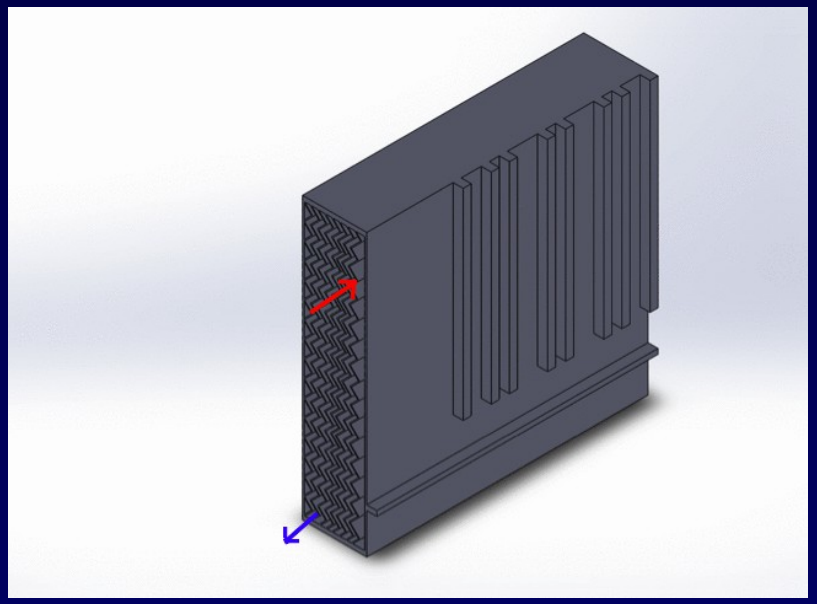

Sponsor

- Headquartered in Bethesda, Maryland
  - 500 US facilities
  - Operates in 70 countries worldwide
- Employs approximately 115,000 people worldwide
  - 60,000 engineers and scientists
- Space systems, aeronautics, missile systems and training, missiles and fire control
- Research, design, development, manufacture, integration and sustainment of advanced technology systems, products and services

LOCKHEED MARTIN

Project Description

- Heat exchanger was picked because of the role in plays in our daily lives
- Heat exchangers are used on computers to remove heat
- Without the heat exchanger, the computers could be easily ruined
- Designed a heat exchanger using solid works then had it printed in the 3D printing labs of Penn State
- Also had to choose a proper AM process and material for the exchanger
- Tried to achieve a heat designer that would better disperse heat and create a shorter build time

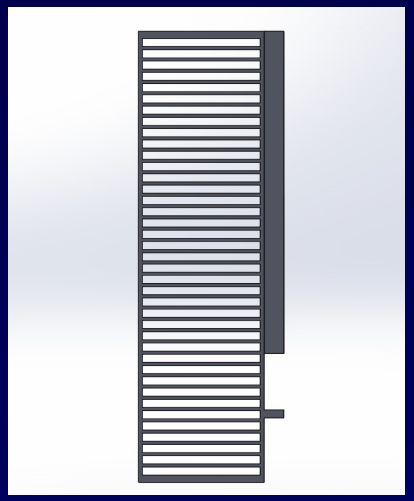

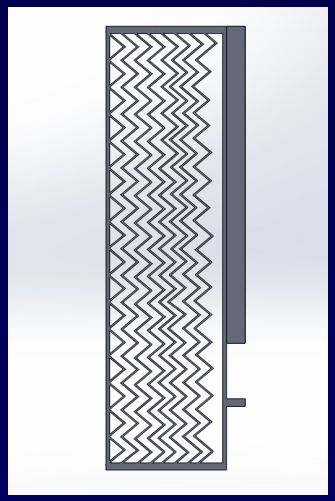

Original vs New Design

Procedures (1 of 2)

- **Heat exchanger was modified in three ways**
  - The inside design was changed
  - The material of the heat exchanger was changed
  - The thickness of the inside parts were decreased
- **The inside slats were changed from horizontal to vertical**
  - The slats were also changed from a straight line into a zig zag pattern
  - Allows more heat to dissipate at a faster rate preventing the components from overheating

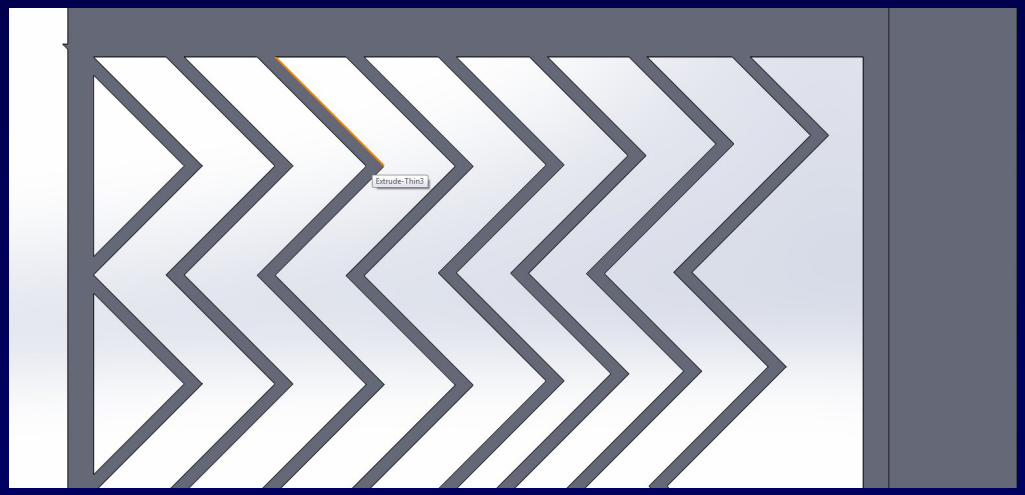

Procedures (2 of 2)

- **The material was changed to copper**
  - Copper has a high thermal conductivity of 386 W/m ˚C
  - Relatively low price of $2.28 per pound
  - About $.006 per 1 unit of thermal conductivity
  - Copper allows heat to pass through it quickly
  - Also conducts heat quickly and distributes it evenly
- **Thickness of the slats was changed from .1 in to .025 inches**
  - Smaller thickness results in less material and a lower price

Results and Discussion

- **Heat exchanger was designed to model after the small intestines**
  - Increased surface area allows more nutrients to be absorbed
  - Increasing the area allows more energy to be dissipated
- **According to noted thermodynamic researchers, Sang-Moon Lee and Kwang-Yong Kim**
  - "…shape optimization of zigzag flow channels in a PCHE has been performed to enhance heat transfer performance and reduce the friction loss based on three-dimensional Reynolds-averaged Navier–Stokes analysis with the Shear Stress Transport Turbulence model"
- **Overall, this new design allows air to flow more efficiently and effectively**

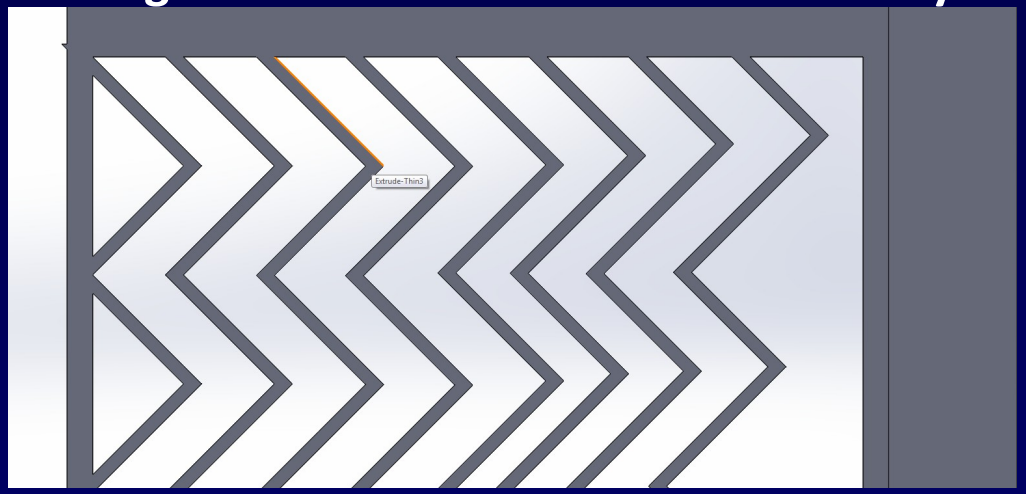

Conclusions and Recommendations

- **The vertical zig zag design would create a more efficient heat exchanger than the original**
  - The design allows air to travel more effectively through the exchanger
- **While the zig zag design was a good start, a few alterations could be added to improve the design**
- **The zig zags could have been made horizontal**
  - Heat would travel a shorter distance, thus creating a more efficient heat exchanger

Closing

Acknowledgements

Team 8 would like to thank Lockheed Martin for the amazing opportunity. Team 8 would also like to thank Professor Berezniak for all the help on this project. Finally, Team 8 would like to thank Logan Fries and Matt Schoffelemer for their assistance on the project.

This project is dedicated to Oliver; he dropped this class before we got to meet him, but we're sure he would have been a great addition to the group.