PennState College of Engineering | ENGINEERING DESIGN, TECHNOLOGY, AND PROFESSIONAL PROGRAMS

Technical Memorandum
No. EDSGN100.00#

Date: April 29th, 2016

To: Lockheed Martin Corporation

From: EDSGN100 Section 002
4 Girls 1 Guy
Rebekah Moshier
Dylan Weyers
Julia Minakowski
Indira Saifuddin
Hyeonji Oh

Subject: Penn State University
EDSGN 100: Introduction to Engineering Design
Client-Driven Design Project, Spring 2016

Purpose. The purpose of this Memorandum is to redesign a traditionally manufactured air-flow through heat exchanger for additive manufacturing (AM). Air-flow through heat exchangers utilize metals with favorable heat transfer coefficients and thin-fin structures to remove heat from circuit card assemblies (CCA). These exchangers are typically built using a combination of CNC milling and brazing. These production methods can create long lead-times and extra cost. Redesigning an exchanger for additive manufacturing would decrease the lead time from multiple months to several weeks.

Background. Heat exchangers are used to remove heat and safe-guard components. These heat exchangers can be expensive to produce using traditional manufacturing methods. Lockheed Martin designs and builds many computer assemblies. These computers utilize circuit card assemblies that consist of various electrical components that can get very hot when in use. In this project, the heat exchanger will be modified to make it more efficient by increasing its surface area and changing the material. The surface area is increased by modifying plate patterns from straight, horizontal lines plate patterns to a zigzag plate patterns. The best additive manufacturing is sheet lamination as the heat exchanger is made up of thin layer of metal sheets. Sheet lamination processes include ultrasonic additive manufacturing (UAM) and laminated object manufacturing (LOM). The Ultrasonic Additive Manufacturing process uses sheets or ribbons of metal, which are bound together using ultrasonic welding. The material of heat exchanger is changed to the material that has the highest thermal conductivity but relatively low cost.

Sponsor. Headquartered in Bethesda, Maryland, Lockheed Martin is a global security and aerospace company that - with the addition of Sikorsky - employs approximately 126,000

people worldwide and is principally engaged in the research, design, development, manufacture, integration and sustainment of advanced technology systems, products and services.

Project Description Project #1, the additionally manufactured heat exchanger, was chosen because computers play a huge role in our daily lives. Without an efficient heat exchanger, the computers might get ruined and it would affect a lot of things. Redesigning an exchanger for additive would decrease the lead time from multiple months to several weeks as well. Our design team picked this option because it was of interest to all of us and seemed like it would be a good challenge for us. For this project, we picked the heat exchanger and, using the 3D printing capabilities of Penn State, we had to design, build, and test our solution for a new heat exchanger. We then had to choose a proper AM process and material for the exchanger. Cost and build time need to be taken into account, the overall size factor has to remain as is, CCA mating features must remain as is, and the surface area has to remain constant.

Procedures. The heat exchanger is modified in two ways; increasing the surface area and changing the material. First, The surface area is increased by modifying the plate pattern from horizontal line to zigzag. Also, the thickness for the plate is decreased to 0.025 inches. The increase in surface area allows more heat to dissipate faster preventing the computer components to overheat. Figure 1 shows a close up picture of the patterns and the size of the modifications. The material for the plates is changed to copper since it has relatively higher thermal conductivity compared to other materials. Table 1 shows the thermal conductivity for various metals. Copper is chosen because with a high thermal conductivity, copper allows heat to pass through it quickly. Copper also conducts heat quickly and distributes it evenly. All modification is all done through solidworks. The original heat exchanger is provided in FIgure 2. Figure 3 shows the isometric view of the heat exchanger. The modification of the heat exchanger is provided in Figure 4 and the isometric view is provided in Figure 5. Figure 6 shows the airflow of the heat exchanger. It is a conceptual diagram of a plate and frame heat exchanger.

Results and Discussion. Team 8's heat exchanger took cues from arguably one of the most powerful machines in the world: the human body. In the body, the small intestine has a very high surface area in order to absorb the most nutrients possible for greatest efficiency. This concept was shared to the team by Dr. Jennelle Malkos, a distinguished Physiology of the Human Body lecturer at the Pennsylvania State University. Team 8 saw this connection and decided to apply the concept to improve the heat exchanger's original design. By increasing the area for the heat to travel through, more energy should be dissipated. The material selected for the production of this model would realistically be copper due to the low cost of metal and great heat conductivity properties as shown in Table 1. For the design, all external dimensions remained the same in order to maintain the proper ratio for the mounting and use of the part. However, the design team removed all internal slats and replaced them with a unique geometry of a vertical zig-zag pattern. We not only changed the geometry of the slits, we

changed the slits thickness from 0.1in to 0.025 in, which is shown in figure one. Accredited thermodynamics researchers, Sang-Moon Lee and Kwang-Yong Kim, noted in their recent findings, "In this study, shape optimization of zigzag flow channels in a PCHE has been performed to enhance heat transfer performance and reduce the friction loss based on three-dimensional Reynolds-averaged Navier–Stokes analysis with the Shear Stress Transport Turbulence model" ("Optimization of Zigzag Flow Channels…"). These zig-zag patterns not only allow air to flow more effectively and efficiently; they also allows more air to flow through the exchanger over time, making this design more advantageous to the original design. In conclusion, this redesigned model of the heat exchanger is a better model in many ways. It allows more air to flow through the exchanger overtime, making it more efficient and effective. The zig-zag patterns are better than the original horizontal patterns because they account for friction loss and its unique design enhances the exchangers heat transfer performance.

Conclusions and Recommendations. The purpose of redesigning this heat exchanger was to create a better model for the original heat exchanger. The idea of changing the internal geometry of heat exchanger by using a vertical zig-zag pattern was chosen to dissipate more heat than the original. Additionally, the metal that made up the heat exchanger was changed to copper, which has a very high thermal conductivity and a relatively low cost of around $2.28 per pound. To improve upon this design, the zig-zag pattern could be done horizontally instead of vertically. By doing this, the heat would have to travel a shorter distance, thus making the heat exchanger more efficient.

Engineering Design Group 8, 4 Girls 1 Guy, would like to thank Lockheed Martin for the opportunity to work with such a prestigious company that is on the forefront of engineering. For further information regarding this project or future projects, please contact Rebekah Moshier at rmm5831@psu.edu.

References. "Thermal Conductivities of Heat Exchanger Materials." Thermal Conductivities of Heat Exchanger Materials. N.p., n.d. Web. 25 Apr. 2016.

"Patent WO2009024801A1 - High Thermal Performance Packaging for Optoelectronics Devices." Google Books. N.p., n.d. Web. 22 Apr. 2016.

"Daily Copper Prices | Daily Charts | 1Pricing." Daily Copper Prices | Daily Charts | 1Pricing. Web. 25 Apr. 2016.

Lockheed Martin Corporation. Statement of Work. 2016

Lockheed Martin Corporation Presentation. 14 March 2016.

"Optimization of Zigzag Flow Channels of a Printed Circuit Heat Exchanger for Nuclear Power Plant Application." Taylor & Francis. N.p., n.d. Web. 25 Apr. 2016.

Attachments. Table No. 1 and Figure Nos. 1, 2, 3, 4, 5, and 6 are attached.

*****

TABLE 1

THERMAL CONDUCTIVITY OF MATERIALS

Material	Thermal Conductivity (W/m^oC)
Admiralty (71 Cu - 28 Zn - 1 Sn)	111
Aluminum	202
Aluminum brass (76 Cu - 22 Zn - 2 Al)	100
Brass (70 Cu - 30 Zn)	99
Carbon Steel	45
Carbon-moly (0.5 Mo)	43
Chrome-moly steel (1 Cr - 0.5 Mo)	42
Chrome-moly steel (2 1/4 Cr - 0.5 Mo)	38
Chrome-moly steel (5 Cr - 0.5 Mo)	35
Chrome-moly steel (12 Cr - 1 Mo)	28
Copper	386
Cupro-nickel (90 Cu - 10 Ni)	71
Cupro-nickel (70 Cu - 30 Ni)	29
Inconel	19
Lead	35
Monel (67 Ni - 30 Cu - 1.4 Fe)	26
Nickel	62
Red Brass (85 Cu - 15 Zn)	159
Stainless Steel, type 316 (17 Cr - 12 Ni - 2 Mo)	16
Stainless Steel, type 304 (18 Cr - 8 Ni)	16
Titanium	19

Figure 1. Plate Pattern and Size (.025 in.)

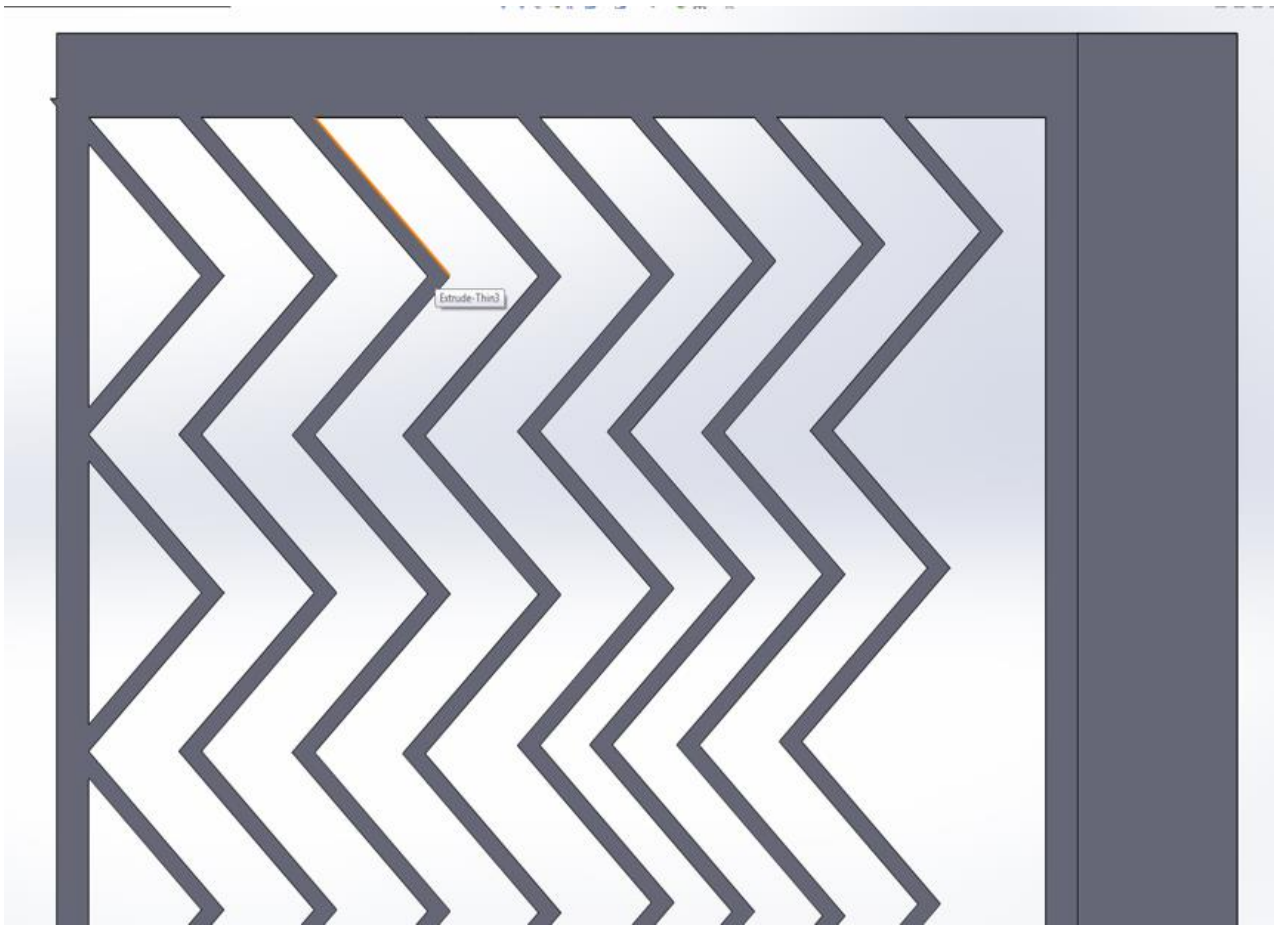

Figure 2. Original Heat Exchanger

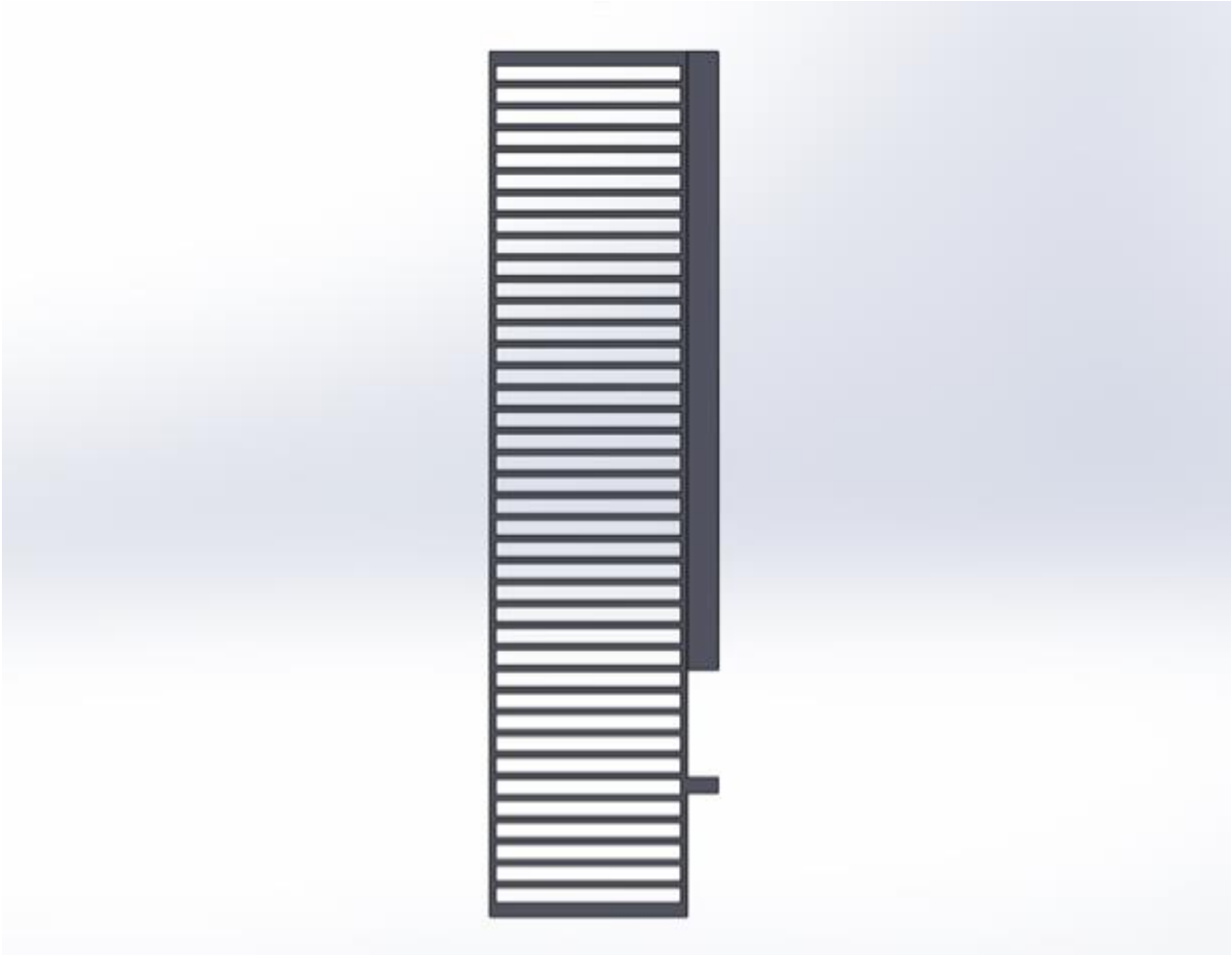

Figure 3. Isometric View of Original Heat Exchanger

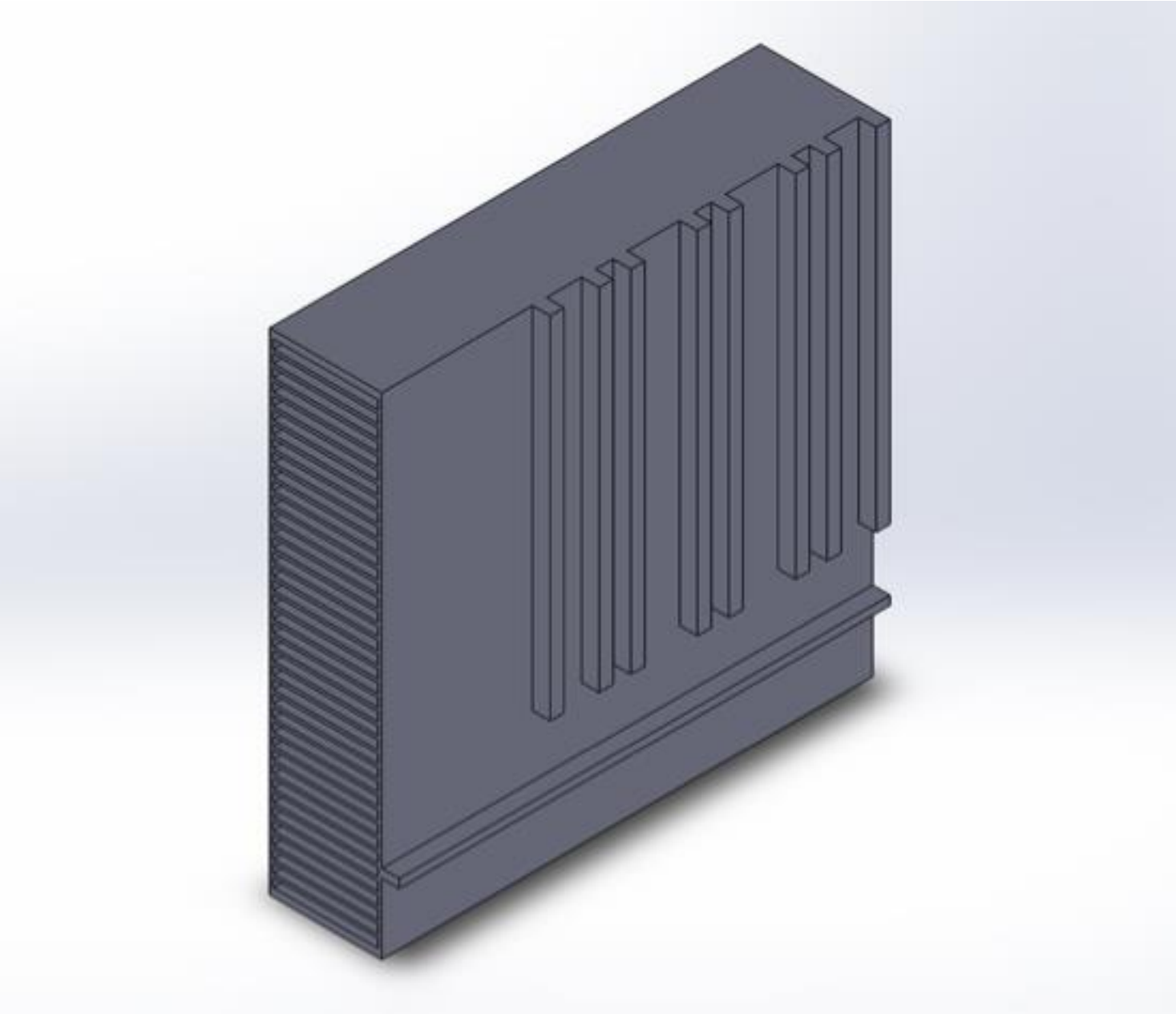

Figure 4. Modified Heat Exchanger

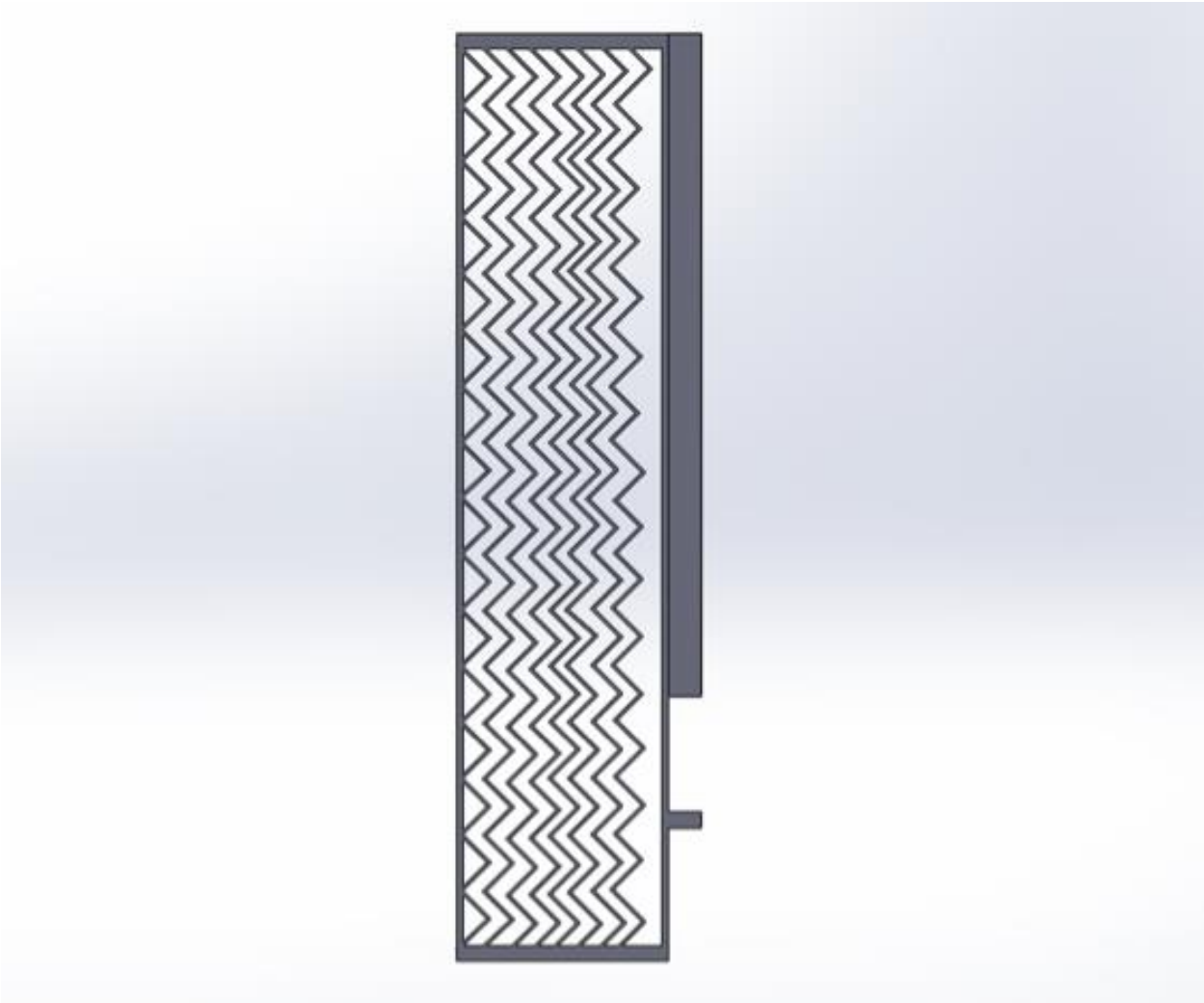

Figure 5. Isometric View of Modified Heat Exchanger

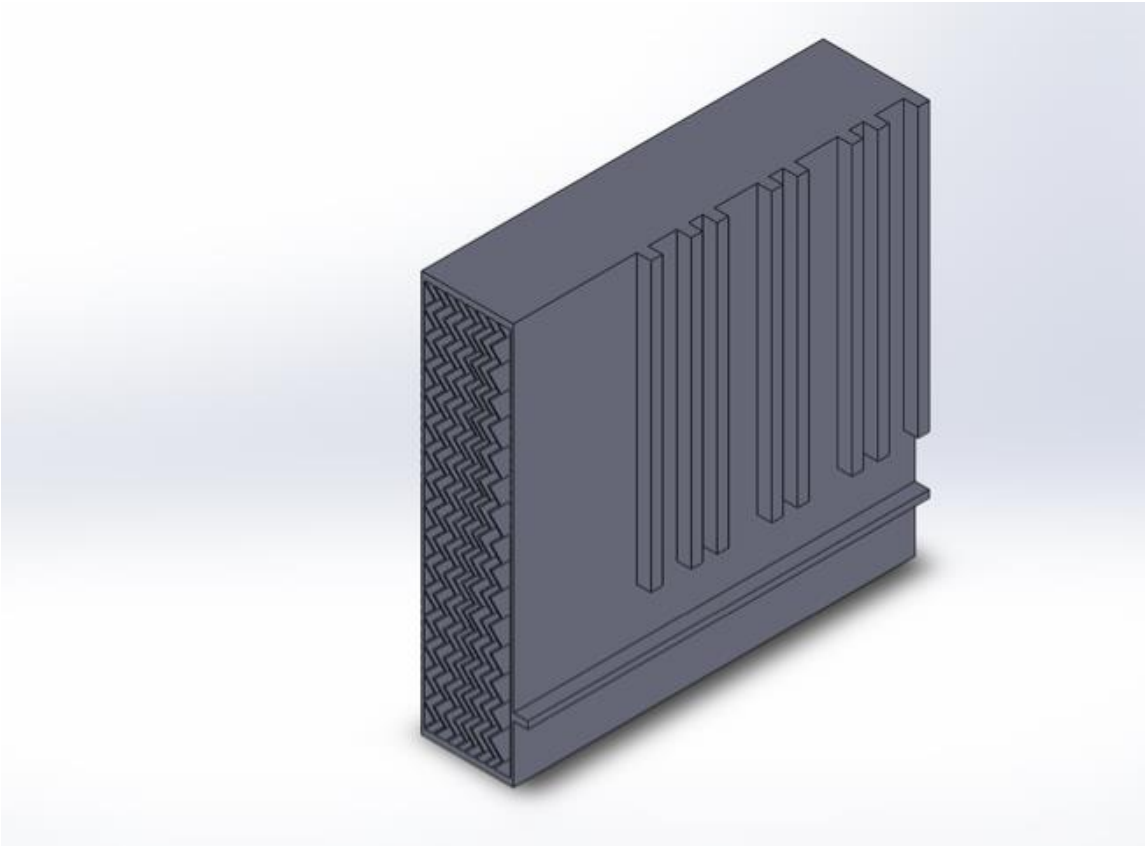
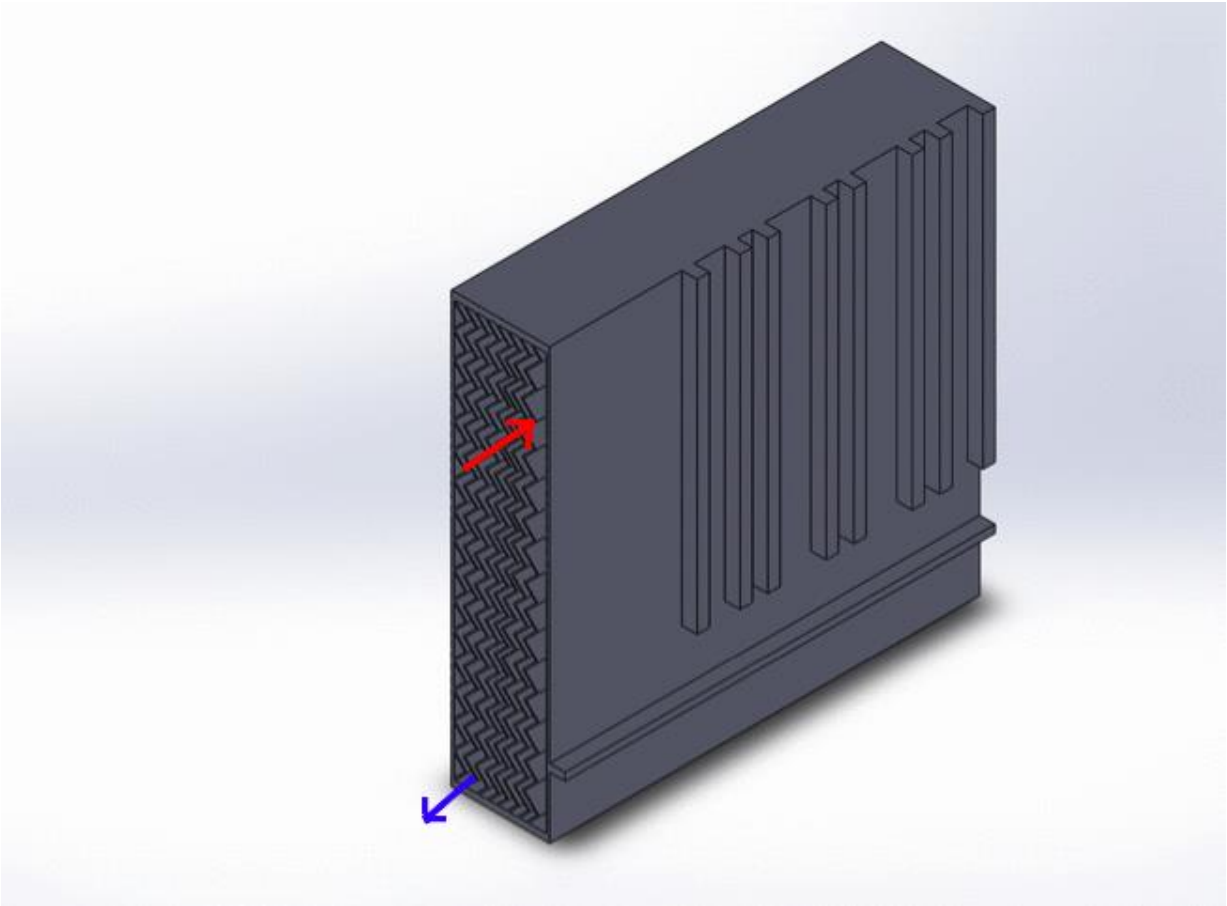
Figure 6. Conceptual diagram of a plate and frame heat exchanger