Harshal Agarkar

EDSGN 100 005

Personal CAD Project: V6-Engine

The inspiration for my personal CAD project was that V6 engine is related to my major mechanical engineering as well as it is passion to become automobile engineer. I made crank shaft, piston, engine block, oil panel and bushing; of V-6 engine. I found the dimension of V-6 engine from ford mustang. It required me to use all my skills of AutoCAD as well as solid works which I learnt throughout the semester.

There are basically two types of V-6 engine; a 120 degree and a 60 degree. This engine is a 6L V-6 engine. A typical V-6 has six cylinders, which are aligned in two rows of three cylinders. They are connected to one crank shaft which converts linear motion of pistons to rotational motion. The most difficult part for me to make was to make the crank shaft. Crank shaft had 120 degree of angle between each other.

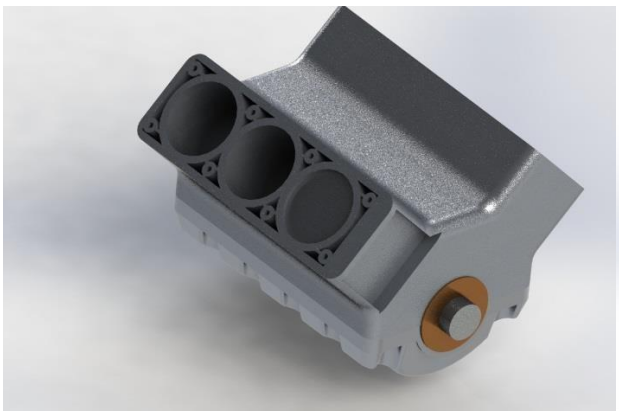

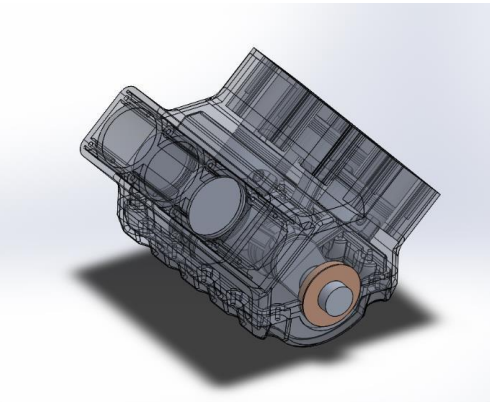

The engine was too big so it is impossible to see the dimension, but the engine is 20x20.15x15.08 (inches).

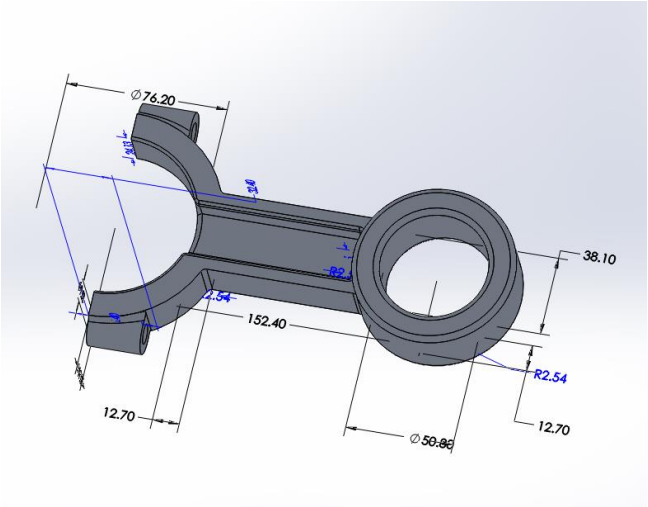

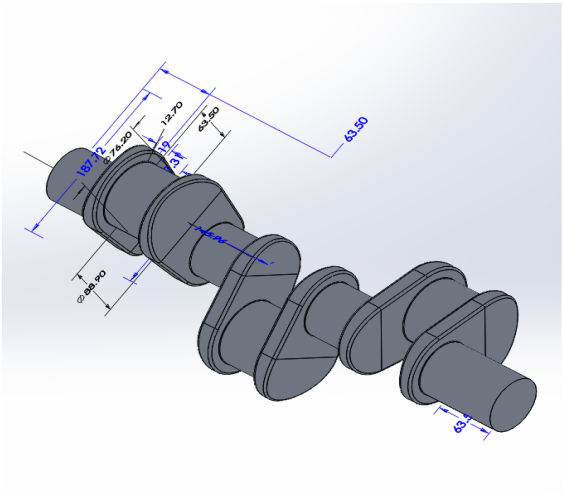

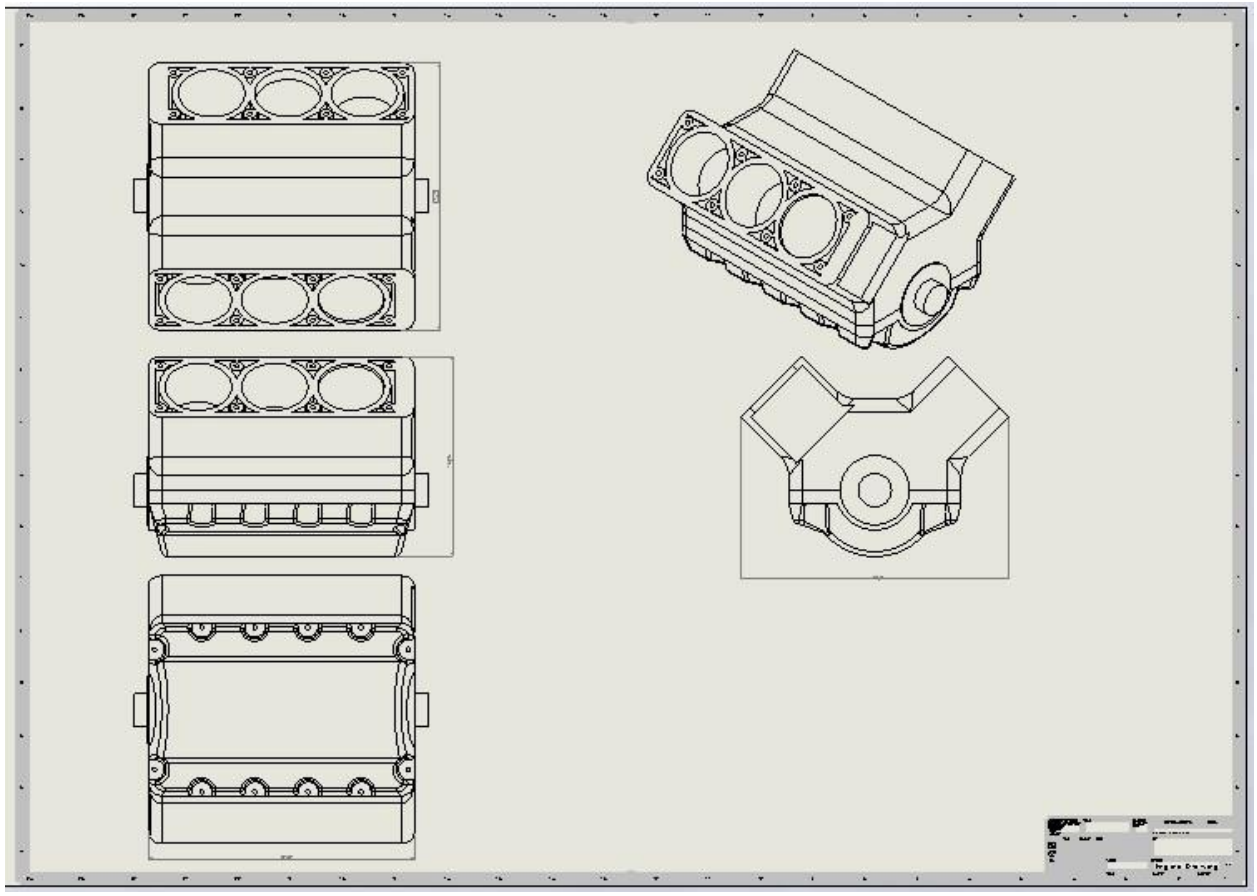

References

https://www.youtube.com/watch?v=YMoDcKXiKME