Go Cart Project

By Haralambos Zografos

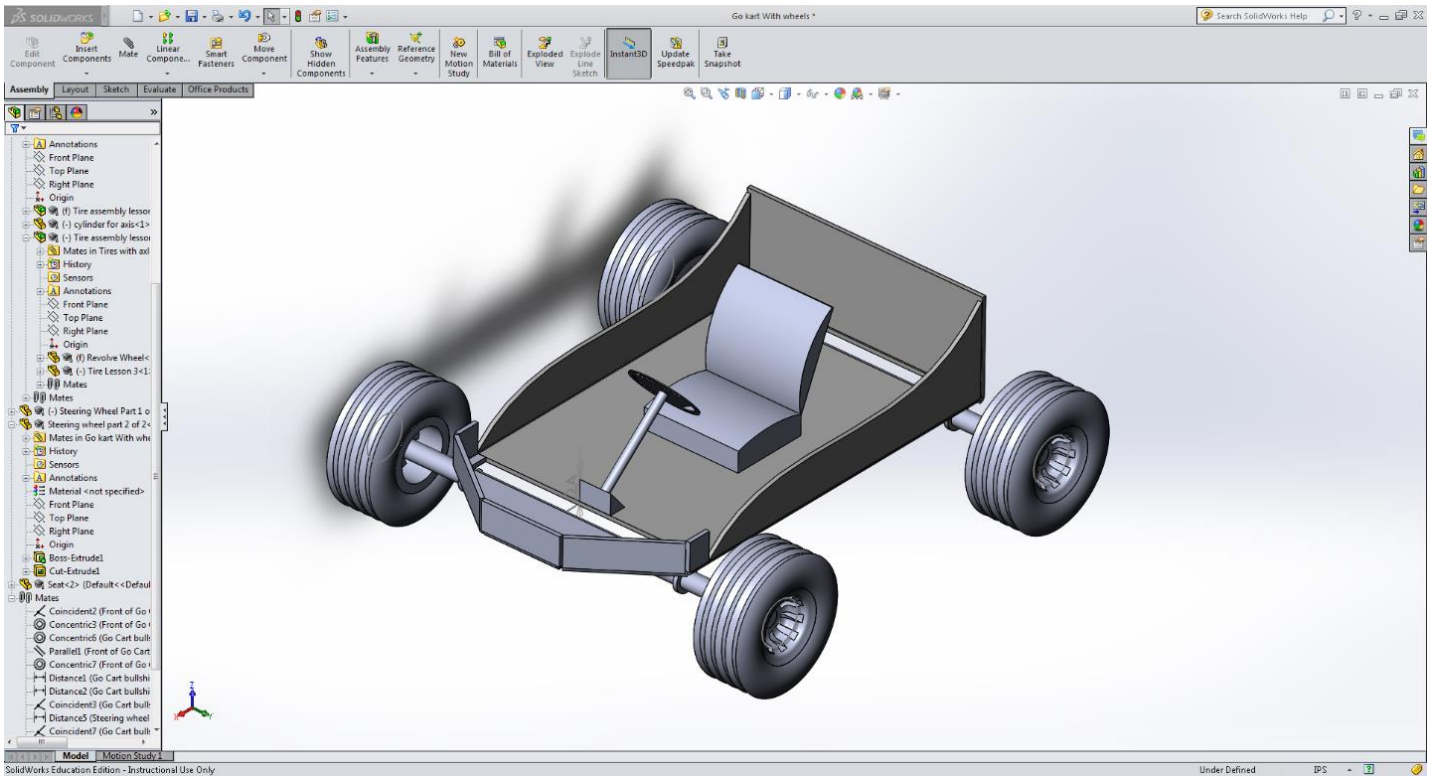

After getting assigned the task to make a go cart on solid works, there were 4 main parts that needed to be constructed. The wheel, the tire, the axle and the frame. Pictures of each are shown below.

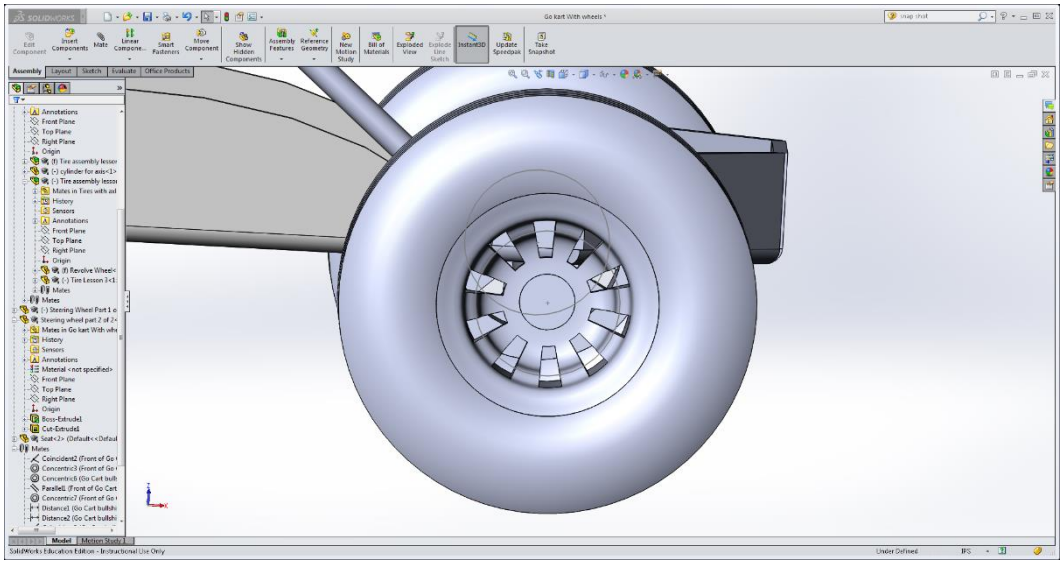

Wheel (6063-T6) Aluminum Alloy

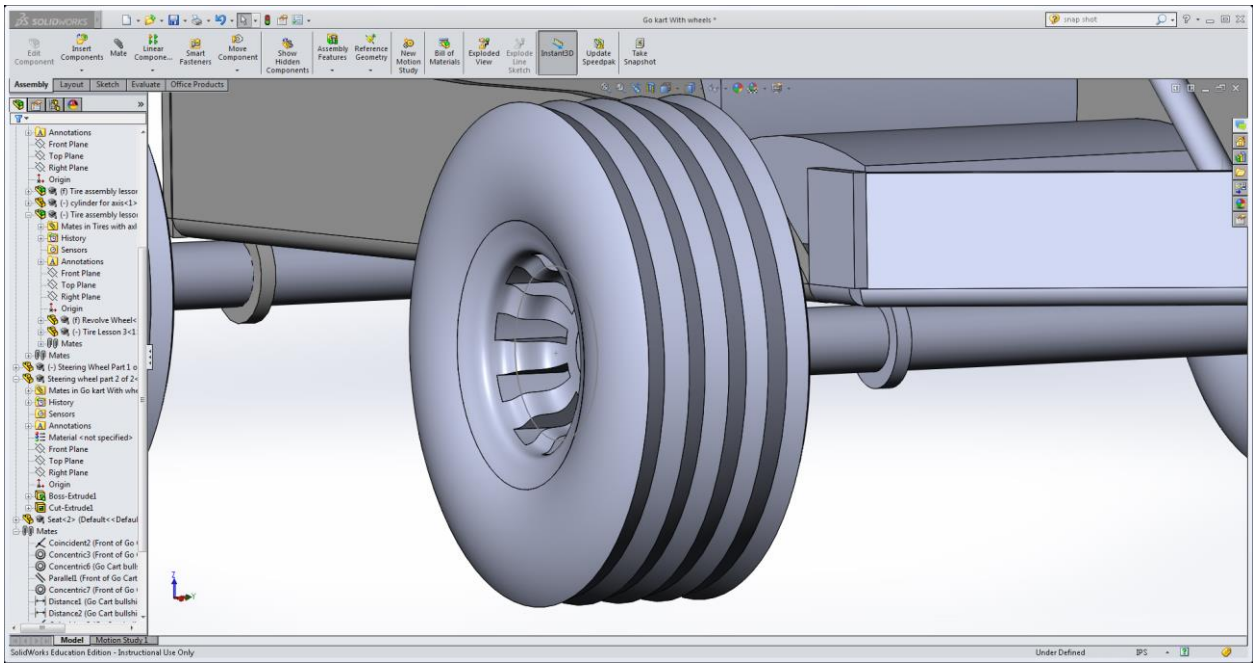

Tire (Silicon) Rubber

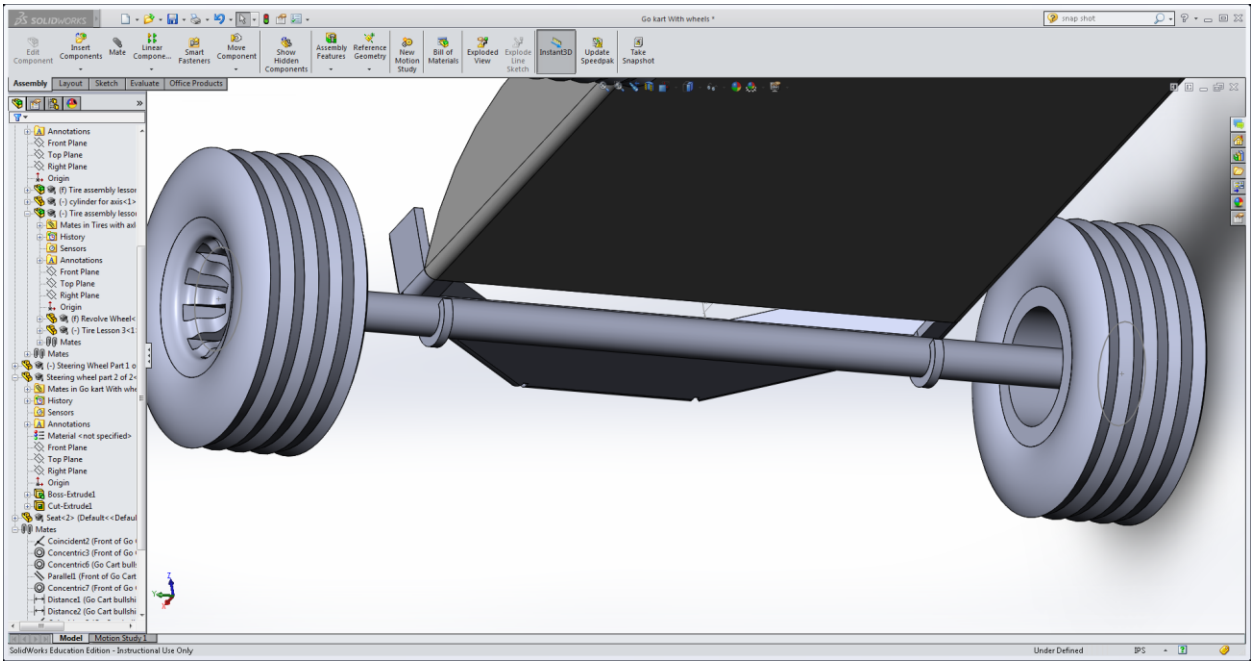

Axle (Cast) Alloy Steel

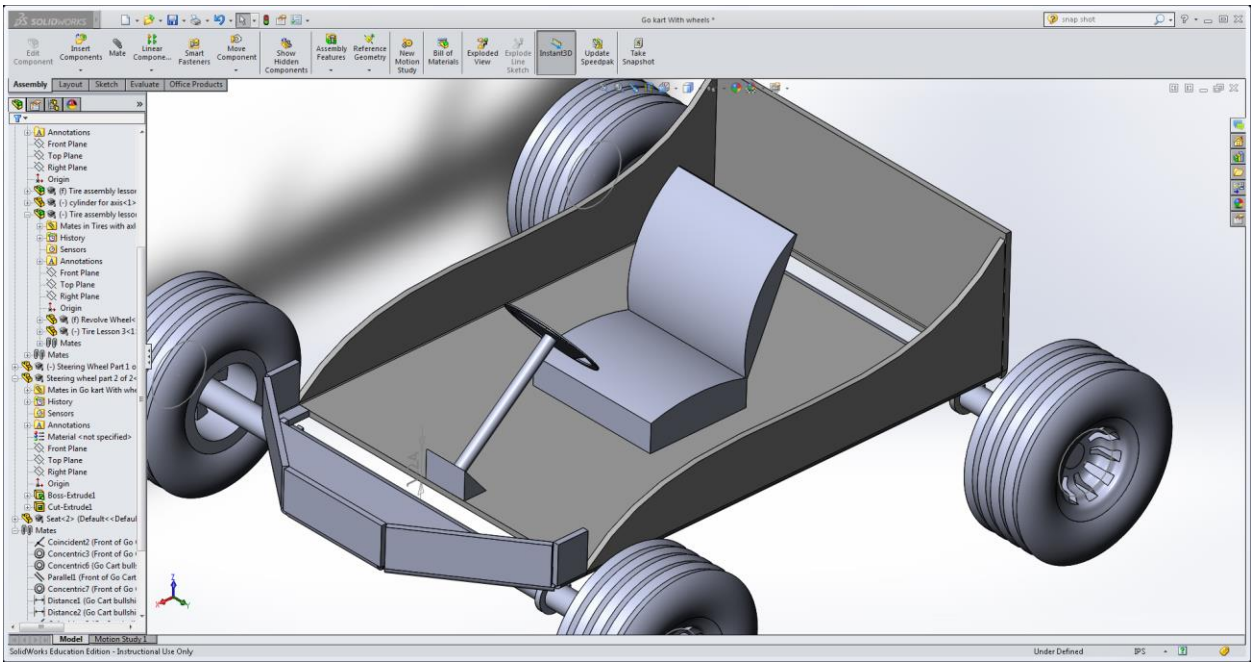

Frame (1060) Aluminum Alloy

Once these parts were built, the use of the go cart would affect how the material selection was chosen as well as modifications that would help it perform better. The use of this go cart is to go down hills and be able to maneuver.

In the pictures above, each material is shown after the part. The wheel was made of aluminum alloy since it was relatively light and was strong. The tire was made of rubber to have good grip on the roads and sometimes grass. The axle was made of steel because it needed to support the rider and frame. Lastly, the frame needed to be somewhat light weight and support the rider, so it was made from aluminum.

Once the general go cart was designed, some modifications needed to be made to improve performance. Two new parts to the go cart were a seat and a steering wheel. The purpose of this go cart is to go downhill so a steering wheel and a seat are essential for control and comfort. Also, the tires were upgraded. The new tires have treads that help when riding in the grass or on asphalt. They also help when the ground is slightly wet.

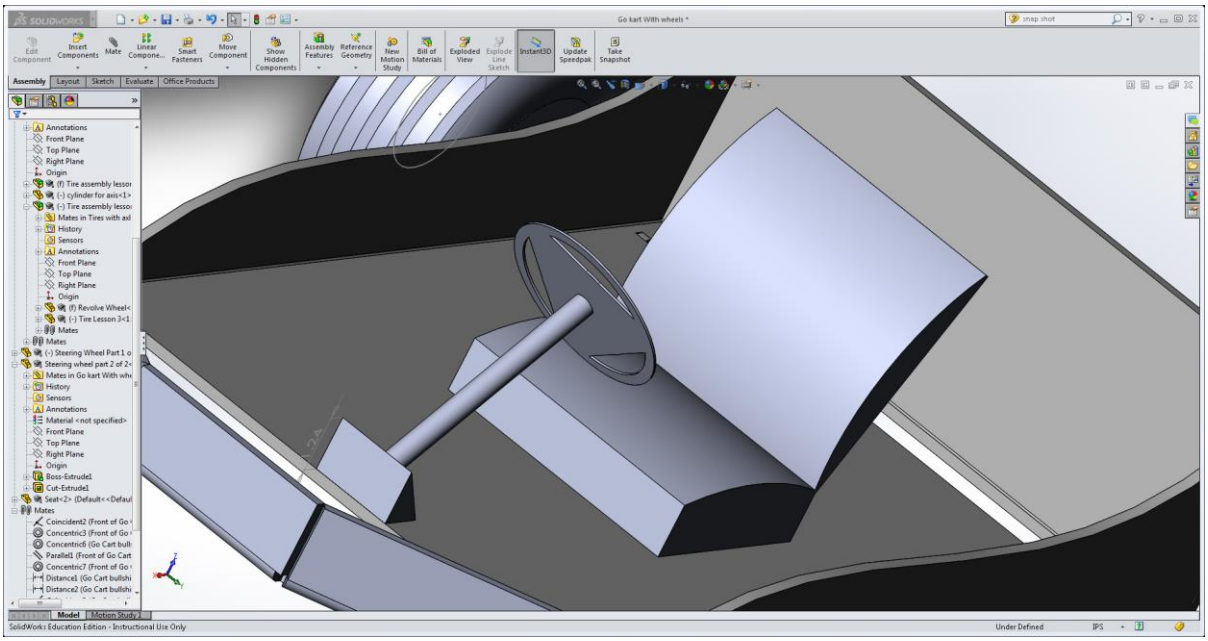

Steering Wheel and Seat

Once this process is done, the actual go cart can be made and be used for hours of fun.