EDSGN 100: Introduction to Engineering Design

Section 009 Team #4

http://personal.psu.edu/mlb5975/edsgn100_sp16_section009_team4_dp1.pdf

Dumpling Maker Mk. II

Submitted by: Hao Jing, Nicholas Lewis, Timothy Morrow, and Matthew Bell
Submitted to: Xinli Wu

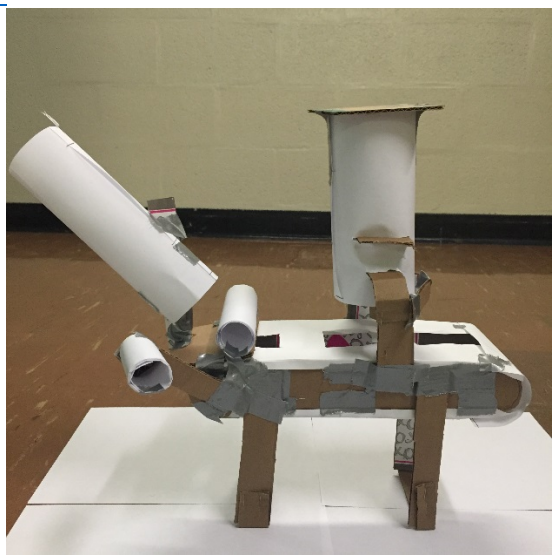

Abstract

This report looks into the process Team 4 went through to build and design a dumpling maker. The early brainstorming process, the operation of the dumpling maker, the drawings of it, the prototype, and the cost analysis will also be included.

Table of Contents

i.	Cover Page	Nicholas Lewis
ii.	Abstract	Nicholas Lewis
iii.	Table of Contents	Nicholas Lewis
1.	Introduction	Matthew Bell
2.	Problem Statement	Hao Jing
3.	Mission Statement	Hao Jing
4.	Design Specifications	Timothy Morrow
5.	Gantt Chart	Hao Jing
6.	Customer Needs Assessment	Hao Jing
7-8.	Concept Generation	All
9.	Design Selection Matrices	Timothy Morrow
10-15.	Working Drawings and Design Features	Nicholas, Timothy, Matt
16.	Operation Instructions	Timothy Morrow
17.	Engineering Analysis	Nicholas Lewis
18.	Summary	Nicholas Lewis
19.	Acknowledgement	All
20-21.	References	Matthew Bell

Introduction

This is the project report for team 4's dumpling maker design. Within this report, one can find the description of the design task, the design approach, the final design and prototype, engineering analysis and conclusion. The problem that we had to solve was to design a dumpling maker that is under 200 dollars, semi-automatic, safe to use and handle, and can produce no less than 10 dumplings a minute. To solve the problem we had to research costs of materials, and use our knowledge, creativity and expertise in solid works to make a final product design.

Problem Statement

Most people enjoying trying all different kinds of food throughout the world. Nowadays, Chinese food becomes more and more popular in the United States. One great example is the dumpling which is a unique and typical Chinese food. Unfortunately, although there are many different kinds of Chinese food restaurants in the college town, few of them are selling dumplings. In addition, the dumplings are considered to be very difficult to make. There are some dumpling makers in the market, however, they are really expensive and most of the local restaurant cannot afford it. In order to make the dumpling production process easier as well as reduce the production cost, our team is aim to development a semi-automatic dumpling maker. Using our dumpling maker, it would be easy and efficient to make dumplings. As a result, the local as well as foreign restaurants can use our dumpling maker to produce delicious dumplings.

Mission Statement

Our team’s mission is to create an affordable dumpling maker that is also safe to operate and could be used by businesses.

Design Specifications

Our dumpling maker meets the specifications of being semi-automatic, being able to make 10 dumplings a minute, costing less than $200, being safe, and being easy to maintain.

Gantt Chart

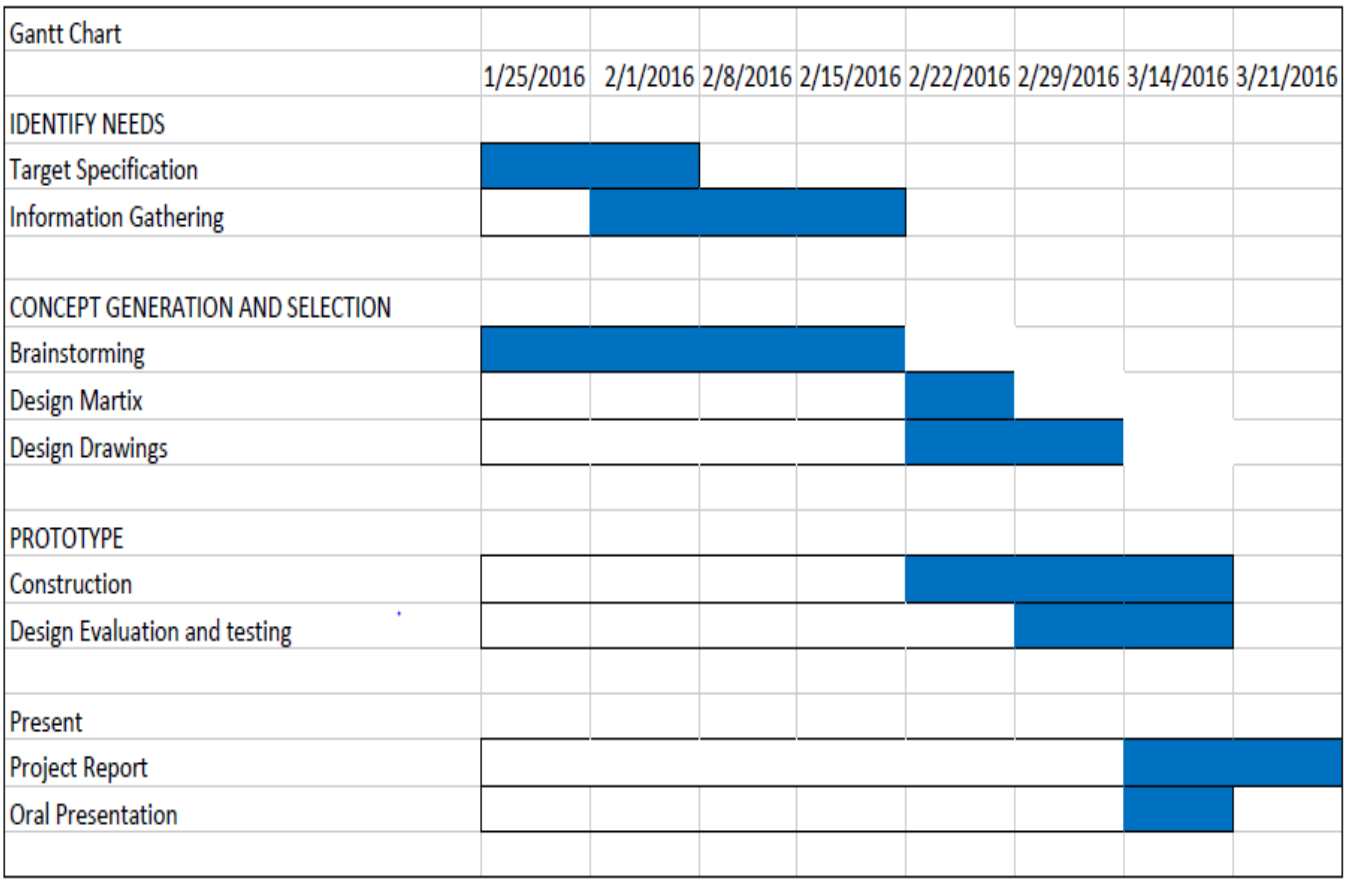
Gantt Chart
1/25/2016
2/1/2016
2/8/2016
2/15/2016
2/22/2016
2/29/2016
3/14/2016
3/21/2016
IDENTIFY NEEDS
Target Specification
Information Gathering
CONCEPT GENERATION AND SELECTION
Brainstorming
Design Martix
Design Drawings
PROTOTYPE
Construction
Design Evaluation and testing
Present
Project Report
Oral Presentation

Customer Needs Assessment

In order to meet the customer's requirements for a dumpling maker, our team have interviewed several local Chinese restaurants in the college town. In brief, the dumpling maker has to meet the following requirements:

1. The dumpling maker has to be food safety and easy to be operated because the local restaurants won't hire one more person just to operate the dumpling maker.

2. The dumpling maker has to be high efficiency, for instance, the dumpling maker should at least produce 8 dumplings per minute. Otherwise they preferred hand-made dumplings.

3. The dumpling maker has to be durable and easy to be assembled since the customers have to clean it up every day after use.

4. The dumpling maker had better in a smaller size since the area in the kitchen is fixed and most of the restaurants do not have much space left.

Concept Generation

Below are the drawings we made during brainstorming.

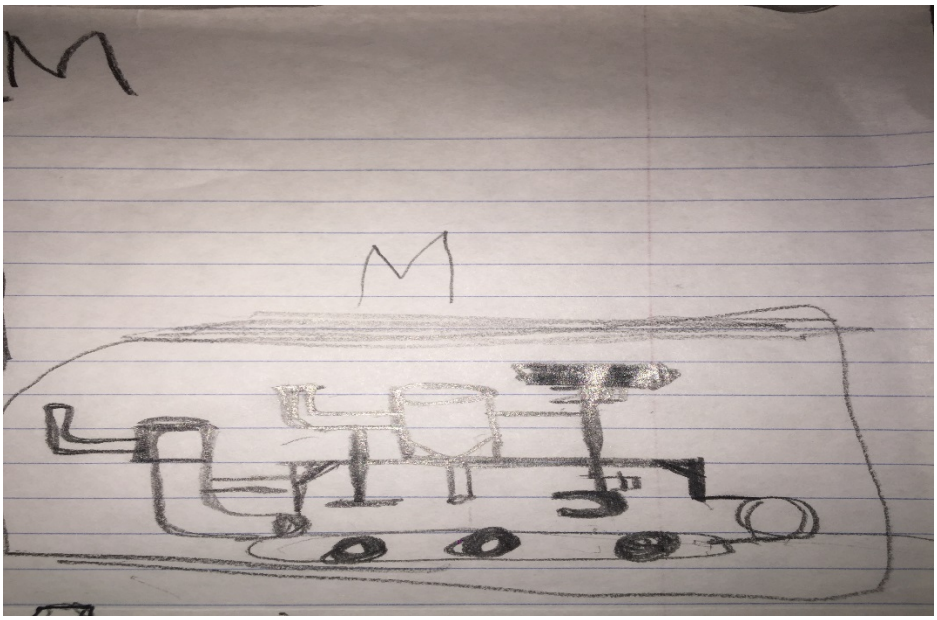

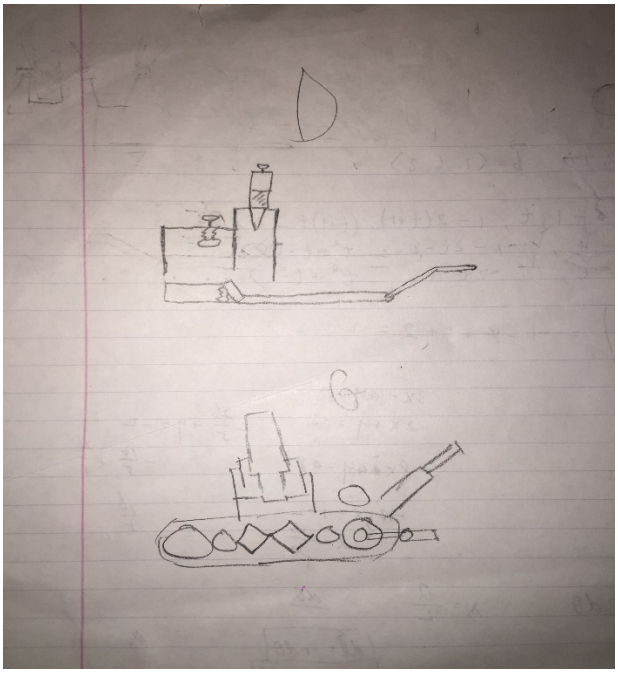

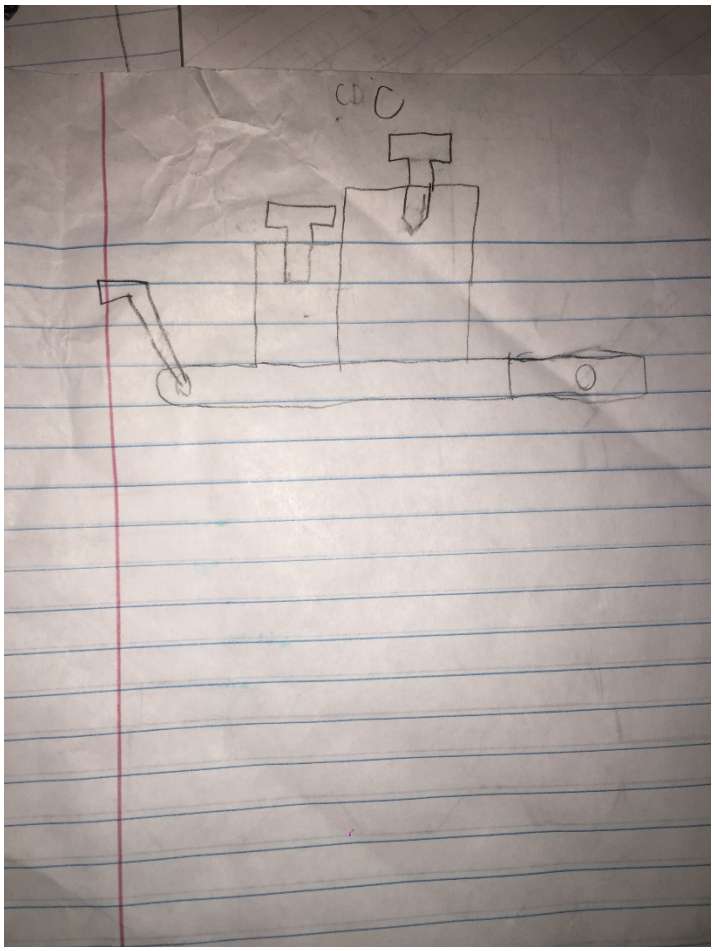
C

Design Selection Matrices

Criteria	M	G	C	D	Ref
Safety	+	0	+	+	0
Ease of Handling	0	+	-	-	0
Durability	0	0	+	+	0
Ease of Manufacturing	-	+	+	0	0
Cleaning	-	+	+	+	0
Speed	-	0	-	-	0
Size	+	+	+	+	0
Cost	+	+	+	+	0
Sum of +	3	5	6	5	0
Sum of 0	2	3	0	1	8
Sum of -	3	0	2	2	0
Net Score	0	5	4	3	0
Rank	4	1	2	3	4
Cont?	combine (ref)	cont	comb (D.)	comb (C.)	combine

Criteria	Weight	M	G (ref)	CD
Safety	0.2	4	3	4
Ease of Handling	0.1	2	3	2
Durability	0.1	2	3	3
Ease of Manufacturing	0.15	2	3	3.5
Cleaning	0.1	3	3	2
Speed	0.15	3	3	2
Size	0.1	2	3	3
Cost	0.1	2.5	3	3
Total		2.7	3	2.925
Rank		3	1	2
Develop?		N	Y	N

Working Drawings

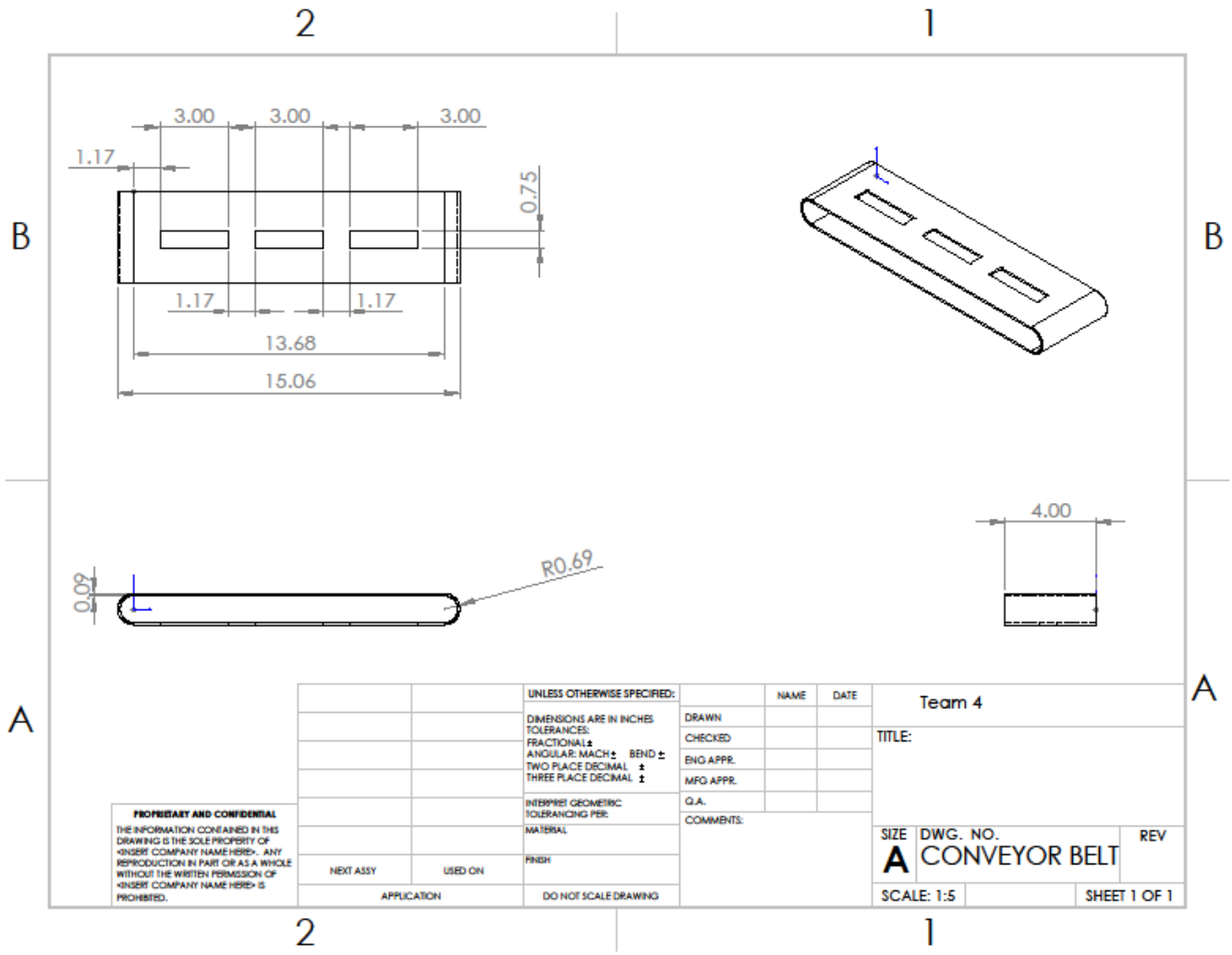

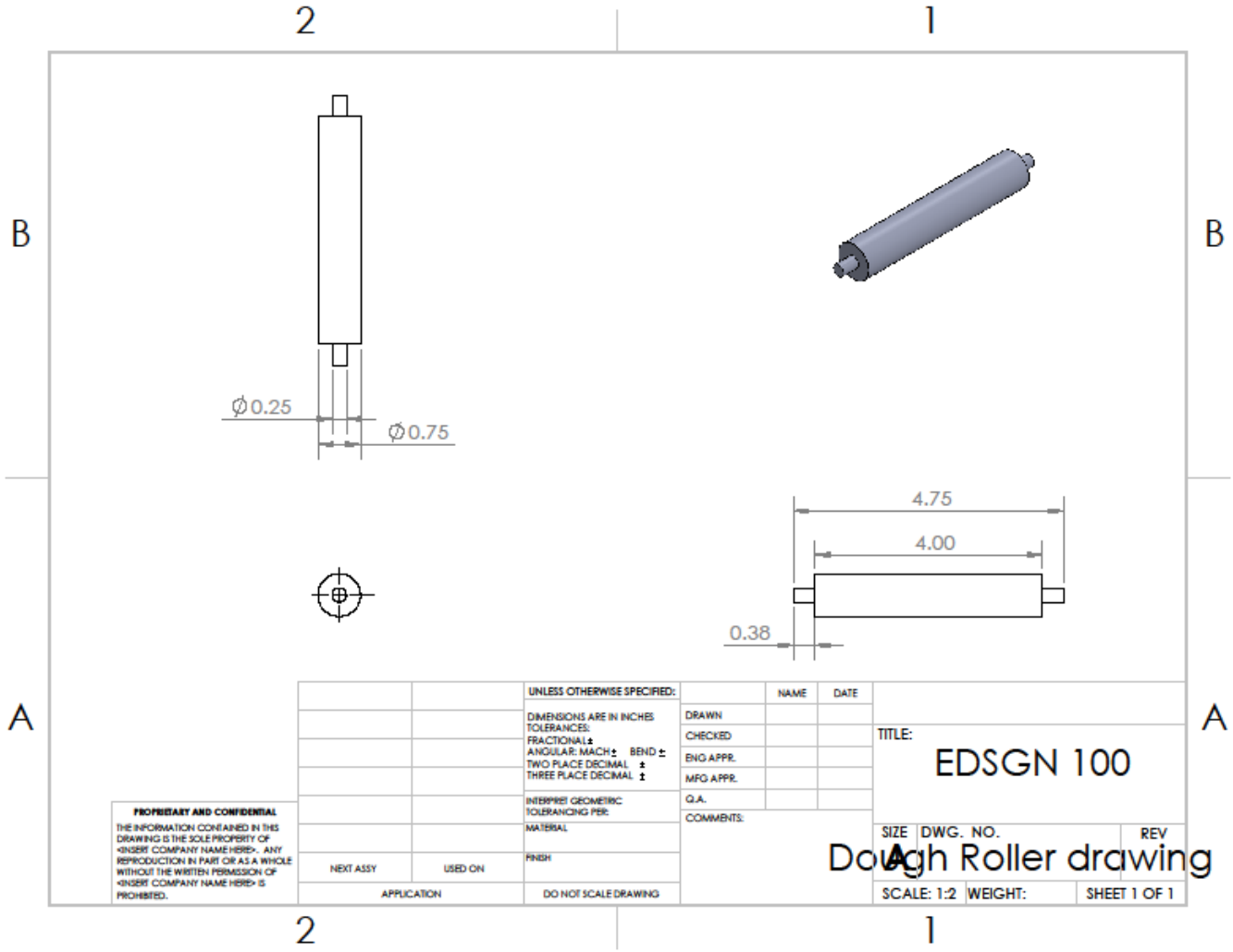
2
1
B
A
Ø0.25
Ø0.75
4.75
4.00
0.38
UNLESS OTHERWISE SPECIFIED:
DIMENSIONS ARE IN INCHES
TOLERANCES:
FRACTIONAL ±
ANGULAR: MACH ± BEND ±
TWO PLACE DECIMAL ±
THREE PLACE DECIMAL ±
INTERPRET GEOMETRIC TOLERANCING PER:
MATERIAL
FINISH
DO NOT SCALE DRAWING
NAME
DATE
DRAWN
CHECKED
ENG APPR.
MFG APPR.
Q.A.
COMMENTS:
TITLE:
EDSGN 100
SIZE
DWG. NO.
REV
A
Dough Roller drawing
SCALE: 1:2
WEIGHT:
SHEET 1 OF 1
NEXT ASSY
USED ON
APPLICATION
PROPRIETARY AND CONFIDENTIAL
THE INFORMATION CONTAINED IN THIS DRAWING IS THE SOLE PROPERTY OF <INSERT COMPANY NAME HERE>. ANY REPRODUCTION IN PART OR AS A WHOLE WITHOUT THE WRITTEN PERMISSION OF <INSERT COMPANY NAME HERE> IS PROHIBITED.

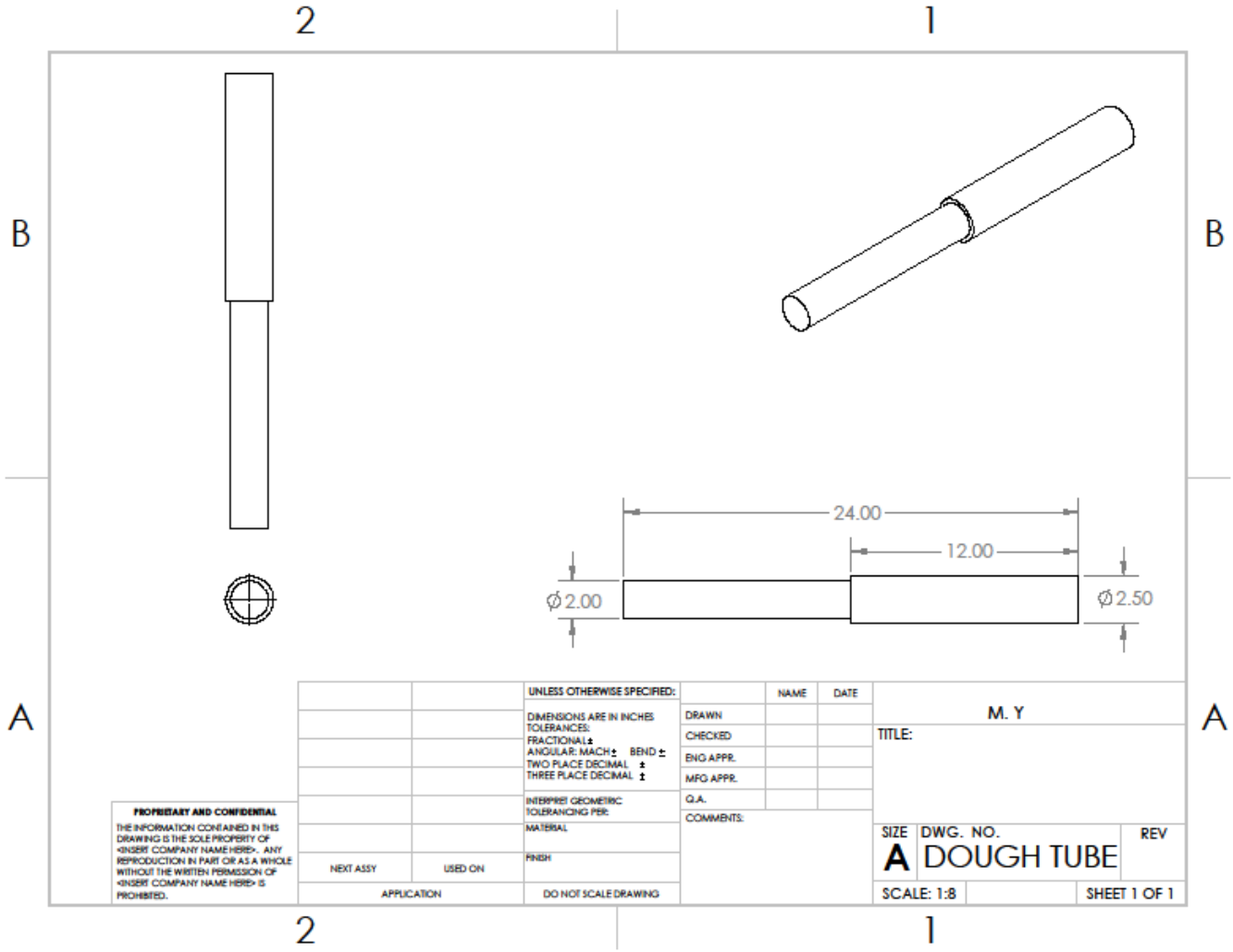
24.00
12.00
Ø2.00
Ø2.50
UNLESS OTHERWISE SPECIFIED:
DIMENSIONS ARE IN INCHES
TOLERANCES:
FRACTIONAL ±
ANGULAR: MACH ± BEND ±
TWO PLACE DECIMAL ±
THREE PLACE DECIMAL ±
INTERPRET GEOMETRIC TOLERANCING PER:
MATERIAL
FINISH
DO NOT SCALE DRAWING
NAME
DATE
DRAWN
CHECKED
ENG APPR.
MFG APPR.
Q.A.
COMMENTS:
M. Y
TITLE:
SIZE
A
DWG. NO.
DOUGH TUBE
REV
SCALE: 1:8
SHEET 1 OF 1
PROPRIETARY AND CONFIDENTIAL
THE INFORMATION CONTAINED IN THIS DRAWING IS THE SOLE PROPERTY OF <INSERT COMPANY NAME HERE>. ANY REPRODUCTION IN PART OR AS A WHOLE WITHOUT THE WRITTEN PERMISSION OF <INSERT COMPANY NAME HERE> IS PROHIBITED.
NEXT ASSY
USED ON
APPLICATION

ITEM NO.	PART NUMBER	DESCRIPTION	QTY.
1	Internal	contains: 2 large rollers, 2 small rollers, 2 square crimping rollers	1
2	Leg	contains: 4 screws	4
3	Cutter	contains: 2 blades, 8 springs	1
4	Filling tube		1
5	Dough tube		1
6	Dough roller		1
7	Crank		1

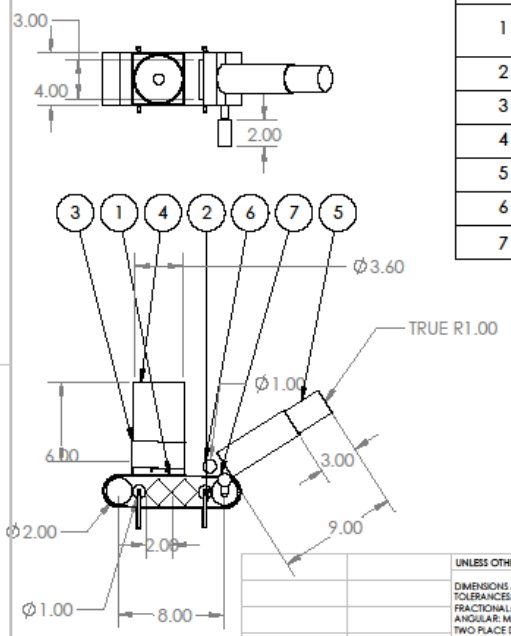

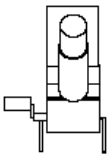

PROPRIETARY AND CONFIDENTIAL
THE INFORMATION CONTAINED IN THIS DRAWING IS THE SOLE PROPERTY OF <INSERT COMPANY NAME HERE>. ANY REPRODUCTION IN PART OR AS A WHOLE WITHOUT THE WRITTEN PERMISSION OF <INSERT COMPANY NAME HERE> IS PROHIBITED.

NEXT ASSY | USED ON
APPLICATION

UNLESS OTHERWISE SPECIFIED:
DIMENSIONS ARE IN INCHES
TOLERANCES:
FRACTIONAL ±
ANGULAR: MACH ± BEND ±
TWO PLACE DECIMAL ±
THREE PLACE DECIMAL ±
INTERPRET GEOMETRIC TOLERANCING PER:
MATERIAL
FINISH
DO NOT SCALE DRAWING

	NAME	DATE
DRAWN		
CHECKED		
ENG APPR.		
MFG APPR.		
Q.A.		

COMMENTS:

TITLE:

SIZE A | DWG. NO. Assem2 | REV
SCALE: 1:8 | WEIGHT: | SHEET 1 OF 1

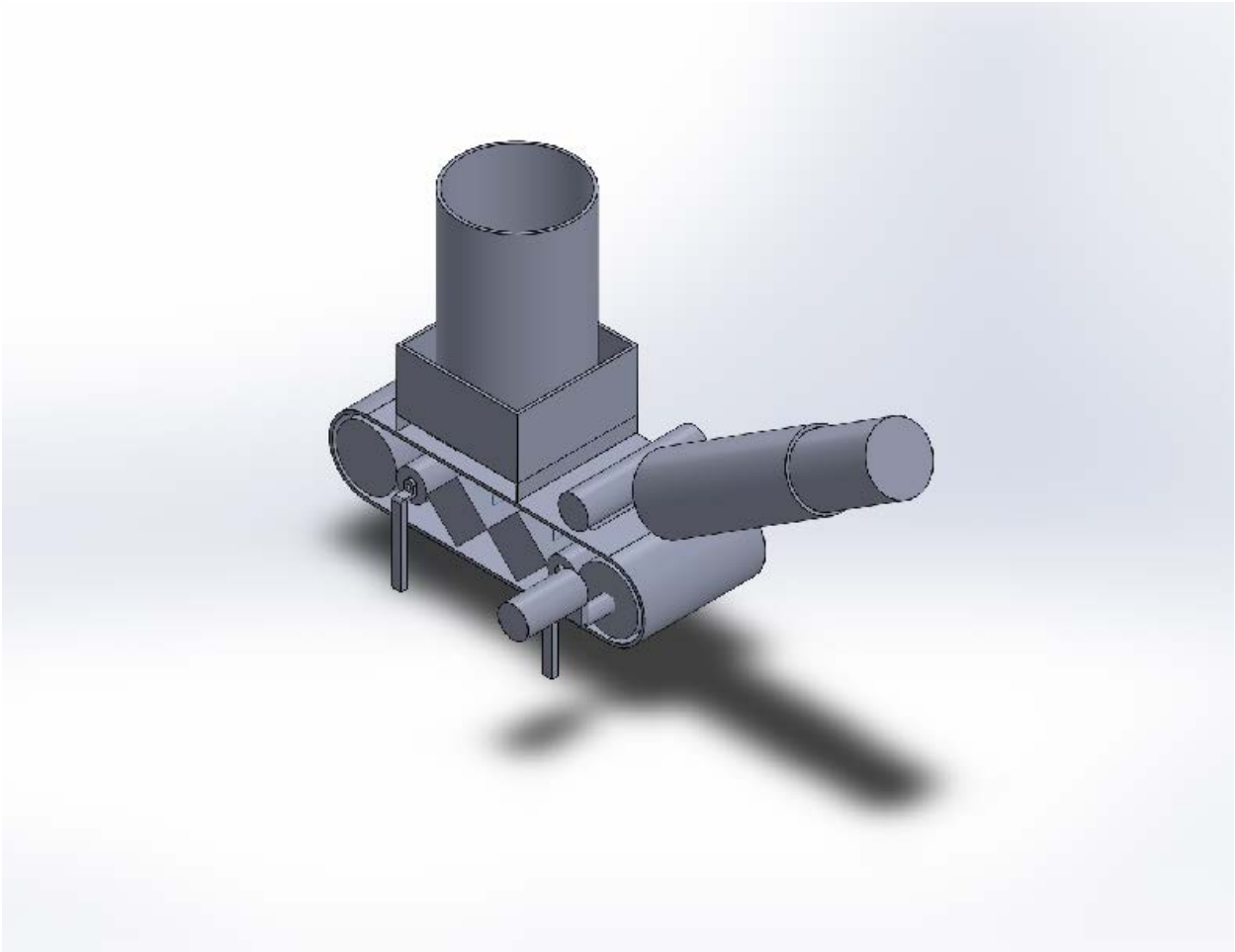

Prototype (Scale: 1:1)

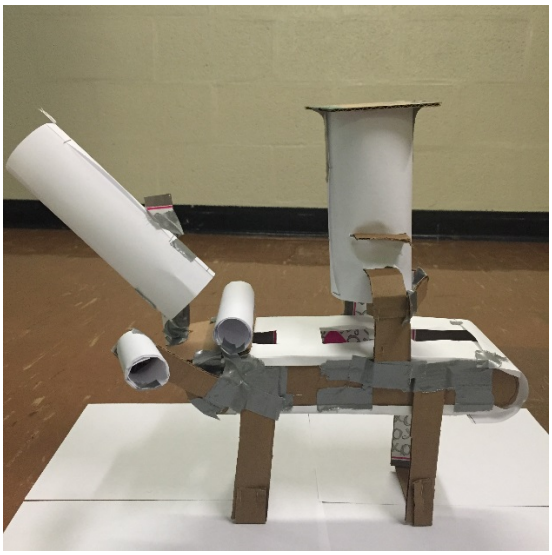

Design Features

This dumpling maker design has many features that contribute to its excellent functionality. The most important feature of the design is the conveyor belt, which is made of food grade Nitrile. This material is very resistant to animal fats and oils, so it stays very clean. Also, the belt has rectangles cut into it every few inches, which allows the dumpling to be clamped and dropped through onto a plate. This feature of the belt allows many dumplings to be made in a short amount of time. Another key feature is the filling container, which is mounted on the machine by a spring-loaded mechanism. With this system, the container is easily refilled and problems are minimized. A third feature of the design is the hand crank, which makes the machine work. It is very easy to use and convenient. The combination of these features along with others create a dumpling maker that is safe and easy to use.

Operation Manual

1. Put dough in the dough tube
2. Put desired filling in filling container
3. Begin to crank the mechanism applying pressure to the dough tube plunger
4. Allow the dough to flatten and move along the conveyer belt until positioned under the cutting mechanism
5. Stop cranking
6. Push the cutting plunger down to cut dough, dispense filling, and push dumpling through slots
7. Resume cranking to crimp the dumpling
8. The dumpling will be dispensed from the bottom of the machine
9. Repeat steps 3-8 until the desired number of dumplings is reached

Engineering Analysis

Working Mechanism:

There are several working parts to our design. The first is the crank, which is attached to several gears, rollers, and cubes. As the crank is turned, the gears and rollers both turn, moving both the cubes and the conveyor belt. The gears will be set so that when the holes on the conveyors are above the cube, the dumpling will be able to slide down, be sealed, and drop out in time for the next dumpling to drop down. Also, there is a mechanism on the filling container. This works when the plunger is pushed down, there are springs controlling different stages. First, the filling is pushed onto the dough, the as a set of springs are pushed down, the blades cut the dough, then final, the dough is pushed through the rectangle.

Cost Analysis:

The total cost of our dumpling maker is $140.65. This is well under the $200.00 cap for this project. The part of the design that costs the most is the aluminum framing we use for the base of the dumpling maker. This could be cut down further by using a different material, or just using less of it. Overall though, this is about as inexpensive as this deign can be without sacrificing anything else, such as safety and efficiency.

Summary

This has been Team 4's Design Project 1 report. The dumpling maker is an efficient design that is carefully thought out, and creating it taught us a lot about the specifics of design. We will use the knowledge obtained throughout the process for future designing and engineering.

Acknowledgement

We would like to thank Dr. Xinli Wu for teaching us the skills required to complete this project.

References

3/4" Diameter Conveyor Roller, McMaster-Carr. (n.d.). Retrieved March 02, 2016, from http://www.mcmaster.com/#6073k401/=11dv63p

ABS Rod, McMaster-Carr. (n.d.). Retrieved March 02, 2016, from http://www.mcmaster.com/#8587k9/=11mhe9m

Aluminum Bolt-Together Framing, McMaster-Carr. (n.d.). Retrieved March 02, 2016, from http://www.mcmaster.com/#8809t11/=118m8cj

Clear PVC Tubing, McMaster-Carr. (n.d.). Retrieved March 02, 2016, from http://www.mcmaster.com/#5231k421/=118lv3r

Conveyor Roller, McMaster-Carr. (n.d.). Retrieved March 02, 2016, from http://www.mcmaster.com/#2278t11/=118lrrt

Hex Bolt, Lowes. (n.d.). Retrieved March 02, 2016, from http://www.lowes.com/pd_63326-37672-190183___?productId=3058597&pl=1&Ntt=thehilliam group 3/8 in

Optically Clear Cast Acrylic Cube, McMaster-Carr. (n.d.). Retrieved March 02, 2016, from http://www.mcmaster.com/#8680k27/=118ly6d

Plastic Gear, McMaster-Carr. (n.d.). Retrieved March 02, 2016, from http://www.mcmaster.com/#57655k58/=11ds2aw

Razor Blade, McMaster-Carr. (n.d.). Retrieved March 02, 2016, from http://www.mcmaster.com/#3962a1/=118md5x

Small Diameter Conveyor Rollers, McMaster-Carr. (n.d.). Retrieved March 02, 2016, from http://www.mcmaster.com/#2282t11/=11dv8ug

Springs, McMaster-Carr. (n.d.). Retrieved March 02, 2016, from http://www.mcmaster.com/#compression-springs/=1151120

Squeeze Bottle, McMaster-Carr. (n.d.). Retrieved March 02, 2016, from http://www.mcmaster.com/#1044k7/=118mwg1

White Crank, Lowes. (n.d.). Retrieved March 02, 2016, from http://www.lowes.com/pd_195778-76018H 3713___?productId=3019384&pl=1&Ntt=crank

TOSEI tabletop dumpling machine Gyoza maker. (n.d.). Retrieved March 20, 2016, from http://www.tanfar.net/sdp/444642/4/pd-2470152/10278155-1449109/TOSEI_tabletop_