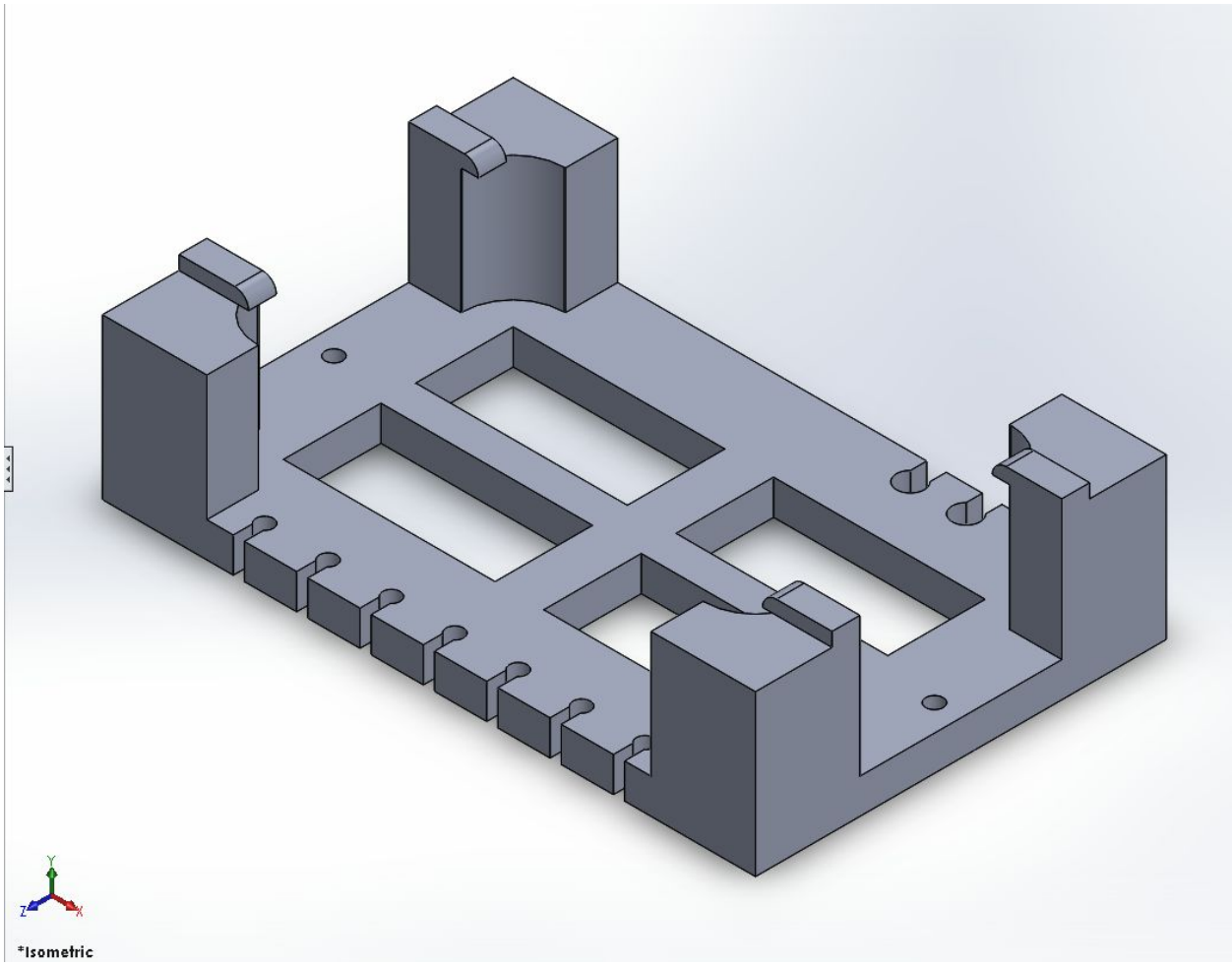

The Bio-Bracket (USB Hub Bracket)

Sponsored By,

Team 4 (Matthew Bell, Tim Morrow, Nick Lewis, Hao Jing)
Engineering Design 100: Introduction to Engineering Design
April 29th, 2016
Section 09
Professor Xinli Wu Ph.D., P.E.

Abstract

This report contains information about the design project made by Team 4. This information includes the thinking and design processes, drawings, and analysis performed during the course of the project. Sponsored by Lockheed Martin, the project addresses the problem of designing a new USB Hub Bracket.

Table of Contents

Title	Page #'s	Author(s)
Abstract	1	Nicholas Lewis
Table of Contents	2	Nicholas Lewis
Introduction	3	Hao Jing
Design Task	4	Matthew Bell
Design Process	5	Timothy Morrow
Prototype/Model	9	All Authors
Engineering Analysis	11	Timothy, Nicholas
Summary and Conclusion	14	Hao Jing
Link to Powerpoint	16	All Authors
Link to Brochure	17	All Authors
Acknowledgements	18	Matthew Bell
References	19	Matthew Bell

Introduction

For the advancement of a custom avionics mission system, it will require a USB Hub bracket as a debug and auxiliary mounting device. It will allow the bracket to have an increased capacity and installations in various of places on the platform. The project will also provide a vertical configuration.

Design Task

Problem Statement

The problem Team 4 is addressing is that the USB hub is currently 4 ports, and is horizontal. Team 4 needs to make a USB rack that can fit a 7 port hub, mounts vertically, and can be additively manufactured.

Mission Statement

Team 4 wants to create a USB mounting rack that is durable, environmentally friendly (biodegradable), and versatile.

Design Specifications

The design specifications are as follows:

- Design must be able to fit a 7 port USB hub.
- Design must be able to be vertically mounted
- Design must have a new cable retention system.
- Design must be able to be additively manufactured.
- Survive an environment from 0-25 degrees celsius

Design Process

Team 4 managed project time working on the project by creating and following a gantt chart (Table 1.).

Table 1. Gantt Chart

Gantt Chart	3/28/2016	4/4/2016	4/6/2016	4/11/2016	4/13/2016	4/18/2016	4/20/2016	4/25/2016	4/28/2016
IDENTIFY NEEDS									
Target Specifications									
Information Gathering									
Concept Generalization and Selection									
Brainstorming									
Design Selection									
Design Drawings									
PROTOTYPE									
3D Printing									
Design Evaluation and Testing									
PRESENT									
Project Report									
Oral Presentation									

Concept Generation

Brainstorming

A)

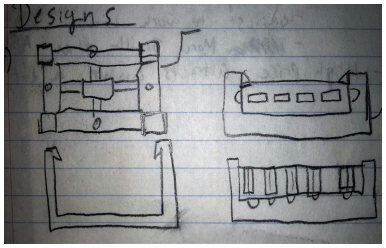

B)

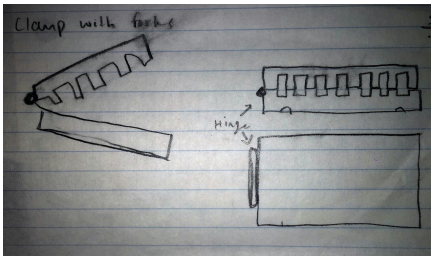

C)

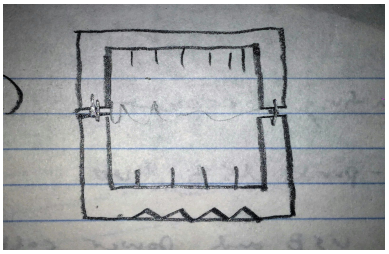

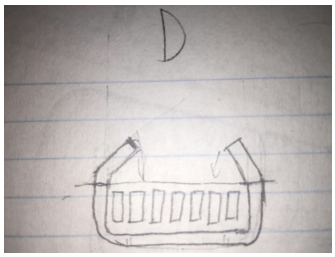

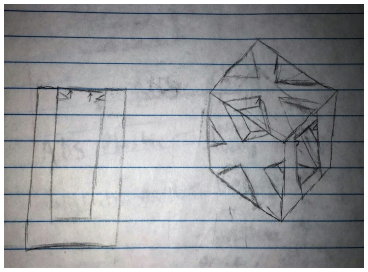

D)

E)

The five concepts above were created during the brainstorming process. Each concept had certain features that made it unique. The features were as follows:

- Sketch A: Overhanging clips holding USB Hub in place.
- Sketch B: Clamp system with two hinged parts clamping Hub in place.
- Sketch C: Two separate parts on top and bottom of Hub.
- Sketch D: Overhanging pylons holding Hub in place.
- Sketch E: Single mount with X shaped pylons on sides.

Design matrixes were used to narrow down these concepts and locate key design features.

Design Matrix

Table 2. Plus/Minus Design Matrix

	Concept A	Concept B	Concept C	Concept D	Concept E	Reference
Durable (V)	0	0	0	0	0	0
Cord Retention	-	+	0	+	+	0
Weight	+	-	+	0	0	0
Number of P	0	-	0	-	-	0
Cost	+	0	+	0	0	0
Stackability	+	+	-	+	0	0
Total	2	0	1	1	0	0
Rank	1	4	2	2	4	4
Continue?	Yes	No	Comb	Comb	No	No

The first design matrix (Table 2.) indicated Concept A as the most favorable design thus far, ranking the highest among the others. Concepts C and D would be combined for the next Design Matrix to see if the combined concept would be more favorable.

Design Matrix 2 (Weighted)

Table. 3 Weighted Design Matrix

	Weight (%)	Concept A	Concept CD
Durable	20	4	3
Cord Retention	10	4	4
Weight	20	5	4
Number of Parts	30	5	3
Cost	10	5	4
Stackability	10	2	4
Total (weighted)	N/A	4.4	3.5
Selection	N/A	Yes	No

Rationale

The reason the team picked this project was that it was thought the bracket was the design that gave the most freedom to change while also being a very practical item used in many places in the modern world.

Description of Best Design

The best design selected has all the qualities to be effective and also meets all the given criteria. The design may be mounted vertically, is large enough to fit a 7 port USB hub, and has an effective, updated cable retention system.

Design Drawing

FIG. 2. Orthographic Views of CAD Model

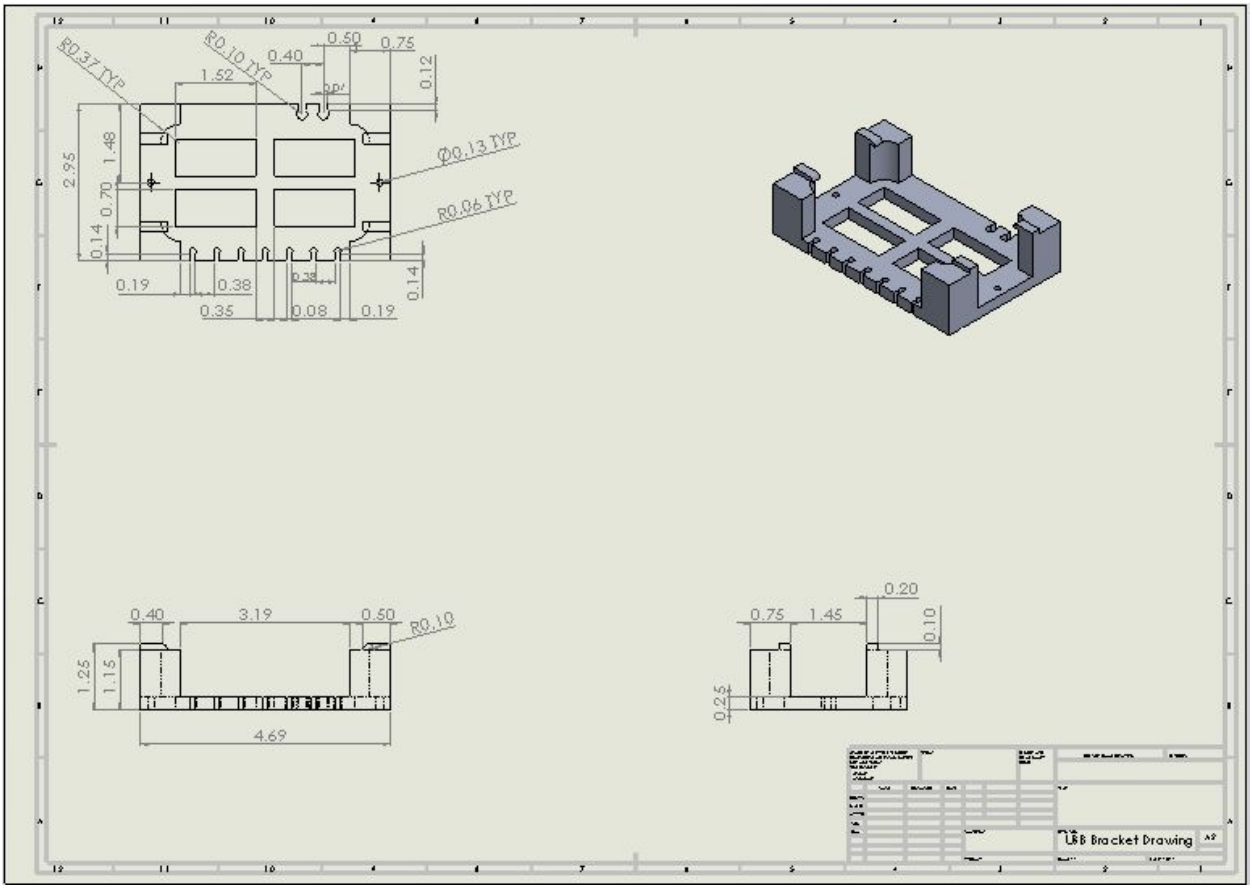

Prototype

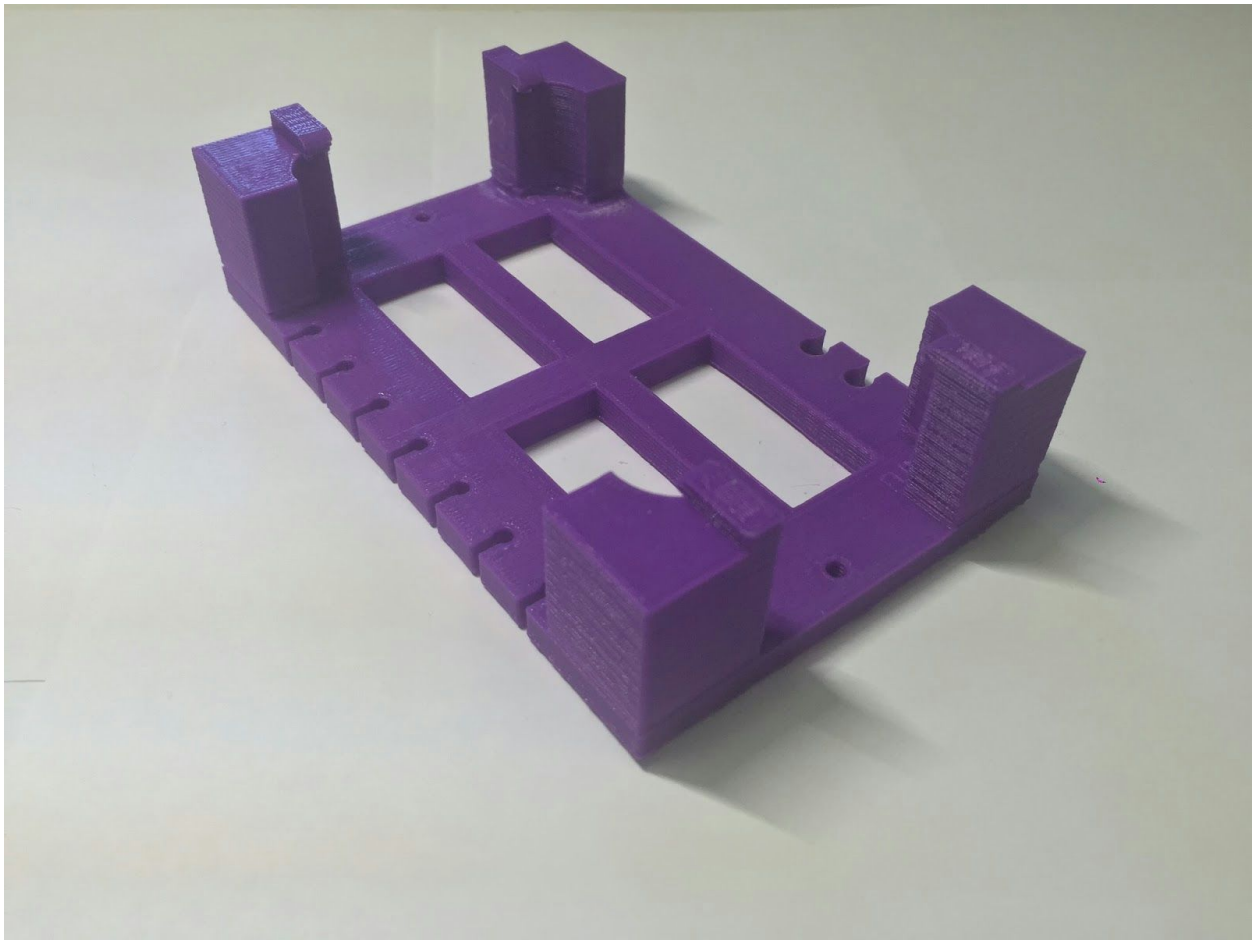

Engineering Analysis

The design was analyzed at 90 Hz, 245 Hz, 295 Hz, and 455 Hz under a force of 5 newtons with a damping ratio of 1 and fixed at the screw holes. It can be observed that the design withstood 90 Hz with no problems or failure but gradually warped at vibration frequency increased. This simulation is only speculation since the exact material was unable to be used for testing and the damping ratio of 1 set the material to absolute rigidity. Even with these conditions, it can be seen that the design performs with intended capabilities under frequencies commonly found in UAV aircraft. It can be assumed that use of the product would yield sufficient and successful results.

90 Hz

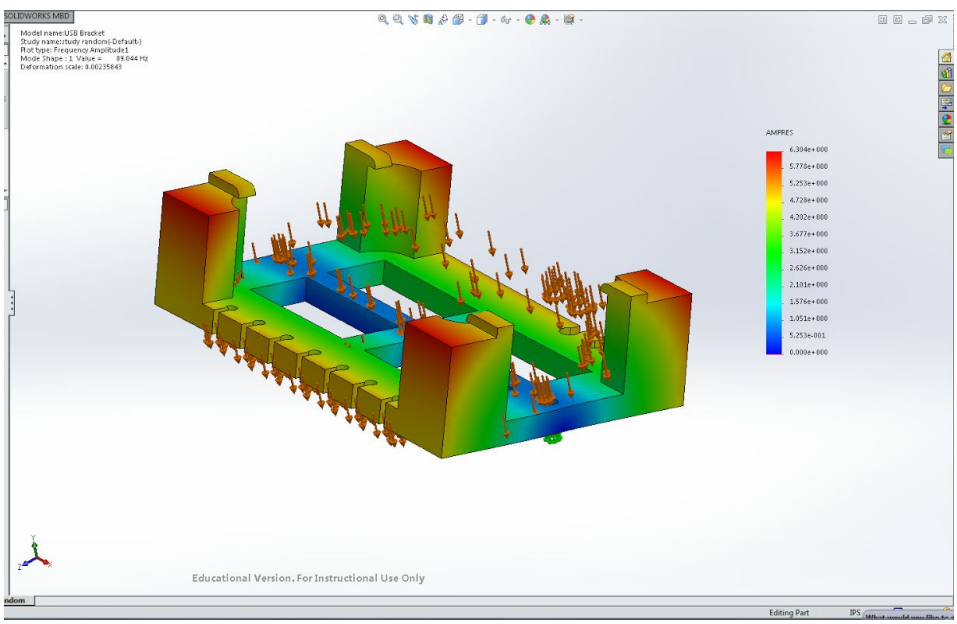

245 Hz

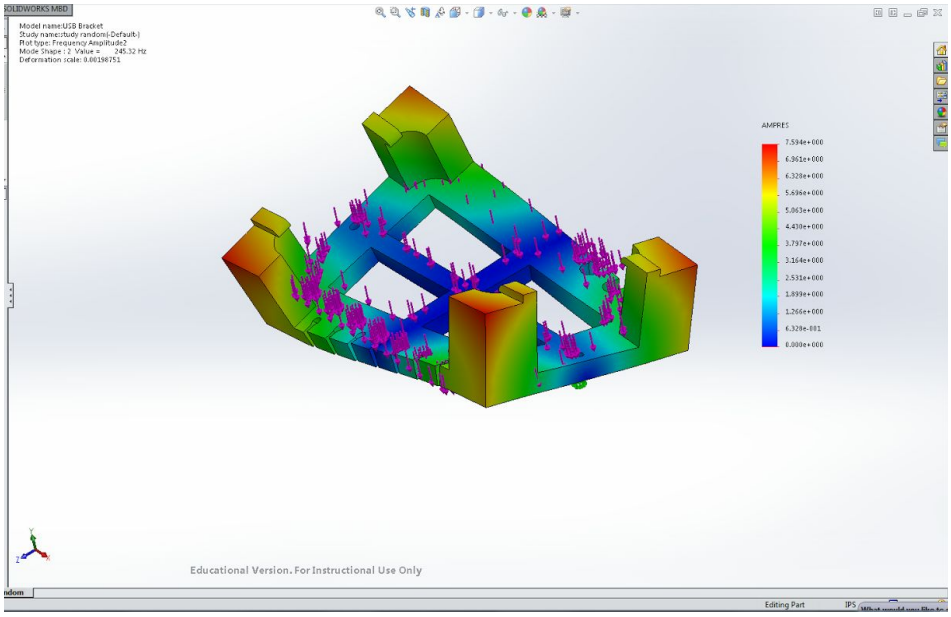
SOLIDWORKS MBD
Model name:USB Bracket
Study name:study random(-Default-)
Plot type: Frequency Amplitude2
Mode Shape : 2 Value = 245.32 Hz
Deformation scale: 0.00198751
AMPRES
7.594e+000
6.961e+000
6.328e+000
5.696e+000
5.063e+000
4.430e+000
3.797e+000
3.164e+000
2.531e+000
1.899e+000
1.266e+000
6.329e-001
0.000e+000
Educational Version. For Instructional Use Only
Editing Part
IPS

295 Hz

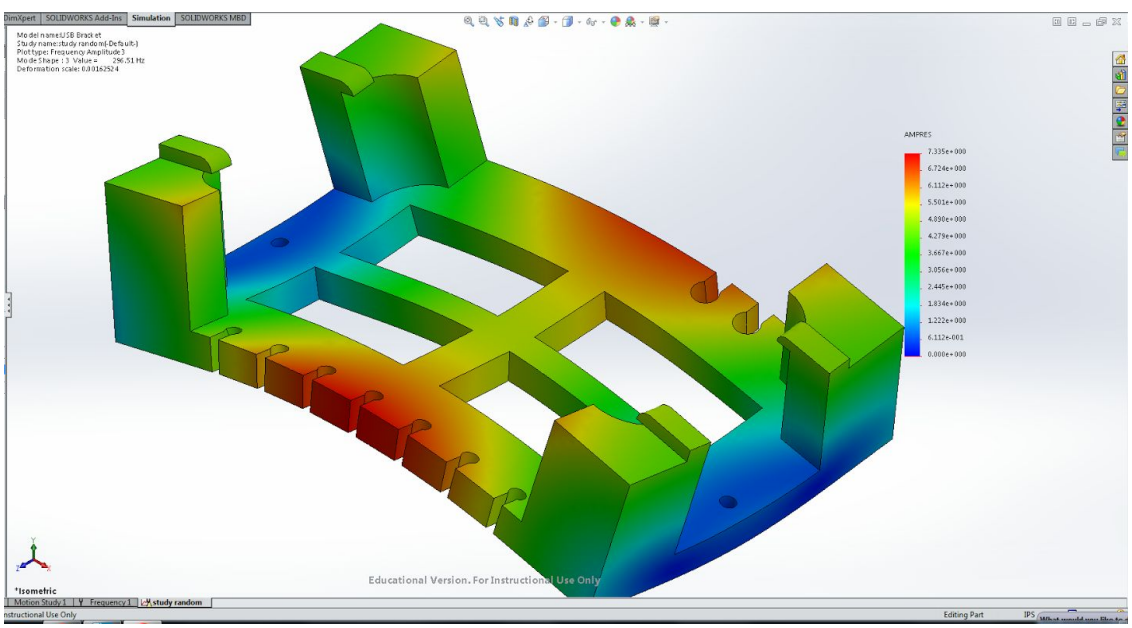
DimXpert
SOLIDWORKS Add-Ins
Simulation
SOLIDWORKS MBD
Model name:USB Bracket
Study name:study random(-Default-)
Plot type: Frequency Amplitude3
Mode Shape : 3 Value = 296.51 Hz
Deformation scale: 0.01162524
AMPRES
7.335e+000
6.724e+000
6.112e+000
5.501e+000
4.890e+000
4.279e+000
3.667e+000
3.056e+000
2.445e+000
1.834e+000
1.222e+000
6.112e-001
0.000e+000
Educational Version. For Instructional Use Only
*Isometric
Motion Study 1
Frequency 1
study random
Editing Part
IPS

455 Hz

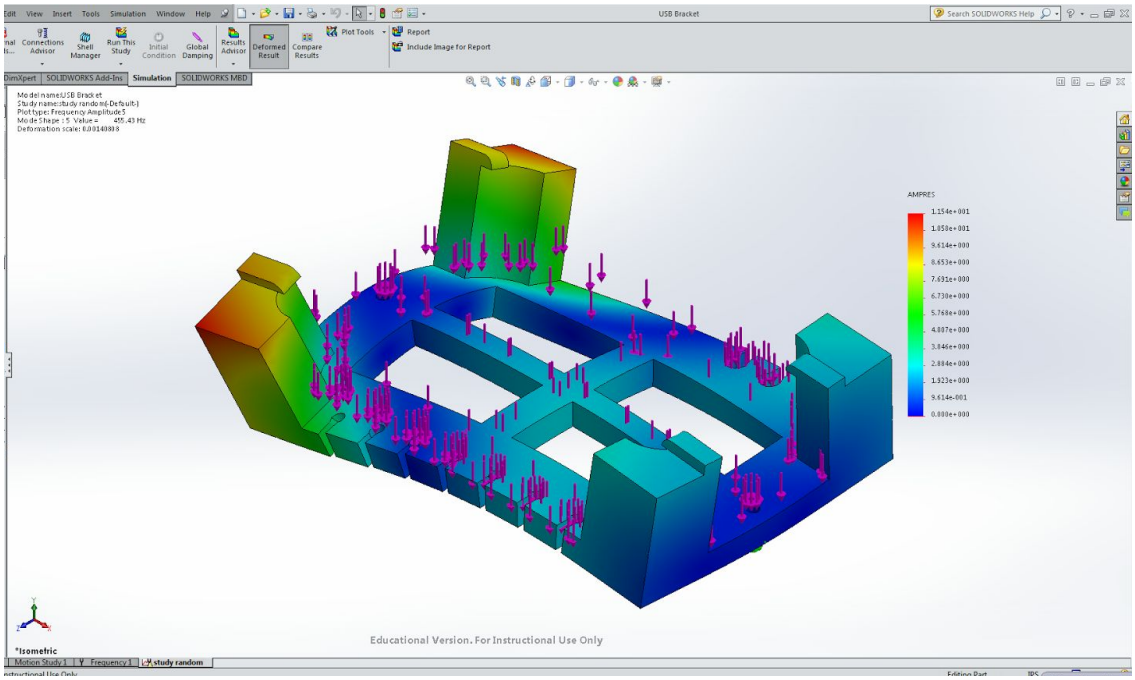
USB Bracket
Search SOLIDWORKS Help
Edit View Insert Tools Simulation Window Help
Connections Advisor
Shell Manager
Run This Study
Initial Condition
Global Damping
Results Advisor
Deformed Result
Compare Results
Plot Tools
Report
Include Image for Report
DimXpert
SOLIDWORKS Add-Ins
Simulation
SOLIDWORKS MBD
Model name:USB Bracket
Study name:study random(-Default-)
Plot type: Frequency Amplitude5
Mode Shape : 5 Value = 455.43 Hz
Deformation scale: 0.0314093
AMPRES
1.154e+001
1.059e+001
9.614e+000
8.653e+000
7.691e+000
6.730e+000
5.768e+000
4.807e+000
3.846e+000
2.884e+000
1.923e+000
9.614e-001
0.000e+000
Educational Version. For Instructional Use Only
*Isometric
Motion Study 1
Frequency 1
study random

Assessment and Advantages

The design meets all of the required criteria given by Lockheed Martin. The design can be mounted vertically by putting screws through the two given screw holes. It can also fit a 7 port USB hub, as it was designed with the D-LINK hub in mind. Lastly, the cable retention system has been updated, as now the operator may pull cables into the slots made on the base.

The Bio-Bracket also has many advantages. The first is that it is made of PLA plastic, which biodegrades into polylactic acid, which is an environmentally safe compound. The design can also be additively manufactured, which will save on the time needed to manufacture such a bracket, and will also not waste any material. The third advantage of the design is the fact that it is only one piece, thus no assembly is required and the design may be put to use immediately after being manufactured.

Summary and Conclusion

During the process of engineering design, the Bio-Bracket is proved to be the best design features. It includes the advanced table retention system as well as simple-snap operation. The Bracket is made of PLA plastic which is not only a cheap and low density material, but also a environmentally friendly material. It is duable based on our vibration test in Solidworks and it can be additively manufactured with ease. All in all, The Bio-Bracket is durable, environmentally friendly (biodegradable), and versatile.

Powerpoint Presentation

PDF File:

http://personal.psu.edu/nfl5059/Team_4_Project_Presentation.pdf

Brochure

PDF File:

http://personal.psu.edu/nfl5059/Team_4_Brochure.pdf

Acknowledgements

This project could not have been done without the guidance of Professor Xinli. Thanks to the knowledge he provided through the Engineering Design 100 course, Team 4 successfully completed this project and various other design ventures. Team 4 would also like to thank Lockheed Martin and the Penn State College of Engineering for providing the facilities and equipment that allowed us to complete this project.

References

7-Port USB 2 Hub. (n.d.). Retrieved April 10, 2016, from http://us.dlink.com/products/connect/7-port-usb-2-hub/

O Martin, L. (2001, April 6). Poly(lactic acid): Plasticization and properties of biodegradable multiphase systems. Retrieved April 20, 2016, from http://www.sciencedirect.com/science/article/pii/S0032386101000866

What material should I use for 3D printing? | 3D Printing for Beginners. (2013, February 10). Retrieved April 10, 2016, from http://3dprintingforbeginners.com/filamentprimer-2/