TEAM 4
Project 1 Presentation: Coffee Mug for People with One-Finger Disability

By: Anna French, Theodore Graham, Jake Johnsen, Gregorius Pradipta

Supervised By: Junfeng Ma
10/08/2015

Background

- Wide array of people who might need assistance in holding and drinking out of a mug
  - Partial hand amputees
  - Those with birth defects
  - The elderly

Purpose

To create a

- reasonable, realistic solution to produce a coffee mug for people with one-fingered disabilities
- product useful to those with other disabilities
- product to improve the everyday lives of people who could benefit from the mug

Mission Statement

Description: A mug that can easily be used by a person with a hand with one finger

Business Goals:

- Make a product marketable to individuals with the disability of one finger
- Make the product cost efficient while achieving a 20% gross margin
- Work toward attaining a 30% share of the disabled drinking container market within one year

Primary Markets:

People who each have only one finger

Secondary Markets:

People who each have only one hand, only a few fingers or people with all fingers

Assumptions:

- Able to function when a person uses it with one hand
- Not easily spillable

Stakeholders:

- Person with one finger
- Caretaker
- Family
- Sales force
- Service center
- Production
- Legal Department
- Person without disabilities
- Person with only a few fingers
- Other people who have other types of disabilities

ANALYTICAL HIERARCHY PROCESS

With the AHP, we ranked all the first and second layer attributes

DURABILITY	Shatter Resistant	Microwave Safe	Dishwasher Safe	Ability to contain variety of beverages	Total	Weight	Total Weight
Shatter Resistant	1	4	5	2	12	0.511727079	0.097305
Microwave Safe	0.25	1	2	0.5	3.75	0.159914712	0.030408
Dishwasher Safe	0.2	0.5	1	0.5	2.2	0.093816631	0.017839
Ability to contain variety of beverages	0.5	2	2	1	5.5	0.234541578	0.044598
				Total	23.45		

SAFETY	Easy/safe to pick up	Easy/safe storage	Suitable size to lift for use	Total	Weight	Total Weight
Easy/safe to pick up	1	5	1	7	0.51725412	0.204907218
Easy/safe storage	0.2	1	0.333	1.533	0.113278652	0.044874681
Suitable size to lift for use	1	3	1	5	0.369467228	0.146362298
			Total	13.533		

Design Process

- Concept Collection and Ranking
  - We first determined the five first layer attributes that customers would want
    - Durability
    - Safety
    - Comfort
    - Insulation
    - Appearance

Customer Needs Hierarchy

1. **Durability (0.190149):**
   - 1.1 Shatter resistant(0.511727079;0.097305)
   - 1.2 Microwave safe (0.159914712;0.030408)
   - 1.3 Dishwasher safe (0.093816631;0.017839)
   - 1.4 Ability to contain a variety of beverages (0.234541578;0.044598)

2. **Safety (0.396144):**
   - 2.1 Easy/safe to pick up (0.51725412;0.204907218)
   - 2.2 Easy/safe storage (0.113278652;0.044874681)
   - 2.3 Suitable size to lift for use (0.369467228;0.146362298)

3. **Comfort (0.193662):**
   - 3.1 Suitable size to hold in hands for extended period of time (0.096429;0.018675)
   - 3.2 Dense outer layer for user protection from mug contents (0.130552;0.025277)
   - 3.3 Lightweight for regular mobility (0.255738;0.049527)
   - 3.4 Easy to clean (0.109216;0.021151)
   - 3.5 Low maintenance (0.101224;0.019603)
   - 3.6 Easy to fill (0.255738;0.049527)
   - 3.7 Fairly simple design (0.051132;0.009902)

4. **Insulation (0.136432):**
   - 4.1 Can withstand a variety of both high and low temperatures (0.5;0.068216031)
   - 4.2 Keeps liquid hot for a sufficient amount of time (0.5;0.068216031)

5. **Appearance (0.083613):**
   - 5.1 Unique, yet attractive structure (0.308824438;0.025821687)
   - 5.2 Resembles regular coffee mug in shape (0.16176224;0.0135254)
   - 5.3 Colors and designs for visual appeal (0.528413322;0.044265749)

COMFORT	Suitable size to hold for extended time	Dense outer layer for protection	Lightweight for regular mobility	Easy to clean	Low Maintenance	Easy to Fill	Fairly simple design	Total	Weight	Total Weight
Suitable size to hold for extended time	1	3	0.2	0.5	1	0.333	5	6.033	0.096429	0.018675
Dense outer layer for protection	0.333	1	0.333	1	2	0.5	3	8.166	0.130522	0.025277
Lightweight for regular mobility	5	3	1	1	2	1	3	16	0.255738	0.049527
Easy to clean	2	1	1	1	0.5	0.333	1	6.833	0.109216	0.021151
Low Maintenance	1	0.5	0.5	2	1	0.333	1	6.333	0.101224	0.019603
Easy to Fill	3	2	1	3	3	1	3	16	0.255738	0.049527
Fairly simple design	0.2	0.333	0.333	1	1	0.333	1	3.199	0.051132	0.009902
							Total	62.564		

APPEARANCE	Unique but Attractive Design	Resembles regular coffee mug	Colors and designs for visual appeal	Total	Weight	Total Weight
Unique but Attractive Design	1	2	0.5	3.5	0.308824438	0.025821687
Resembles regular coffee mug	0.5	1	0.3333	1.8333	0.16176224	0.0135254
Colors and designs for visual appeal	2	3	1	6	0.529413322	0.044265749
			Total	11.3333		

INSULATION	Can withstand a variety of both high and low temperatures	Keeps liquid hot for a sufficient amount of time	Total	Weight	Total Weight
Can withstand a variety of both high and low temperatures	1	1	2	0.5	0.068216031
Keeps liquid hot for a sufficient amount of time	1	1	2	0.5	0.068216031
		Total	4		

Concept Generation

- After doing the AHP, we chose five second layer attributes and used them as our Key Consumer Needs, they are:
  - Easy/safe to pick up
  - Shatter resistant
  - Can withstand both high and low temperatures
  - visual appeal
  - Easy to fill
- From this, we generated our concepts that can be seen in this concept generation tree:

Concept Generation Tree

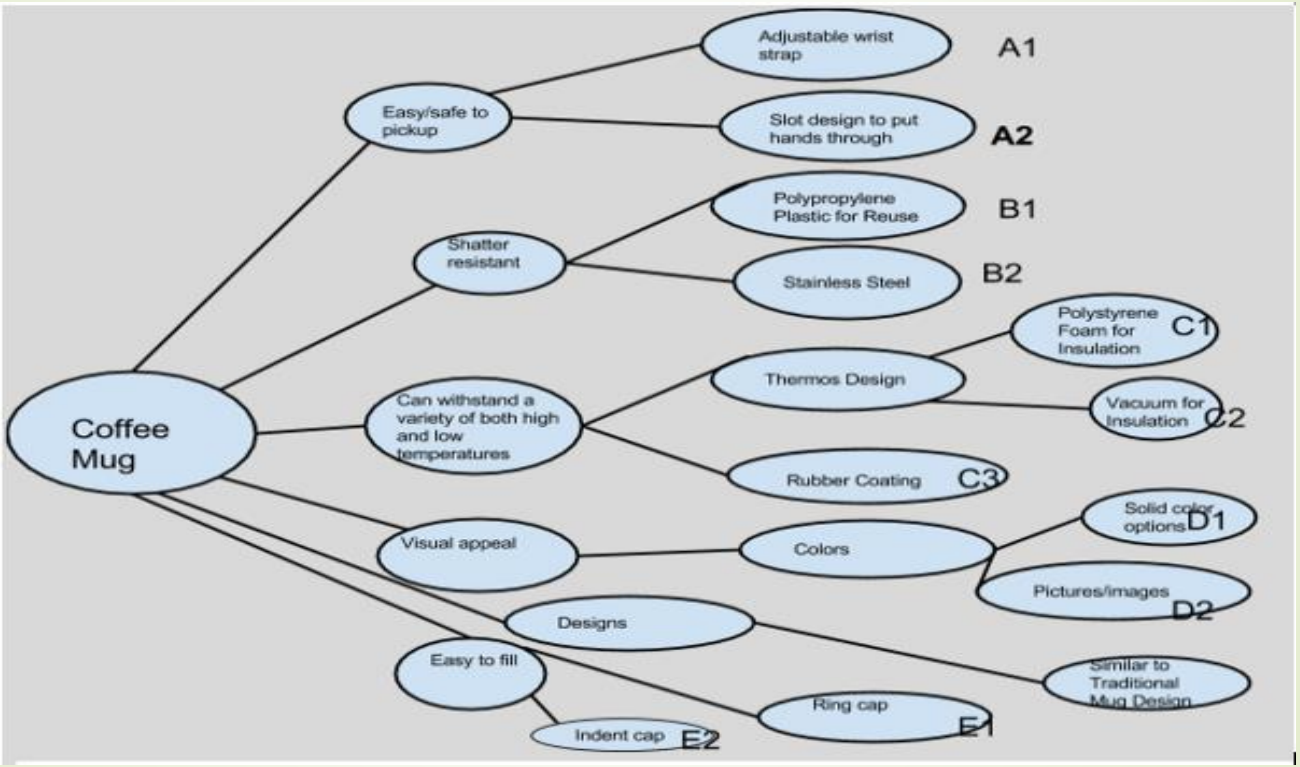

Concept Selection

Using the five key customer concepts as concept selection criteria, we did the concept screening process to narrow down from 15 possible concepts to 5 possible concepts

	Concepts														
Selection Criteria	A1, B1, C2, D1, E1	A1, B2, C2, D1, E1	A1, B1, C1, D1, E2	A1, B2, C1, D1, E1	A1, B1, C1, D2, E2	A2, B1, C2, D1, E1	A2, B2, C2, D1, E1	A2, B1, C1, D1, E2	A2, B1, C1, D2, E1	A2, B2, C1, D2, E1	A2, B2, C2, D2, E1	A1, B1, C2, D2, E1	A2, B2, C2, D2, E2	A1, B1, C1, D1, E1	A2, B1, C3, D1, E1
Easy to Pick up	'+'	+'	+'	+'	+'	0	0	0	0	0	0	+'	0	+'	0
Shatter Resistant	0	-	0	-	0	0	-	0	0	-	-	0	-	0	0
Withstands Temps	+'	+'	-	-	-	+'	+'	-	-	-	+'	+'	+'	-	0
Visual Appeal	0	0	0	0	-	0	0	0	-	-	-	-	-	0	0
Easy to Fill	0	0	-	0	-	0	0	-	0	0	0	0	-	0	0
Total (+)s	2	2	1	1	1	1	1	0	0	0	1	2	1	1	0
Total (-)s	0	1	2	2	3	0	1	2	2	3	2	1	3	1	0
Total Zeros	2	2	2	2	1	4	2	3	3	2	2	2	1	3	5
Net Score	2	1	-1	-1	-2	1	0	-2	-2	-3	-1	1	-2	0	0
Rank	1	2	8	8	11	2	5	11	11	15	8	2	11	5	5
Continue?	Yes	Yes	no	no	no	Yes	no	no	no	no	no	Yes	no	no	yes

Concept Scoring											
Selection Criteria	Weight	Concept									
		A1, B1, C2, D1,E1		A1, B2, C2, D1, E1		A2, B1, C2, D1, E1		A1, B1, C2, D2, E1		A2, B1, C3, D1, E1	
		Rating	Weighted Score	Rating	Weighted Score	Rating	Weighted Score	Rating	Weighted Score	Rating	Weighted Score
Easy to Pick Up	30%	4	1.2	4	1.2	3	0.9	4	1.2	3	0.9
Shatter Resistant	20%	3	0.6	2	0.4	3	0.6	3	0.6	3	0.6
Withstands Temps	25%	5	1.25	5	1.25	5	1.25	5	1.25	3	0.75
Visual Appeal	5%	3	0.15	3	0.15	3	0.15	2	0.1	3	0.15
Easy to Fill	20%	3	0.6	3	0.6	3	0.6	3	0.6	3	0.6
Total Score			3.8		3.6		3.5		3.75		3
Rank			1		3		4		2		5
Continue?			Develop		no		no		no		no

Using the concept scoring table, we selected our top ranking concept to be developed

Final Concept

The concept that we decided to develop is A1B1C2D1E1, which is a mug with:

- An adjustable wrist strap made of velcro for ease of holding
- Polypropylene body for lightweight and durability
- Vacuum space for insulation
- A solid color design for visual appeal
- A ring cap/lid to prevent spills and for travel purposes

Prototyping

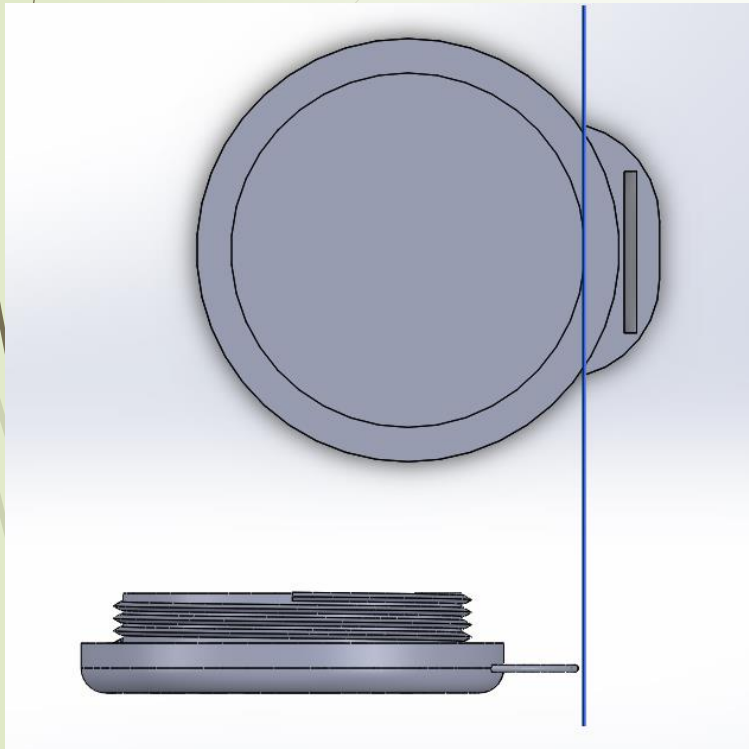

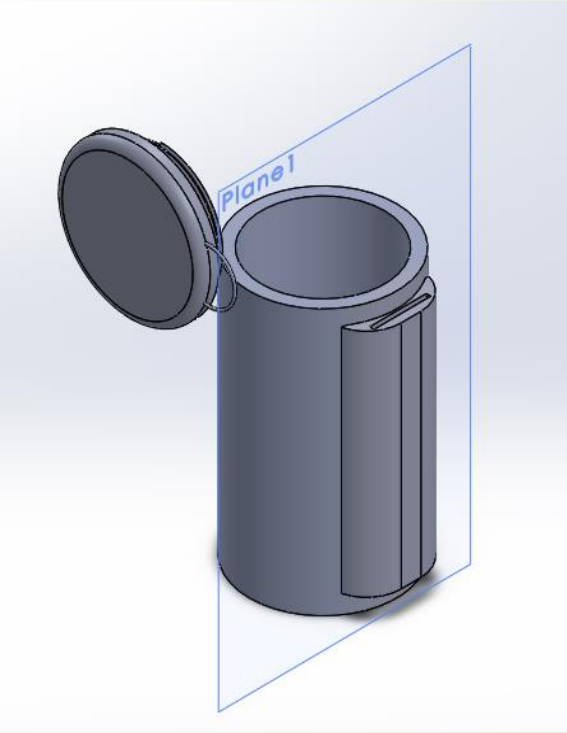

Difficulties

- New process
- Conflicting ideas
- Communication issues
- Solidworks issues
- Redesigning

- Design process
- Logistics of creating a new product
- Solidworks skills improved
- Problem solving
- Teamwork abilities
- Engineering skills

Questions?