Design Project I: Coffee Cup for the People with One-Finger Hand Disabilities

In Engineering Design 100, students are put into groups to design and produce a prototype of a solution to a problem. In our first design project, we were faced with the problem of developing a coffee mug for people with hand disabilities, more specifically people with only one finger on one or both of their hands. This project is done to develop a mug that will help a daily task, such as drinking coffee, a lot easier for people with these disabilities.

DESIGN PROCESS

- To develop a solution in this project, we used the Engineering Design process. This process starts with determining key consumer needs. Then, we used these key consumer needs to develop second-layer attributes.
- These key consumer needs and second-layer attributes are then ranked by comparing the importance of one attribute to another. This method is called the Analytical Hierarchy Process (AHP) and using this method we were able to weigh the importance of each attribute. Below is an example of an AHP chart.

DURABILITY	Shatter Resistant	Microwave Safe	Dishwasher Safe	Ability to contain variety of beverages	Total	Weight	Total Weight
Shatter Resistant	1	4	5	2	12	0.511727079	0.097305
Microwave Safe	0.25	1	2	0.5	3.75	0.159914712	0.030408
Dishwasher Safe	0.2	0.5	1	0.5	2.2	0.093816631	0.017839
Ability to contain variety of beverages	0.5	2	2	1	5.5	0.234541578	0.044598
				Total	23.45		

- After using the AHP, we chose five concepts to use as a base to make concepts of the solutions for the problem. These possible solutions are classified using the Concept Generation Tree. Below is an example of a concept generation tree:

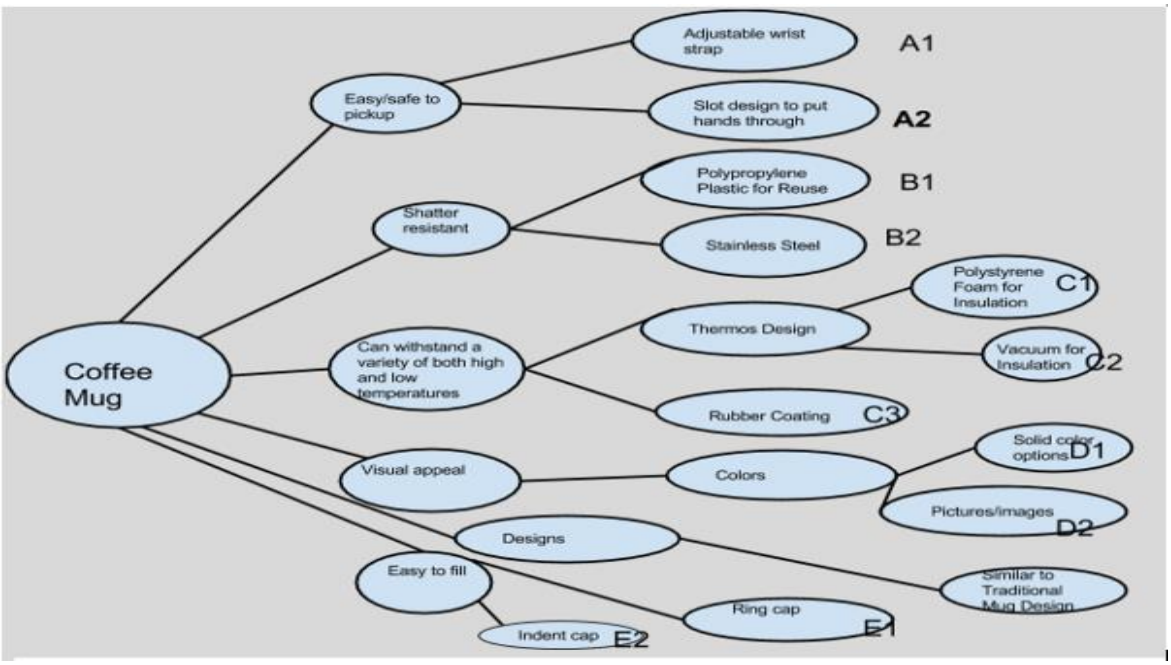

- Then, using the five concepts that were chosen previously as a selection criteria, we used a method called Concept Selection to choose the appropriate solution by comparing possible concepts to a reference concept as a comparison. Below is an example of a concept selection chart:

Concept Scoring											
Selection Criteria	Weight	Concept									
		A1, B1, C2, D1,E1		A1, B2, C2, D1, E1		A2, B1, C2, D1, E1		A1, B1, C2, D2, E1		A2, B1, C3, D1, E1	
		Rating	Weighted Score	Rating	Weighted Score	Rating	Weighted Score	Rating	Weighted Score	Rating	Weighted Score
Easy to Pick Up	30%	4	1.2	4	1.2	3	0.9	4	1.2	3	0.9
Shatter Resistant	20%	3	0.6	2	0.4	3	0.6	3	0.6	3	0.6
Withstands Temps	25%	5	1.25	5	1.25	5	1.25	5	1.25	3	0.75
Visual Appeal	5%	3	0.15	3	0.15	3	0.15	2	0.1	3	0.15
Easy to Fill	20%	3	0.6	3	0.6	3	0.6	3	0.6	3	0.6
Total Score			3.8		3.6		3.5		3.75		3
Rank			1		3		4		2		5
Continue?			Develop		no		no		no		no
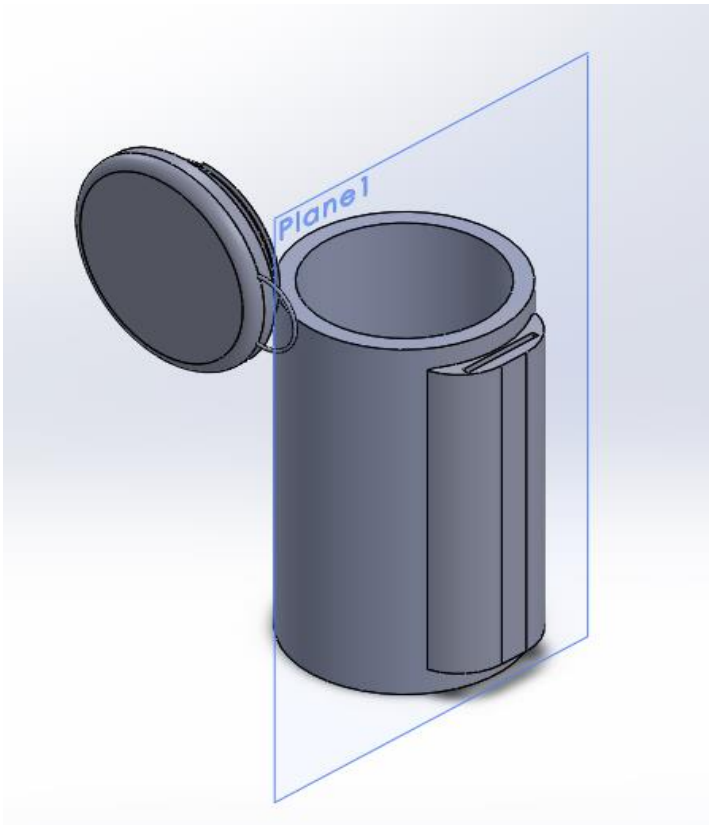
- After selecting the possible solution, the next step was to communicate the solution to the public and develop a prototype. The prototype is then tested and then reevaluated for further improvements.
- By this point, the design process is finished and the only thing remaining to do is to market the product. Below is an image of our finished project.