CAD (Computer Aided Design)

In Engineering Design 100, we learned CAD or computer aided design by using the powerful software, Solidworks. Computer-aided design is a fundamental skill for many engineering majors, especially mechanical and industrial engineering.

In E-Design 100, the basics of CAD was covered. These basics include:

1. Designing parts
   - ➔ A complex object consists of many parts. A part is the simplest component of an object. Below is an example of a lamp shade, which is a part of a lamp

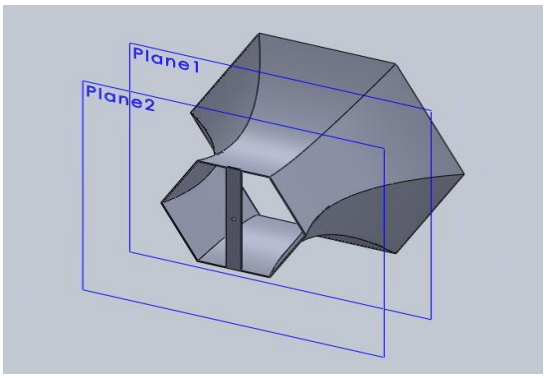

2. Making complex object by using assemblies
   - ➔ Assemblies are groups of parts that are mated together to form a complex object. A 'mate' is the relation between one part and another. There are many types of mates such as perpendicular, concentric, and many other. Below is an example of the assembled lamp on a table

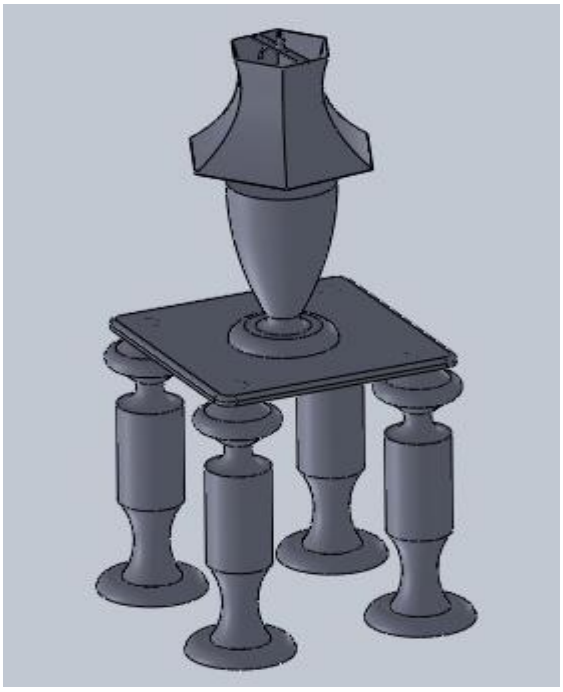

3. Making a drawing of parts/assemblies

➔ Solidworks can also be used to make an ‘engineering’ drawing of parts or assemblies. The drawing can be in a form of multi-view or an isometric drawing. Below is an example of the drawing of the lamp shade part that was showed above.

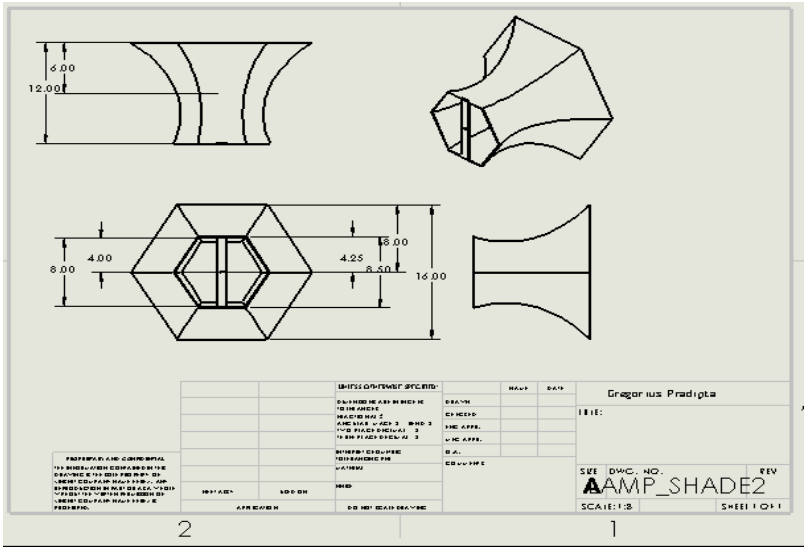

4. **CAD Project**

➔ In Engineering Design 100, each of the students are expected to design an assembly of parts using Solidworks. Students were allowed to design anything as long as it follows all the guidelines that was given. The assembly was supposed to contain at least ten parts and at least five mates. Below is an assembly of my project.

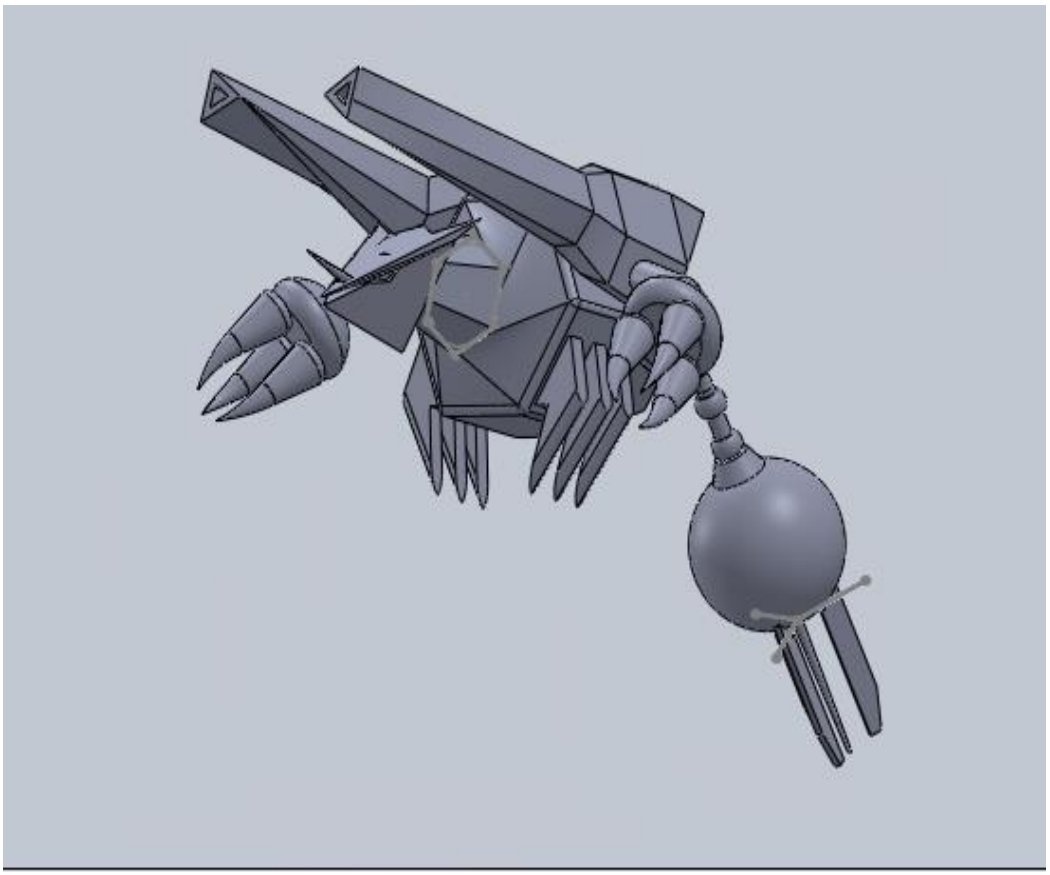

As it was mentioned above. Computer-Aided Design is extremely important for engineers and it was fundamental to learn for future engineers