Conserving mass, momentum, and **ALUMINUM**

Elaina Ripepi
ezr5050@psu.edu
College of Engineering
Pennsylvania State University
EDSGN100 FALL2012

Engineers are taught the laws of conservation. The laws are enforced in both chemistry and physics. Being well-educated on the laws of conservation plays an important role in succeeding in these courses. In addition to conserving things such as mass and momentum, engineers, along with everyone else, have the opportunity to conserve resources. I am personally a huge advocate for recycling. The number of recyclable products is endless. From plastic bottles to old cell phones, nearly everything is reusable. However, for my CAD design project, I chose to focus on the aluminum can.

Aluminum cans are used by many drink manufacturing companies. The most common companies that use aluminum cans produce soda and beer. The labels of these cans vary, but the overall design remains the same. Aluminum cans are cylindrical in shape and very thin. In fact, the sides of a can are about the thickness of a piece of human hair, 1/1000 of an inch. Although some cans are skinnier than others, I chose to recreate the standard soda can. Below are some pictures I referenced off of when creating my CAD project.

Sources: http://www.primitiveways.com/Fire%20Making%20Using%20Solar%20Power.html
http://www.123rf.com/photo_7897897_render-of-different-views-of-an-aluminum-can-over-white.html
http://www.oocities.org/wmuma@rogers.com/cccb.html

Creating an aluminum can in solid works provided me with several challenges. At the beginning, I had trouble figuring out how to create the overall structure of the can. I first attempted extruding the figure from multiple circle bases and then attempted lofting the structure. Although both approaches are possible, they became increasingly difficult. Instead, I chose to draw one side of the figure and revolve around this side. I shelled out my cylindrical can and then produced the domed bottom. The domed bottom took me several attempts as well. Additionally, the tab on the top of the can was difficult to create. I had never used the three-point-curve tool on Solid Works before. Even though the project caused several obstacles, I enjoyed building the can. I had fun using my problem solving skills in order to decide the most efficient way to create the can. I also found that my trial and error skills were very important as well. Overall, I learned the importance of patience, focus, and innovative thinking. Here is my final product:

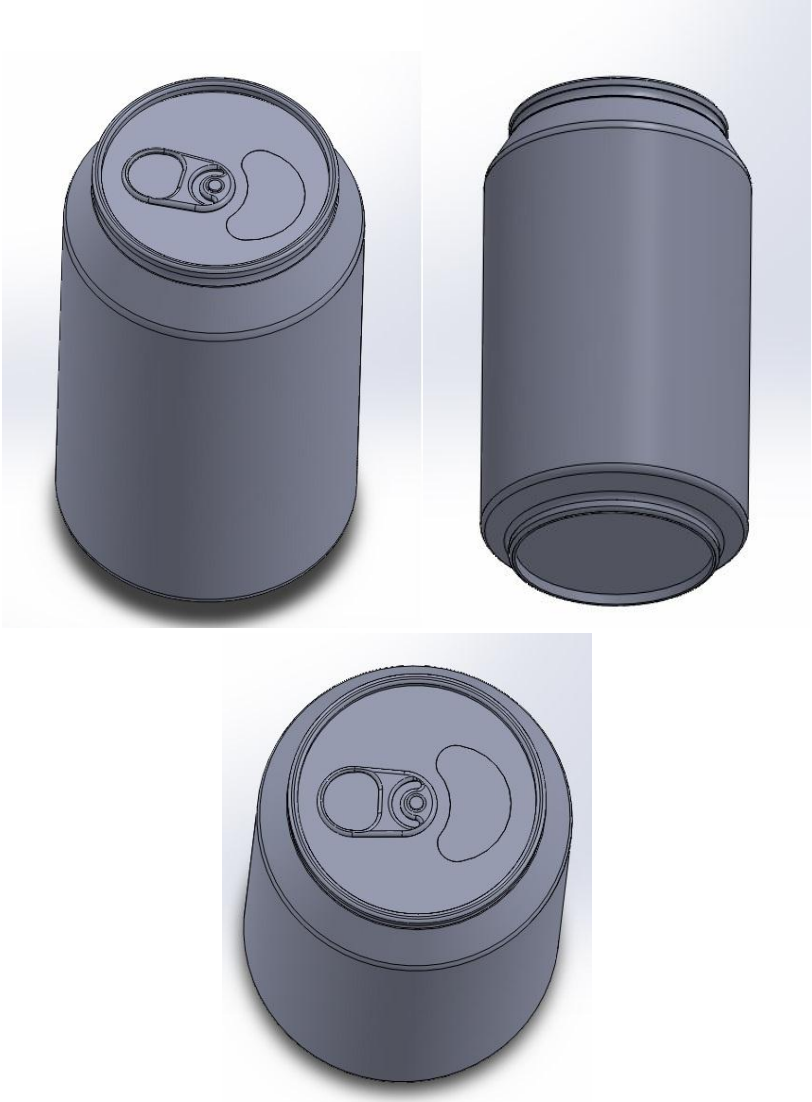

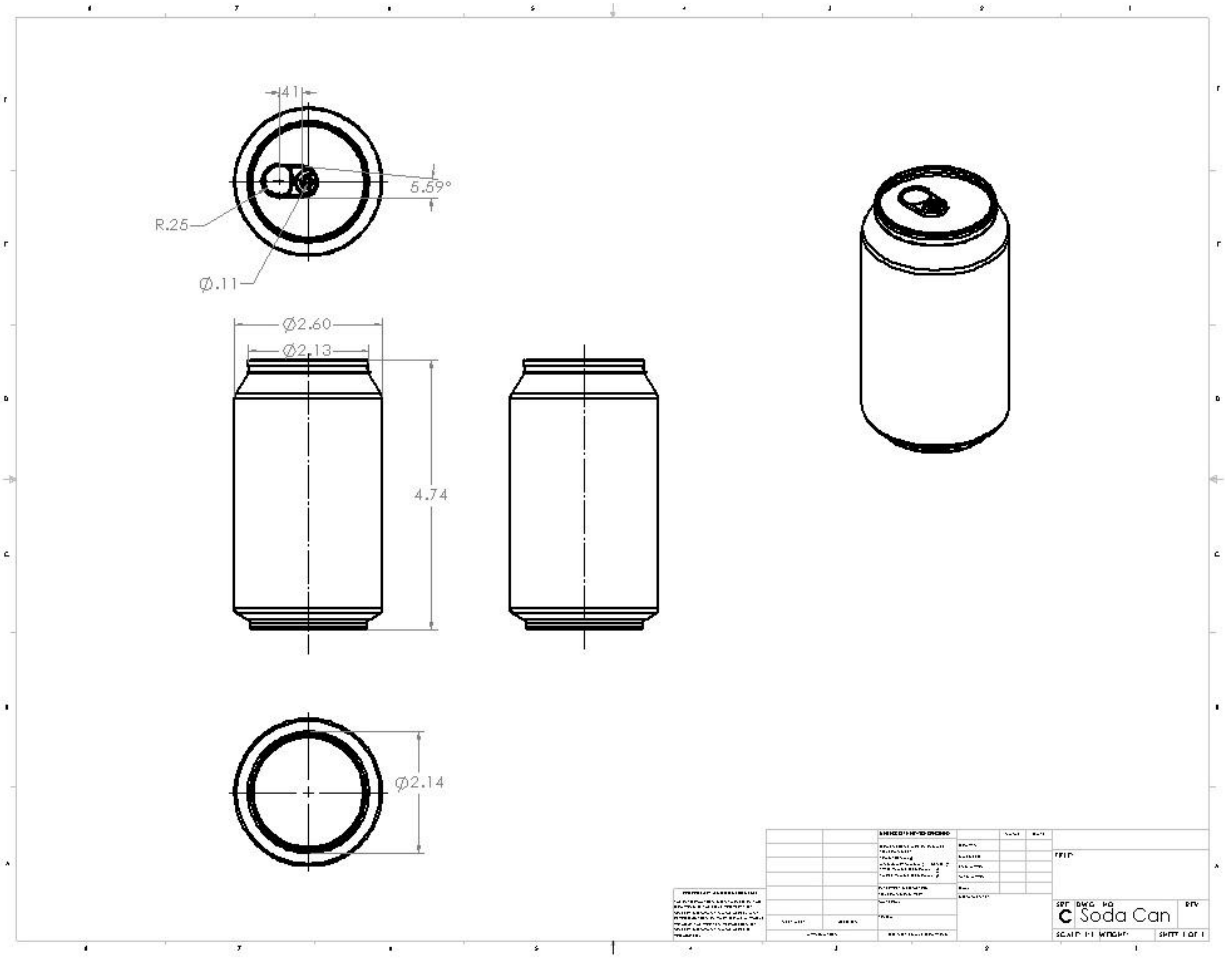
.41
5.59°
R.25
Ø.11
Ø2.60
Ø2.13
4.74
Ø2.14
Soda Can

Why did I choose to recreate an aluminum can over a plastic bottle or another recycled object? There are two main reasons. First, my dad works for ALCOA, an aluminum company. Throughout my childhood and teen years, I have had the opportunity to see the process of aluminum cans being manufactured. I have always been a "daddy's girl" and going to work with my father sparked my interest in being an engineer. Ever since, I have grown passionate about math, science, and recycling aluminum cans. I am such a huge advocate that my high school friends constantly made fun of me, bringing me to my second reason. During my senior year of high school, my A.P. physics class built an eight foot tall Christmas tree out of recycled aluminum cans. I had come up with the idea to build the tree for a Holiday Door Decorating Contest. My dad had emailed me a link with a video of ALCOA workers building an aluminum can tree several months prior. Although I thought the video was entertaining to watch, I underestimated the time and effort it would take to construct the recycled tree. I failed to take into account that the video was time-lapsed. As a result, the recycled can tree took several of my classmates and I 50+ hours of hard work. The project was very tedious. There were many times in which my classmates wanted to give up. As the passionate recycler, I ensured them their hard work would pay off and encouraged them to keep building. The resulting aluminum Christmas tree was well worth the endless hours of hard work. Not only did my class win the Holiday Door Decorating Contest, but I finally proved to my high school friends that recycling is valuable and rewarding.