CAD Lab

In Engineering Design 100 at Penn State I used SolidWorks to build and prototype objects for projects. I utilized techniques such as extrude, extrude cut, shell, loft, revolve, sweep, and fillet to create parts in SolidWorks. I also used techniques such as reference geometry to create more elaborate objects. I used different types of mating such as coinciding, tangent, and concentric in assembly projects to create more complex items.

Below are examples of SolidWorks assembly files I created in Engineering Design 100 for in-class and individual projects.

Espresso Pot: This item was assembled from seven different parts. SolidWorks techniques used to make the components of this item include extrude, loft, sweep, revolve, extrude cut, reference geometry, and more. For this particular project, I drafted and created all object dimensions and requirements by myself as my individual final project.

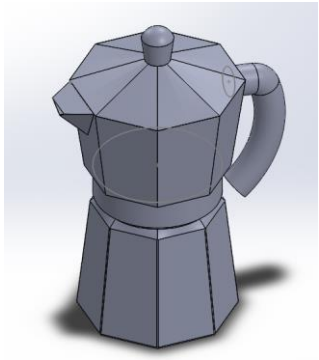
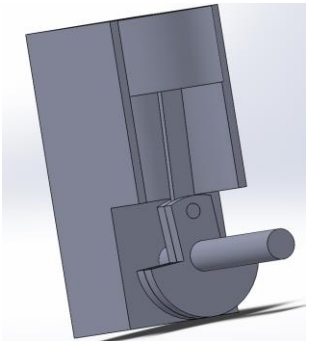
Simple Machine: This item was assembled from four different parts and can be cranked to move the components in SolidWorks. This project relied heavily on how the components were mated in the assembly file in order for the machine to work. I used mating techniques such as coincident, parallel, and concentric for this assembly.