Solid Modeling

With Acknowledgement to Junfeng Ma

This courses covered introductory concepts for solid modeling.

Topics:

Extrusion Shelling Filleting, Chamfering Dimensioning
Assembling Parts Isometrics Views Section Views Revolve
Sweeping profiles along curves Lofting Feature patterns
Animation Rendering

Basic definitions:

Axis: An implied centerline that runs through every cylindrical feature.
Plane: A flat 2D surface on which 2D profile sketches are drawn.
Origin: The point where the three default reference planes intersect. The coordinates of the origin are: (x=0, y=0, z=0).
Face: The surface or skin of a part. Faces can be flat or curved.
Edge: The boundary of a face. Edges can be straight or curved.
Vertex: The corner where edges meet.
Standards: Standards are sets of rules that govern how technical drawings are represented. American National Standards Institute (ANSI) is the governing body that sets standards for engineering drawings in the U.S.
Conventions: They are commonly accepted methods or practices.

Extrusion

- Extrusion is a sketched feature. It requires sketching a 2D profile on a plane and then extruding the sketch perpendicular to the plane.

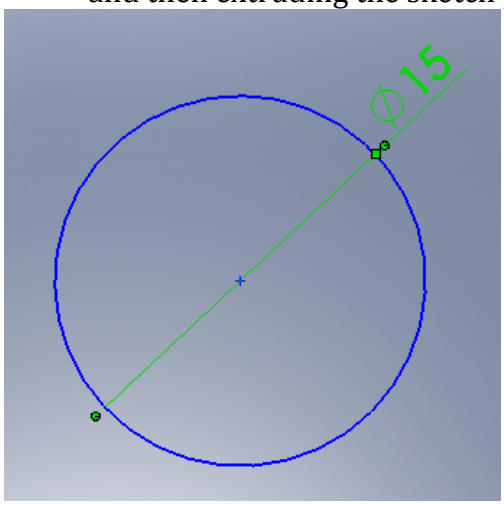

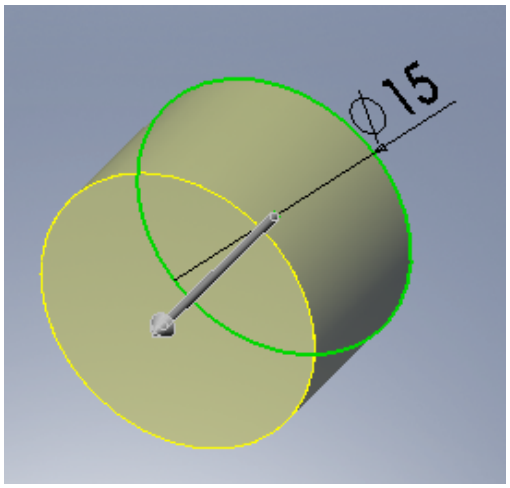

Shell

- Shell is an operation feature, which removes material from the selected face.
- Creates a hollow interior for the selected solid.
- Shell feature requires specifying the wall thickness.

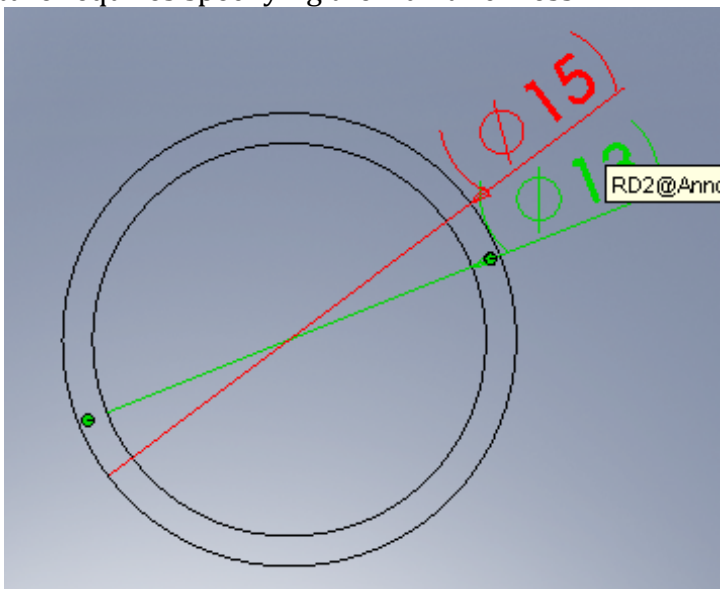

Fillet

- Fillet is an operation feature.
- Used to round sharp edges and faces of a part.
- It can remove or add material.
- Convex fillet - applied for an outside edge and it removes material;
- Concave fillet - applied for an inside edge and adds material.
- Fillet feature requires specifying a radius. For the coffee cup a radius of .1 in is used.

Filleted Edges

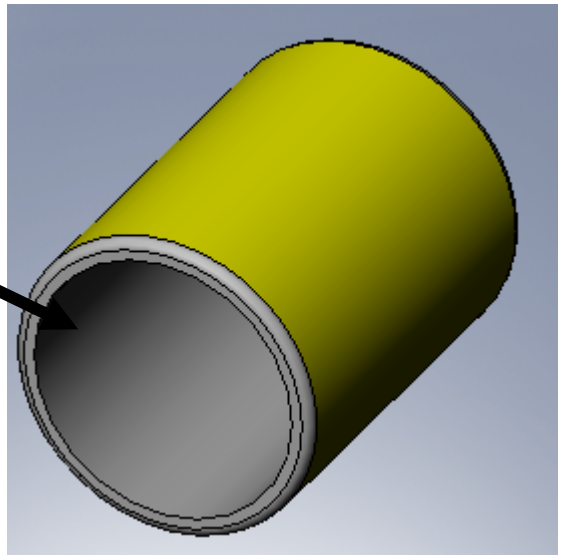

Examples:
Switch Plate

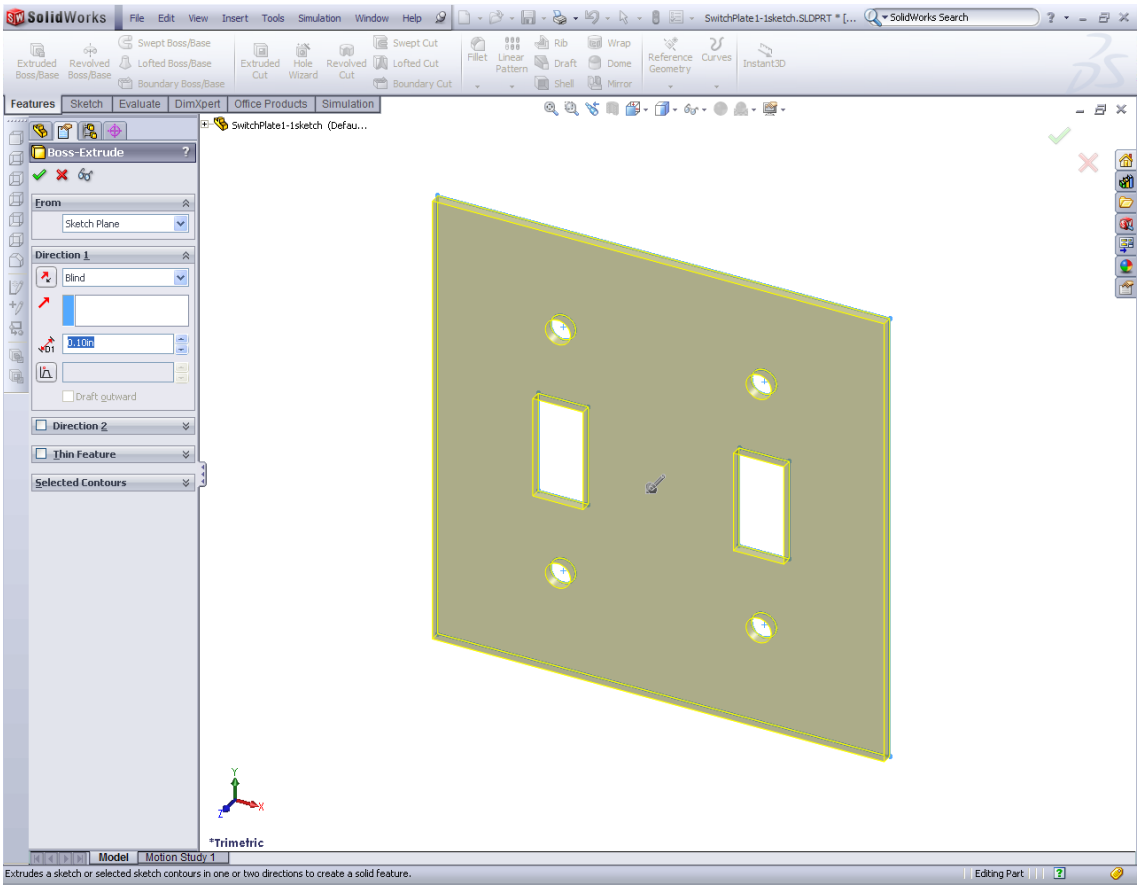

Revolve:

- Revolve is a sketched feature.
- To complete a revolved base one needs to sketch a 2D profile and sketch a centerline or axis around which the 2D profile will be revolved.
- Angle of rotation should be specified.

Step 1: Revolve Axis

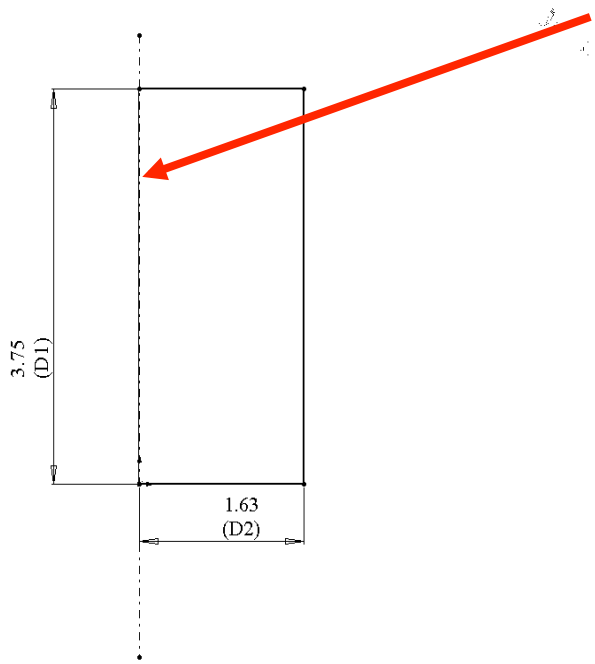

Step 2: rotate 360 degrees

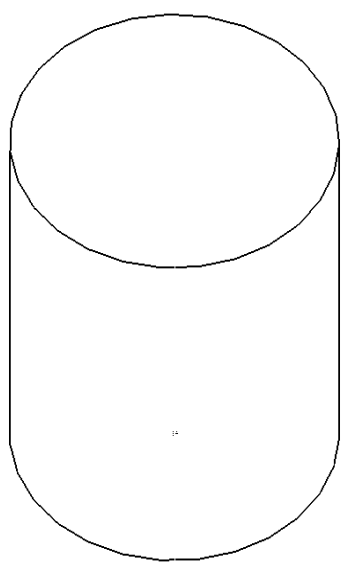

Sweep:

- Sweep is created by moving a 2D profile along a path.
- The sweep feature requires two sketches:
- (1) sweep path, and
- (2) sweep section (profile).
- Some important rules to remember when creating a swept feature are:
- 1) The sweep path is a set of sketched curves contained in a sketch, a curve, or a set of model edges.
- 2) The sweep profile must be a closed contour.
- 3) The start point of the path must lie on the plane of the sweep section.
- 4) The section, path or the resulting solid cannot be self-intersecting.

1. Sweep Profile

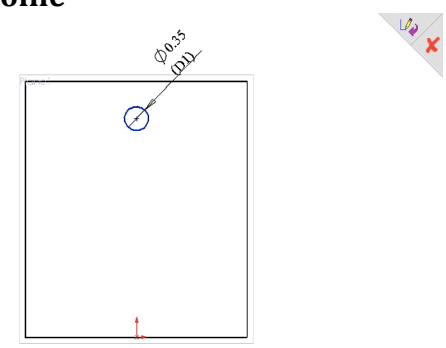

2. Sweep Path

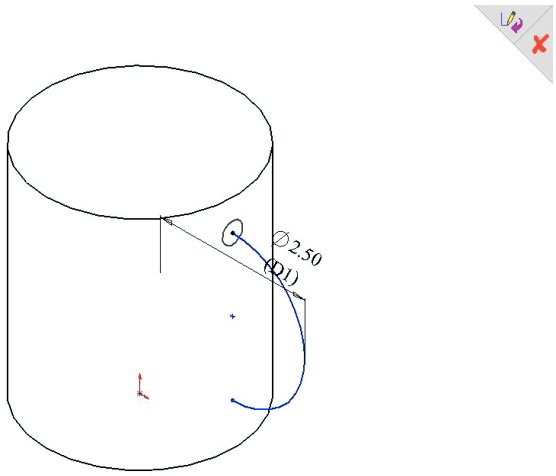

3. Completed Sweep

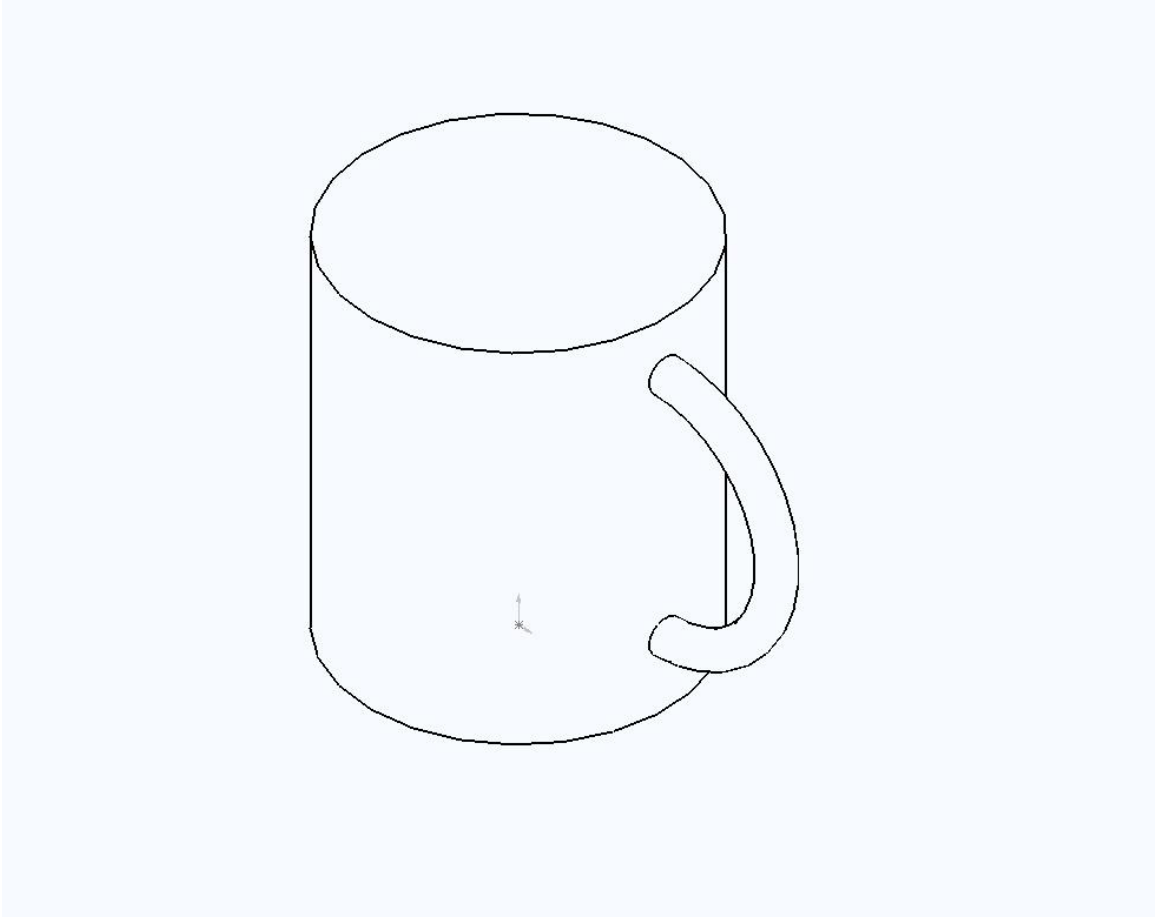

Loft:
Loft feature blends multiple profiles.
A loft feature can be a base, boss or a cut.
To create the loft feature,

1. Create multiple planes required for the profile sketches.
2. Then, a sketch should be completed on each plane.

Example: Bottle

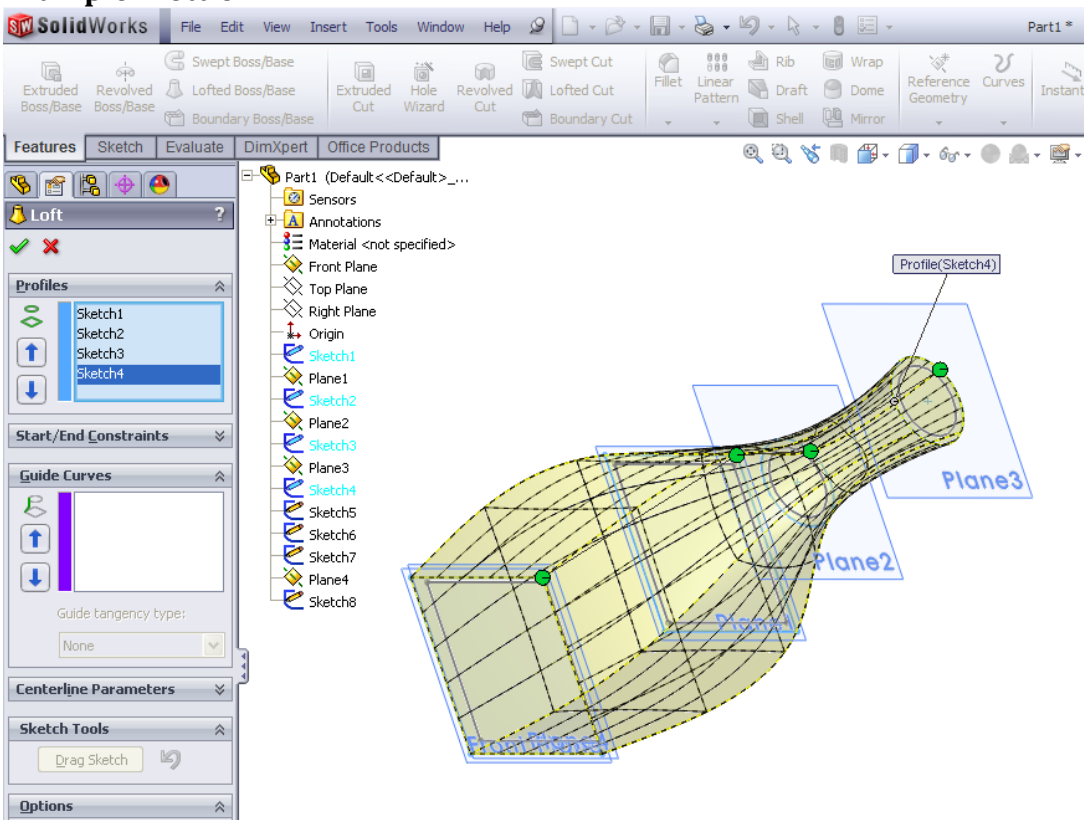

Assembly:

- An assembly contains two or more parts.
- In an assembly, parts are referred to as components.

Changes in the components affect the assembly. Changes in the assembly affect the components

Mates:

- Mating relationships precisely position the components with respect to each other.
- They define how the components move and rotate with respect to other components.

Mates are for limiting the movement in all six degrees of freedom. These are movements along X, Y and Z axes, and rotation around X, Y and Z axes

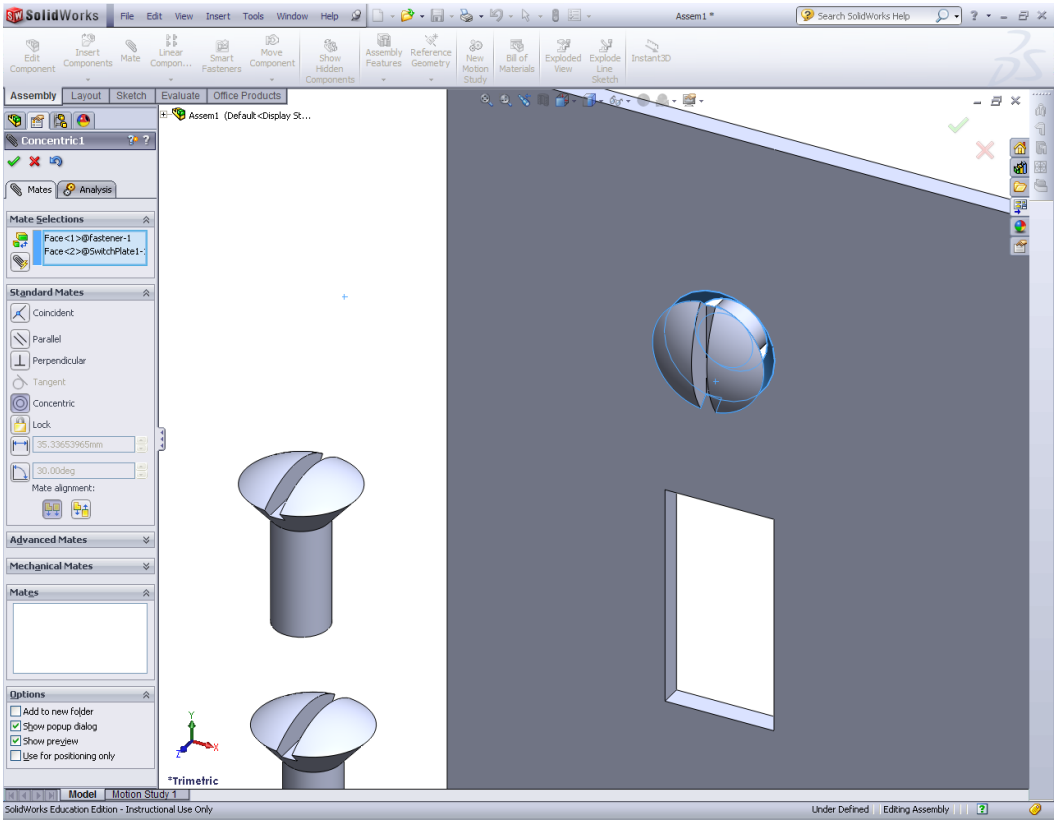
SolidWorks
File Edit View Insert Tools Window Help
Assem1 *
Search SolidWorks Help
Edit Component
Insert Components
Mate
Linear Compon...
Smart Fasteners
Move Component
Show Hidden Components
Assembly Features
Reference Geometry
New Motion Study
Bill of Materials
Exploded View
Explode Line Sketch
Instant3D
Assembly
Layout
Sketch
Evaluate
Office Products
Assem1 (Default <Display St...
Concentric1
Mates
Analysis
Mate Selections
Face<1>@Fastener-1
Face<2>@SwitchPlate1-
Standard Mates
Coincident
Parallel
Perpendicular
Tangent
Concentric
Lock
35.33653965mm
30.00deg
Mate alignment:
Advanced Mates
Mechanical Mates
Mates
Options
Add to new folder
Show popup dialog
Show preview
Use for positioning only
*Trimetric
Model
Motion Study 1
SolidWorks Education Edition - Instructional Use Only
Under Defined
Editing Assembly