Engineering Design Portfolio

Sponsor: Xinli Wu
EDSGN 100
Section 10
Efrain Guzman
April 27, 2016

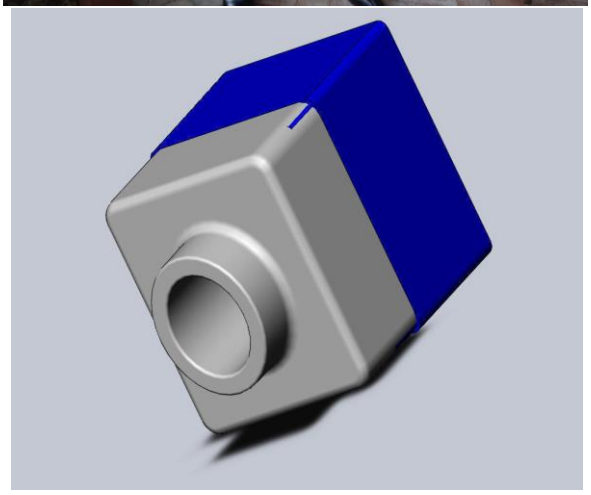

Abstract:

EDSGN 100 gave me opportunity to complete many projects, which will all be displayed throughout the report. All of these projects were mainly focused on daily life struggles that my group had to find solutions to. The project reports are included in my portfolio and will be accompanied by some of my personal information, along with some of my discoveries throughout the course.

Table of Contents

1. Resume……4
2. EDSGN 100 Syllabus……..5-7
3. Practice Problems and Exercises…….7
4. 1st Design Project- Dumpling Maker……8-12
5. 2nd Design Project- USB Hub Bracket…….13-15
6. Summary and Conclusions……..16

Resume:

Efrain Guzman
ekg5132@psu.edu
School Address: 0617 Mifflin, University Park, PA 16802
Permanent Address: 936 Stanbridge St, Norristown, PA 19401
Mobile Phone: (484) 250-2838

Education *Norristown, PA*
Norristown Area High School *Graduation: June 2015*
High School Diploma
GPA: 4.0

LEADERSHIP/ACTIVITIES:

Unidad Latino Leadership Club
2012-2015
President of Unidad

- Organize and oversee a teacher and parent bake sale.
- Oversee other school run events.
- Set a good example for younger students.

Soccer Team Captain
2012-2015
Norristown Soccer Team Captain

- Oversee team practices and games.
- Help coach with team meetings, contact teammates, and managing equipment.
- Being an overall leader for the team.

WORK EXPERIENCE:
Sicilian Delight Pizzeria
2012-2015
Delivery/

- Assist customers.
- Run the register and handle the stores money for the day.
- Ensure the customer has an enjoyable experience and would want to come back.

Shearon Landscaping
2012-2015
Landscaping

- Assist customers.
- Make sure all parts of owner's house are mowed and presentable.
- Other patio improvements.

Syllabus:

The following calendar is the class' syllabus depicted in a day by day basis.

Monday		Wednesday		Friday		
		Room: 316 Hammond		**Room: 306 Hammond**		**Room: 315 Hammond**
January	**11**	•Introduction to the Course EDSGN 100 • Engineering Licensure, PE Violations.Steps to become a P.E.	**13**	Intro. to orthographic projection, sketching, visualization, and multiview drawings	**15**	• Introduction to engineering design process • Intro. to Design Project I • Design Project I – Lab # 1 • Design Thinking.
	18	Martin Luther King Day - No Classes	**20**	Multiview drawings continued	**22**	• Excel spreadsheet application & PowerPoint Presentation • Webpage creating and publishing • Online Design Portfolio
	25	Design Project I -- Lab #2	**27**	• Multiview concluded, scales • Drawing geometry, tangencies • Dimensioning principles	**29**	Introduction to Solid modeling with **Solidworks**: Extrusion, shell and fillet features.
February	**1**	Design Project I – Lab # 3	**3**	Axonometric: Isometric pictorials	**5**	**Solidworks**: Assembly Basics

	8	Design Project I – Lab # 4	**10**	Penn State Library Services and Resources --class meets in Room 329 Hammond--located inside the Engineering Library	**12**	**Solidworks:** Drawings
	15	Design Project I – Lab # 5	**17**	Isometric concluded	**19**	**Solidworks:** Design Tables
	22	Design Project I – Lab # 6	**24**	Exam **I**	**28**	**Solidworks:** Section views
	29	Design Project I – Lab # 7				
March			**2**	Oblique pictorials	**4**	**Solidworks:** Revolves and sweeps
	7	Spring Break - No Classes	**9**	Spring Break - No Classes	**11**	Spring Break - No Classes
	14	**Design Project I Demonstration** Intro. to Design Project II **(Project II Kickoff Meeting:** 6:00-7:00 pm, March 14th, 111 Wartick Building**)**	**16**	Sectioning	**18**	**Solidworks:** Lofting
	21	Design Project II –Lab # 1 **Design Project I - Team Report Due**	**23**	Working drawings	**25**	**Solidworks:** Working Drawings
	28	Design Project II – Lab # 2 Project 2 Time Line	**30**	Engineering Ethics		
April					**1**	• **CAD Quiz** • **CAD Project**

	4	Design Project II – Lab # 3	**6**	Design Project II – Lab # 4 How to submit 3D printing file (**.stl)?	**8**	**CAD Project continued**
	11	Design Project II – Lab # 5	**13**	Design Project II – Lab # 6	**15**	**CAD Project continued**
	18	Design Project II – Lab # 7	**20**	Design Project II documentation (**Prototype Due**)	**22**	**CAD Project Due**
	25	Design Project II - Formal Oral Presentation.(**Project Showcase SPRING 2016 to be held on April 28,** 1-3:30pm, Bryce Jordan Center - Main Arena)	**27**	Design Project II documentation	**29**	**Exam II**

Practice Problems and Exercises:

The class gave me an opportunity to create and solve designs manually. The following are some visuals of problems and exercises completed by myself throughout the semester.

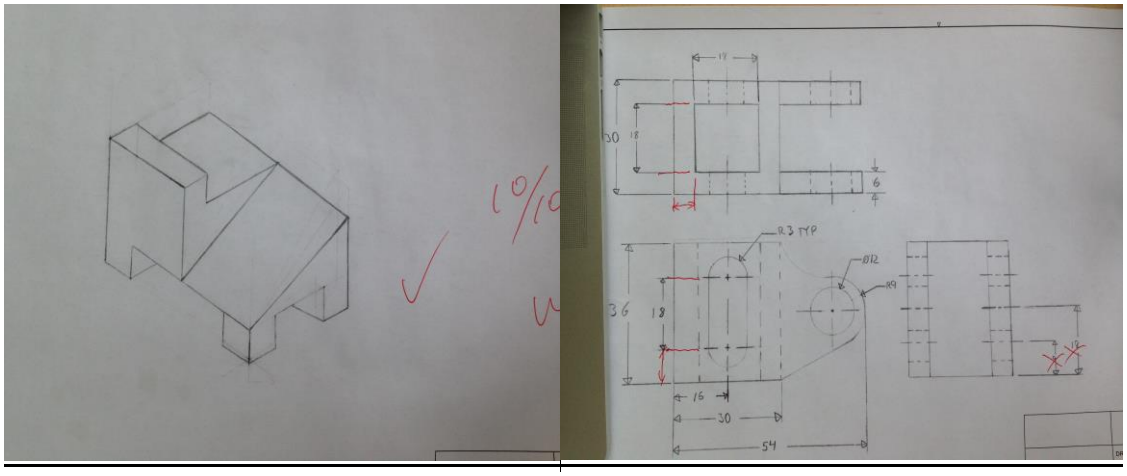

1st Design Project

EDSGN 100 Introduction to Engineering Design Design Project #1: Dumpling Maker

Design Task:
Design and build a prototype of a dumpling maker suitable for use in either a household or a restaurant (backgrounds and some other details will be explained in class).
Design Specifications:

-The dumpling maker should be automatic or semi-automatic.

-The dumpling maker should produce no less than 10 dumplings per minute on average.

-The material cost for the dumpling maker should not exceed $200 unless it can be justified.

-The dumpling maker should be safe as a food processor, easy to maintain, safe to use, and dishwasher safe.

Key Deliverables:

A lab report to be published on the web with the following items included (*Note: Guidelines for the lab report will be given later*):
1. Problem statement
2. Mission statement

3. Customer needs assessment
4. Gantt chart
5. Design approach (concept generation and concept selection with design matrix) 6. Working drawing
7. Prototype (images, scale, operation instruction, etc.)
8. Working mechanism and engineering analysis
9. Cost analysis
10. Conclusion
11. References (if any)
12. Acknowledgement (if any)

Evaluation Criteria:

-Design meets specifications
-Creativity/Innovation
-Working mechanism and operation instruction are clear Ease of operation
-Safe to use
-Cost efficient

Design Pictures:

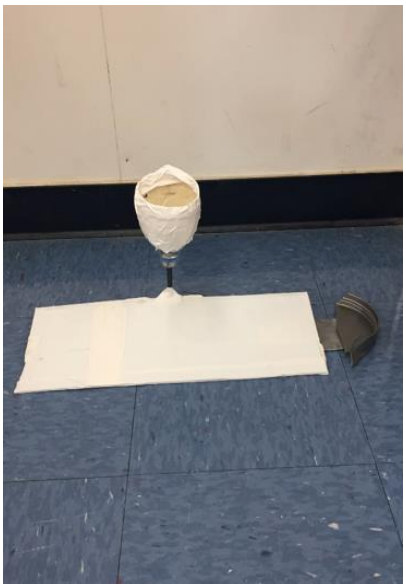

SolidWorks working drawing:

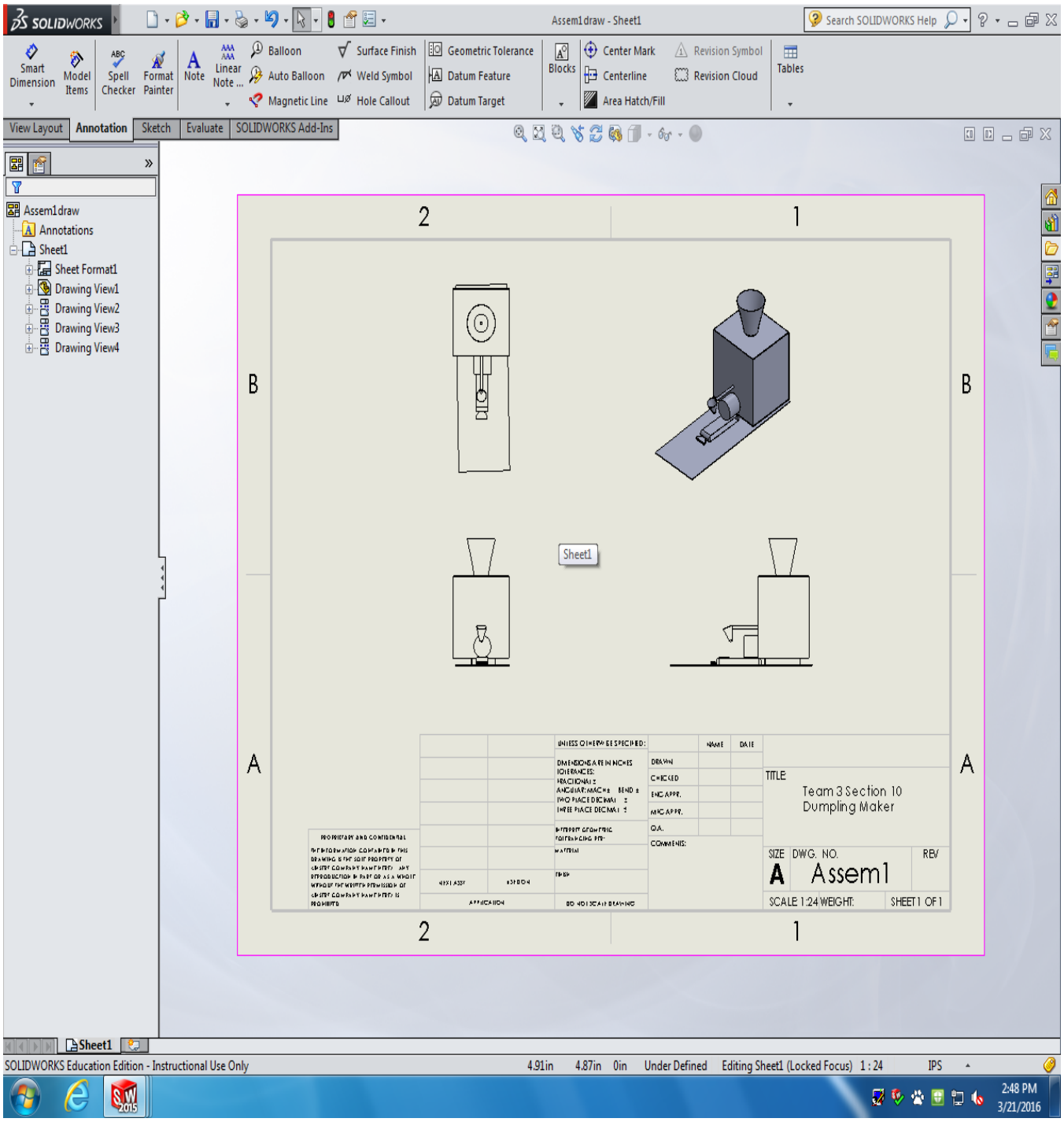

Detail Drawings:

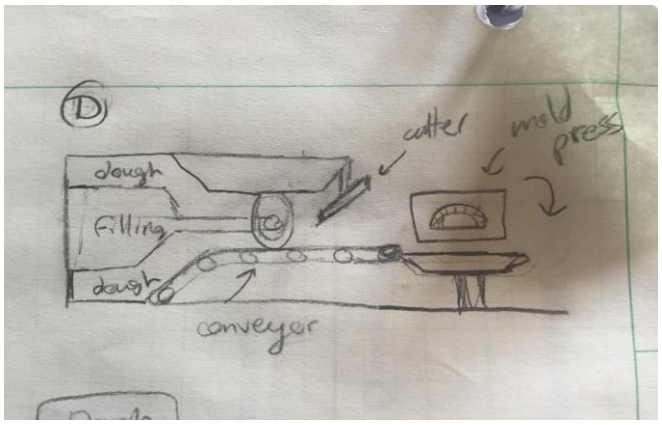

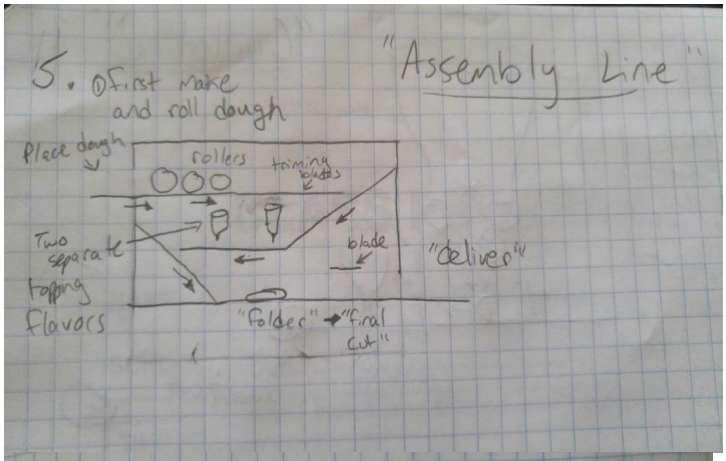

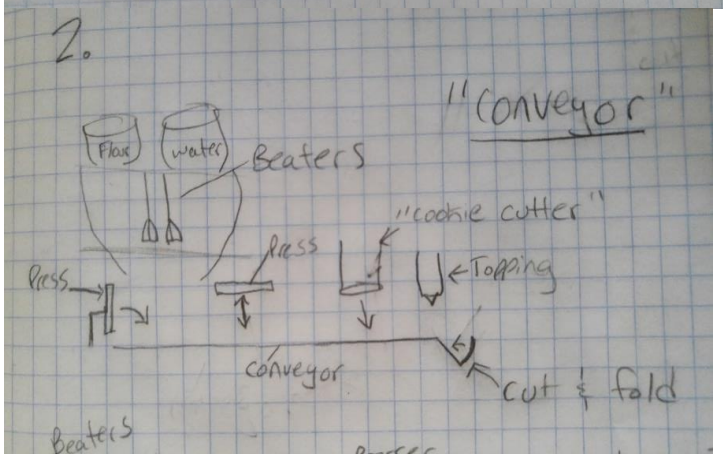

Design Features:

Design Features

Some main features of our design included the dough funnel/mixer, dough rollers, dough shooter, dough cutter (knife), conveyor belt, filling funnel, and dumpling folder.

- Dough funnel/mixer: a funnel shaped mixer that mixes the ingredients for the dough (water and flour).
- Dough rollers: flattened the dough to a reasonable thickness for the dumplings.
- Dough shooter: took the flattened dough and pushed it out the opening of our device leading to the conveyor belt where the knife cut it to dumpling size.
- Dough cutter: a knife that sliced the dough being pushed out by the dough shooter (made it to a reasonable rectangular dumpling size).
- Conveyor belt: transports the cut dough to the filling station.
- filling funnel: a funnel where the fillings of your choice are placed in the center of the rectangular dough.
- Dumpling folder: where the rectangular dough with filling in the center is folded in half to seal the dumpling shape with the filling remaining in the center.

Second Design Project

Project Overview

Leverage additive manufacturing technology to solve new problems or redesign existing solutions. Use additive manufacturing's ability to create geometries that were previously impossible to reduce weight, cost, and assembly time. Improve designs iteratively through rapid prototyping made possible with desktop additive machinery (i.e. MakerBot).

USB Hub Mounting Bracket

- Due to a design requirements change a new USB mounting bracket needs to be designed –From a 4 port hub To a 7 port hub
- From Horizontal mount To Vertical mount –New cable retention for usb cables and
- Power –From single usb hub to stacked 3 high –Environment 0 to +25C
- Must show that new bracket can survive vibration loading

Project 2 3D Model/SolidWorks Model Drawings

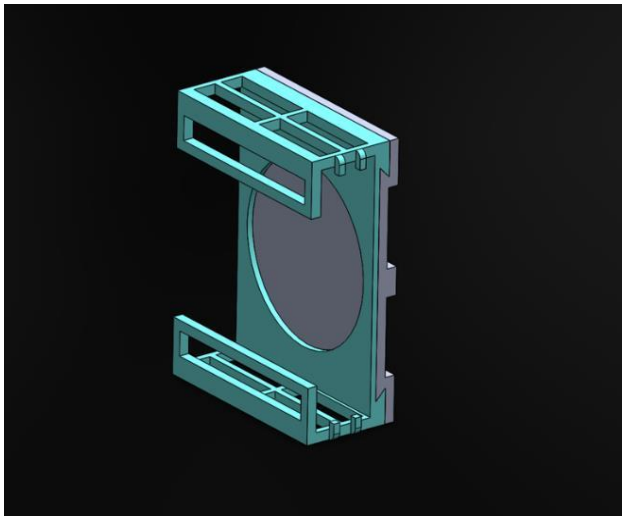

Detail Drawings

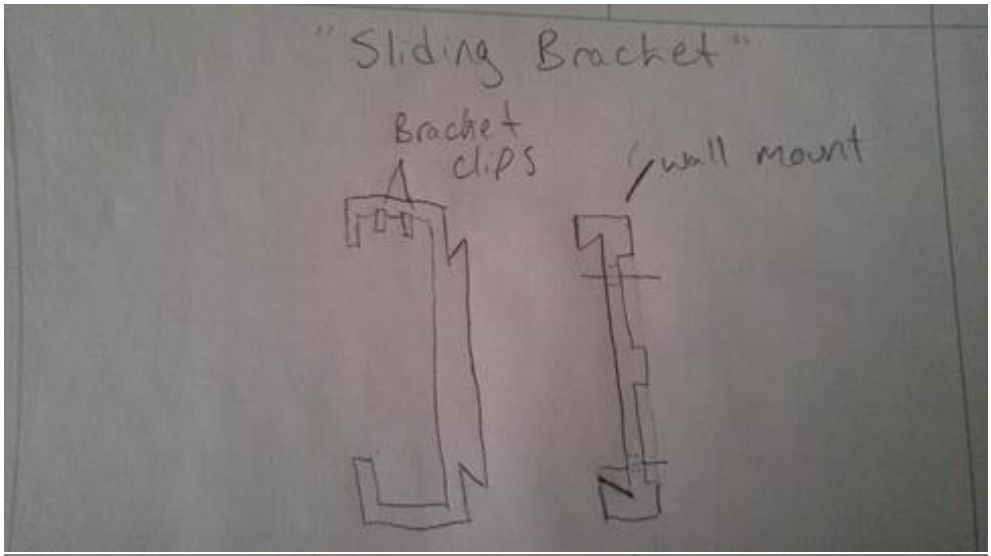

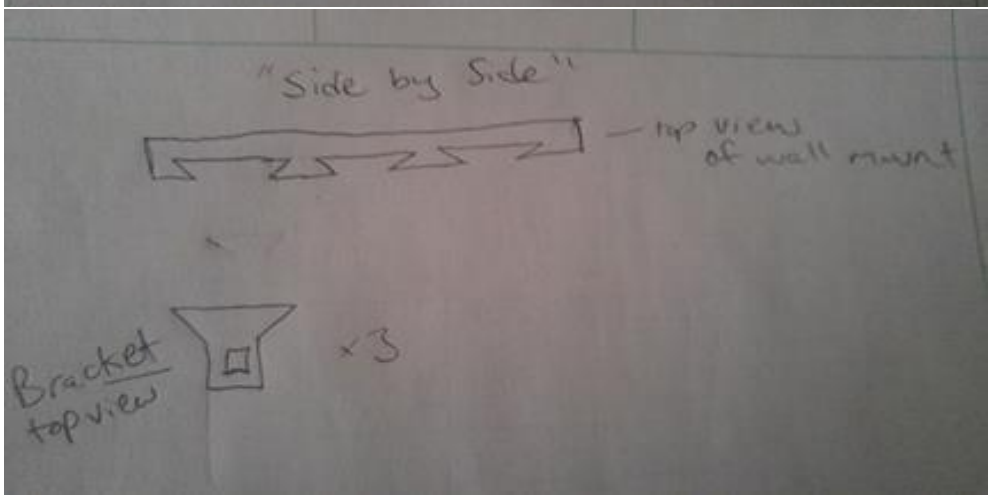

Design Features

Wall Mount: The wall mount is a part that is designed to be the base of the assembly. It has four 1⁄8" screw holes that are for mounting the assembly on a device.

HUB Bracket: The HUB bracket is the part that securely holds the USB HUB in place. This part was designed to protect the USB hub from any vibrations and impacts during avionic missions.

Summary/Conclusion

Engineering Design 100 has been a very interesting class, which has shown me an overview of every single aspect of engineering. During this class I learned many things, which varied from manual drawings to learning how to use SolidWorks. Also, the class did not only teach me about how to approach my work but thought me the ethics behind my work. Overall, I leave this class with much more engineering knowledge than I thought, I would ever acquire.

References and Acknowledgements

It is necessary to thank Professor Xinli Wu for all his help and understanding throughout the semester. It was clear that at the beginning of the semester I was unaware of all the information Dr. Wu had to teach me. However, he never gave up on the class, or me and knew that at the end we would understand the information. Also, I would like to thank Lockheed Martin for my group and me, the opportunity to innovate and improve an already existing product.