Introduction to Engineering Design 100
Lockheed Martin Design Project II
USB HUB Bracket

Section 10 Team 3

Submitted by: Damian Faris, Efrain Guzman, Manuel Vazquez, Matthew Borruso

Submitted to: Xinli Wu

April 27th Spring 2016

Abstract

This report created by Damian Faris, Efrain Guzman, Manuel Vazquez, and Matthew Borusso summarizes the approach, analysis, thought process and execution behind designing a USB HUB bracket to adapt to the new HUB used by Lockheed Martin . Team three's design fully meets the the design requirements set forth by Lockheed Martin.

To email any of our team members click on one of the following links:

Matthew Borruso

Damian Faris

Efrain Guzman

Manuel Vazquez

Table Of Contents

Abstract	Efrain Guzman	...1
Problem/Mission Statement	Damian Faris	...3
Gantt Chart	Manuel Vazquez	...4
Concept Generation	Manuel Vazquez	...5
Design Matrix	Matthew Borruso Damian Faris	...7
Final Design Prototype	Matthew Borruso	...8
Design Features/Engr. Analysis	Damian Faris	...9
Working Drawings	Matthew Borruso	...10
Cost Analysis/Conclusion	Efrain Guzman	...12
References/Acknowledgement	Matthew Borruso	...13

Problem Statement

Lockheed Martin has transitioned to a new USB HUB that now uses a 7-port configuration. This HUB has different dimensions than the previous version and the bracket can no longer be used with this design. The previous USB HUB was mounted horizontally which does not meet the criteria to be vertically mounted.

Mission Statement

The mission was to design and build a prototype, using additive manufacturing, for a USB HUB bracket that can fit with the newly implemented HUB that Lockheed Martin is using. This new bracket allows the USB HUB to be mounted vertically and is able to be stacked with three more HUBs. This bracket has a new cable retention for the USB and power cables .In addition, the new design uses minimal material in order to reduce cost and weight while still performing exceptionally. This design is able to be used in theater and can also be manufactured with use of a 3D printer.

Gantt Chart

The Introduction to Engineering Design class was challenged to design a solid model prototype within strict time constraints. Figure 1 below shows a Gantt chart which models Team Three's individual time constraint plans.

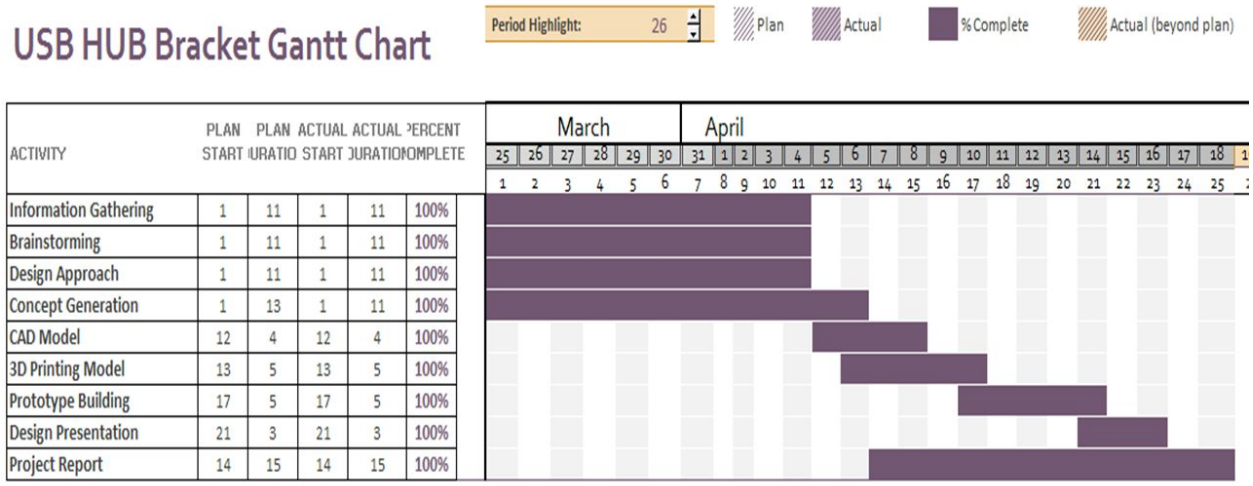

ACTIVITY	PLAN START	PLAN DURATIO	ACTUAL START	ACTUAL DURATION	PERCENT COMPLETE
Information Gathering	1	11	1	11	100%
Brainstorming	1	11	1	11	100%
Design Approach	1	11	1	11	100%
Concept Generation	1	13	1	11	100%
CAD Model	12	4	12	4	100%
3D Printing Model	13	5	13	5	100%
Prototype Building	17	5	17	5	100%
Design Presentation	21	3	21	3	100%
Project Report	14	15	14	15	100%

Figure 1

Concept Generation

Figure 2

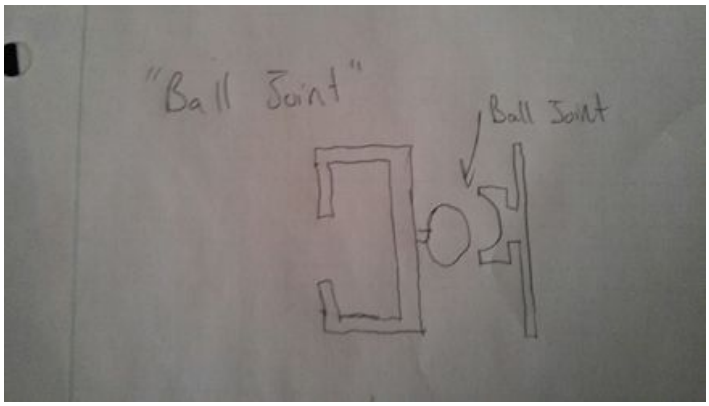

Figure 3

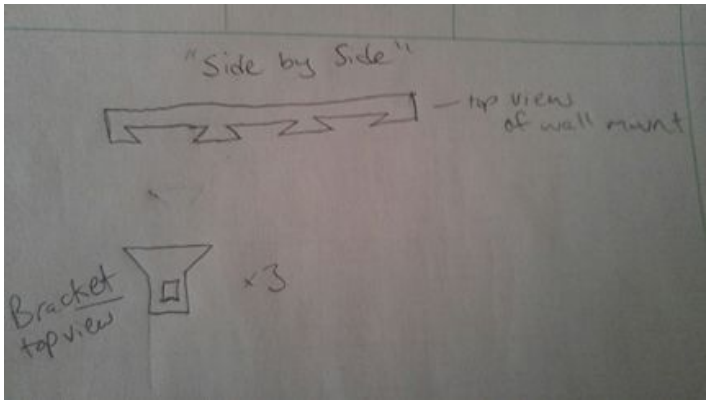

Figure 4

Figure 5

Figure 6

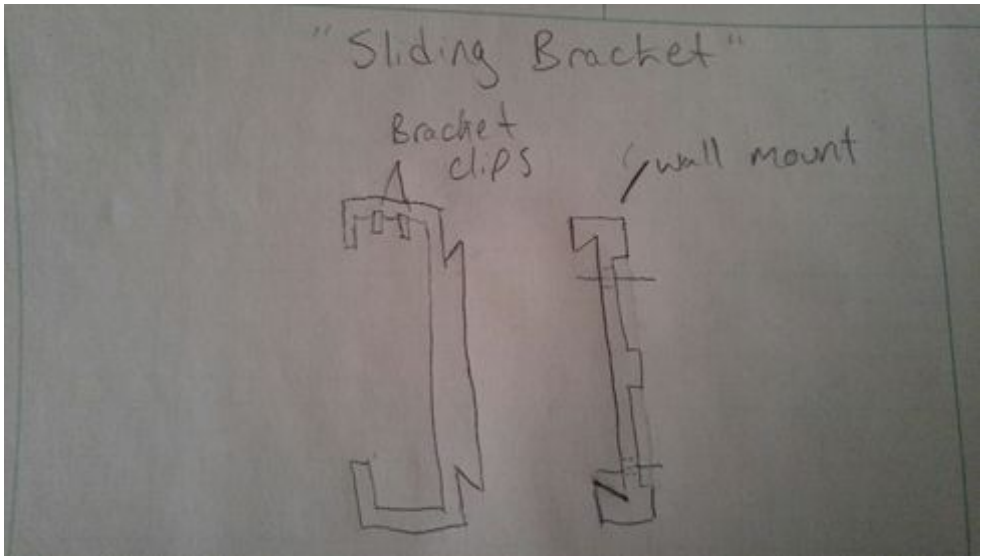

Design Matrix

	Side By Side	Sliding Bracket	Ball Joint	Vertical Mount	Floor/Wall Mount
Durability	0	+	-	0	-
Cost	0	+	-	0	+
Printing Time	-	0	-	0	+
Stacking	0	0	+	0	-
Mounting	+	+	+	0	0
Ease of Assembly	0	+	-	0	+
Sum +	1	4	2	0	3
Sum 0	4	2	0	6	1
Sum -	1	0	4	0	2
Net Score	**0**	**4**	**-2**	**0**	**1**
Rank	**3**	**1**	**5**	**3**	**2**
Continue?	No	Yes	No	No	No

Figure 7

Final Design and Prototype

Figure 8

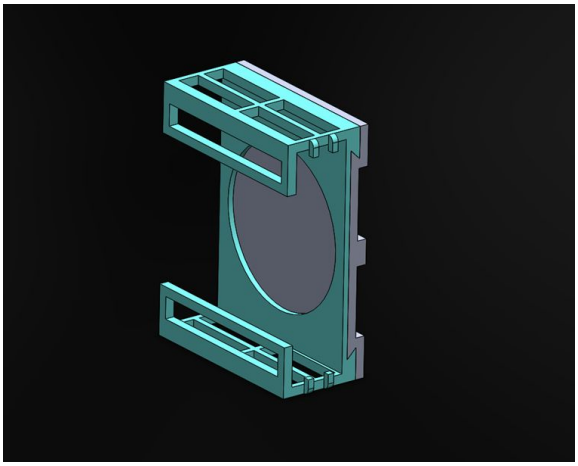

Figure 9

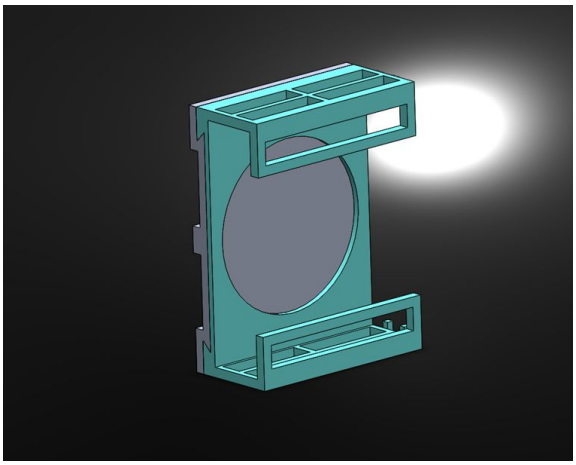

Figure 10

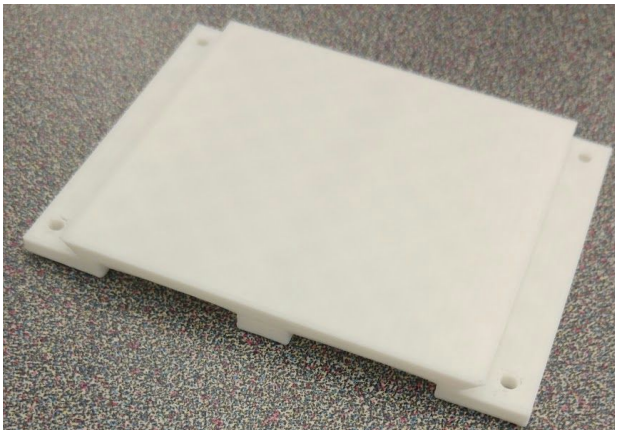

Design Features

Wall Mount: The wall mount is a part that is designed to be the base of the assembly. It has four ⅛" screw holes that are for mounting the assembly on a device.

HUB Bracket: The HUB bracket is the part that securely holds the USB HUB in place. This part was designed to

ABS plastic for the model was chosen to be used due to:
"ABS - ABS as a polymer can take many forms and can be engineered to have many properties. In general, it is a strong plastic with mild flexibility (compared to PLA). Natural ABS before colorants have been added is a soft milky beige. The flexibility of ABS makes creating interlocking pieces or pin connected pieces easier to work with. It is easily sanded and machined. Notably, ABS is soluble in Acetone allowing one to weld parts together with a drop or two, or smooth and create high gloss by brushing or dipping full pieces in Acetone. Compared to PLA, it is much easier to recycle ABS.

Its strength, flexibility, machinability, and higher temperature resistance make it often a preferred plastic by engineers and those with mechanical uses in mind."
http://www.protoparadigm.com/news-updates/the-difference-between-abs-and-pla-for-3d-printing/
^^Courtesy of

Engineering Analysis

1. Place usb cords against wall in line with grooves on the wall mount piece.

2. Place screws in line with screw holes and screw in wall mount.

3. Slide bracket into wall mount to position it for usb use.

4. Slide usb into bracket until it reaches the stopping clips.

Working Drawings

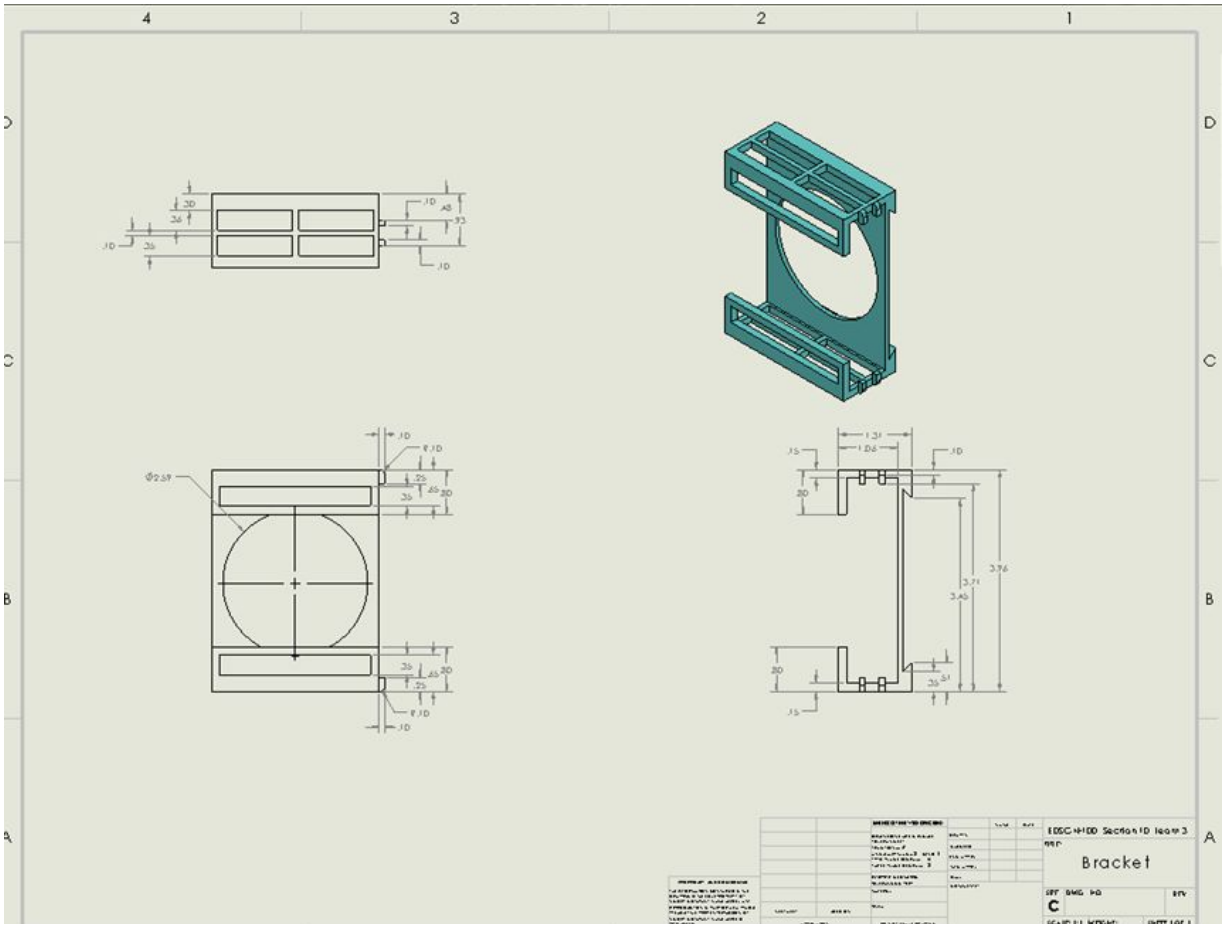

Figure 11

Figure 12

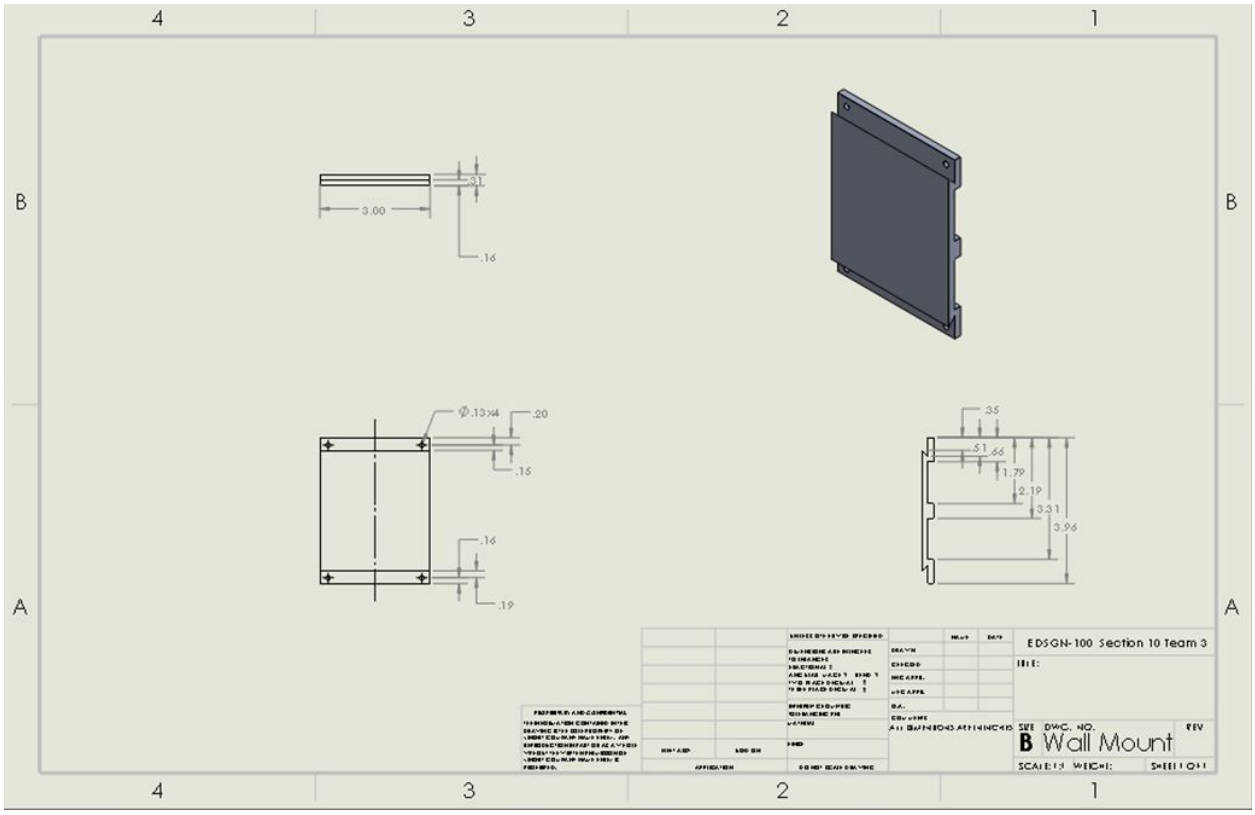

Figure 13

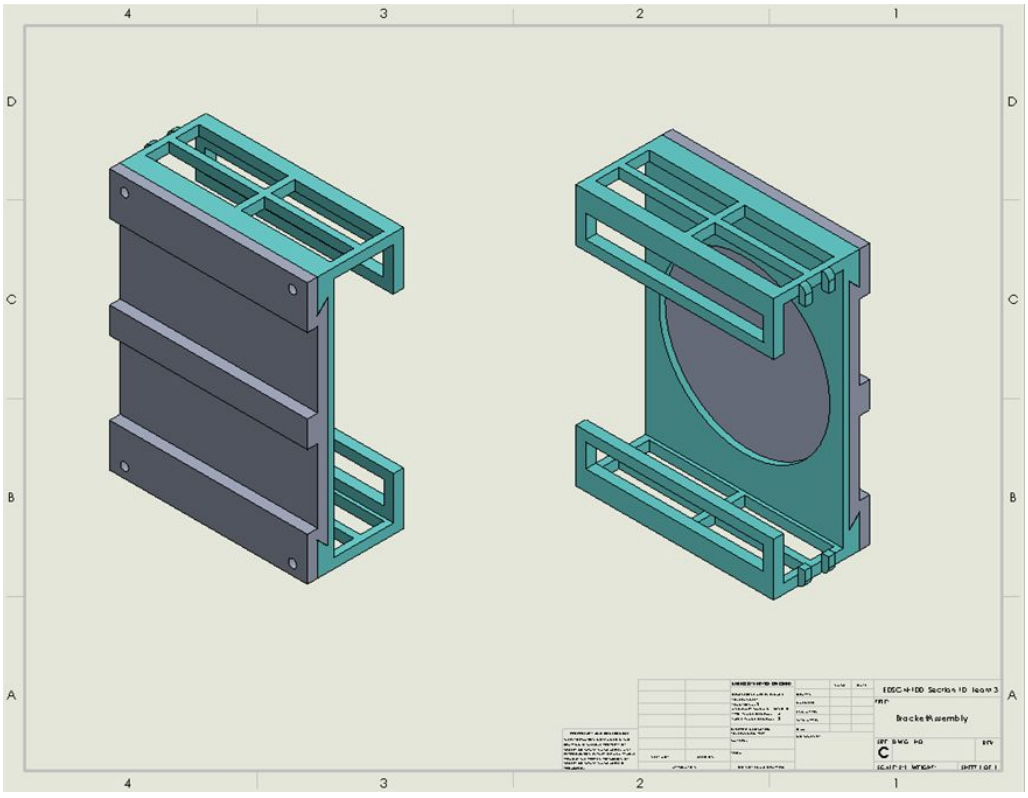

Cost Analysis

The material chosen for this design is ABS. The price of this compound is approximately $20.00 per Kilogram for the 1.75 millimeter diameter used. At a weight of 56 grams, team three's design would have a per-unit price of only $1.13. This is a very small price to pay to make this product.

Conclusion

During the construction of our USB Hub Bracket/Mount, it was very important to keep in mind the accommodations that needed to be met in the new specifications of the bracket. The bracket needed to be able to fit 7 ports, be mounted vertically, can be stacked three high, and can withstand environments from 0-25 degrees Celsius while also withstanding the vibrations. Our prototype shows the efficiency of our work by meeting most of these requirements. Throughout the process of brainstorming, we made sure to be able to fit 7 USB ports within our prototype along with reductions in cost and use of material. However, during our presentation we discovered that this idea needs to be improved. The prototype has a lack of secureness for the USB hub, as it is possible for it to slide out of place because we have nothing to secure it in place after it is slid in. A solution to this problem would be to add a pair of straps around the hub which would secure it from moving anywhere. This solution does not only solve our problem but is cheap and does not make our product any more bulkier than it already is. After modification our design should be ready for manufacturing and use.

References

"Lockheed Martin Presentation." *Lockheed Martin*. N.p., 14 Mar. 2016. Web. 14 Mar. 2016. http://sites.psu.edu/engineeringdesignproject/wp-content/uploads/sites/41537/2016/03/PSU-Freshman-Design-Effort-LM-Overview-v2.pdf

http://www.protoparadigm.com/news-updates/the-difference-between-abs-and-pla-for-3d-printing/

Acknowledgement

The Team would like to acknowledge Lockheed Martin and Dr. Xinli Wu for the opportunity to create a prototype for a major company. The Team would also like to thank Teaching Assistant Nick Petrunyak for all of his help, support, and insight throughout our design process.