EDSGN 100
Section 009 Team 6

The “Dumpling 6000”

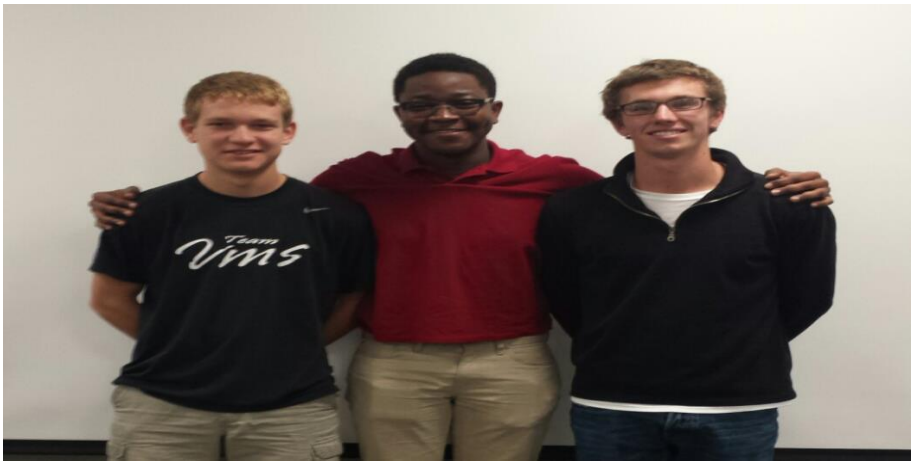

FIG. 1 Design Team IV

Submitted by: Dean Dupree, Paul-Emmanuel Sinkpon, and Joshua Riley
Submitted to: Xinli Wu, M.Ed, Ph.D, P.E.,

FIG. 2 Dumpling 6000 Prototype

www.personal.psu.edu/jmr6277/edsgn100_fa14_section09_team6_dp1.pdf

November 3, 2014

Abstract

This report contains the design project of a dumpling-making machine created by Team VI. This innovative design can be utilized commercially or domestically. The engineering design process, from initial brainstorming to final design, is documented in this report. Team VI has worked hard this semester to construct this product based on the specifications laid forth by Professor Xinli Wu. Design Team IV presents the Dumpling 6000.

Table of Contents

I. Abstract	Paul-Emmanuel Sinkpon pzs5248@psu.edu
II. Introduction	Joshua Riley jmr6277@psu.edu
III. Design Task	Joshua Riley
Problem Statement	
Mission Statement	
Design Specifications	
IV. Design Approach	
Project Management – Gantt Chart	Joshua Riley
Customer Needs Assessment	Design Team
Concept Generation	Design Team
Design Selection Matrices	Paul-Emmanuel Sinkpon
V. Final Design and Prototype	
Working Drawings	Dean Dupree dwd5344@psu.edu
Prototype	Design Team
Design Features	Dean Dupree
Operation Instructions	Paul-Emmanuel Sinkpon
VI. Engineering Analysis	
Working Mechanism	Joshua Riley
Cost Analysis	Dean Dupree
VII. Conclusion	Paul-Emmanuel Sinkpon
VII. Acknowledgments	Joshua Riley
VII. References	Joshua Riley

Introduction

The dumpling is a staple of the cuisine of several Asian cultures. There are several kinds of dumplings, differing in shape, size, and fillings. The Jiaozi are the most popular form of dumplings across Asia and in America. Jiaozi are thought to bring its eaters good fortune. This dumpling consists of a thin roll of dough stuffed with a filler of meat and vegetables. Jiaozi can be steamed, boiled or pan-fried. The making of dumplings is an art that requires skill, patience, and a substantial amount of time.

FIG. 3 JIaozi Dumplings

Design Task

Problem Statement: The production of dumplings is time consuming and labor intensive. There are no machines currently available on the commercial market that cost efficiently and effectively produce dumplings.

Mission Statement: Design Team VI will create a compact, portable, dishwasher-safe, cost efficient, and durable dumpling making machine that will produce at least 10 dumplings per minute.

Design Specifications:

- The dumpling maker should be automatic or semi-automatic.
- The dumpling maker should produce no less than 10 dumplings per minute on average.
- The material cost for the dumpling maker should not exceed $200 unless it can be justified.
- The dumpling maker should be safe as a food processor, easy to maintain, safe to use, and dishwasher safe.

Design Approach

Table 1. **Gantt Chart**

Customer Needs Assessment

Dragon 21

How many dumplings do you make on the average day?

150-200 dumplings

How many dumplings can you make in a minute?

About 3 dumplings per person

How much would you be willing to pay for a machine that produces dumplings?

Fifty to one hundred dollars

How much space could be allocated for this machine?

Microwave size, but could be taller

Would you rather hand wash this machine or have it be dishwasher safe?

Dishwasher safe

What is your expected longevity of this dumpling making machine?

3 to 4 years

Hokkaido Sushi & Hibachi

How many dumplings do you make on the average day?

Between 75 and 100 dumplings

How many dumplings can you make in a minute?

About 7 or 8 dumplings

How much would you be willing to pay for a machine that produces dumplings?

Around 150 dollars

How much space could be allocated for this machine?

About a foot by 3 feet, not too tall

Would you rather hand wash this machine or have it be dishwasher safe?

Dishwasher safe

What is your expected longevity of this dumpling making machine?

4 or 5 years

Wong Gee Restaurant

How many dumplings do you make on the average day?

80 dumplings

How many dumplings can you make in a minute?

8 to 10 dumplings

How much would you be willing to pay for a machine that produces dumplings?

About 75 dollars

How much space could be allocated for this machine?

Approximately the size of a microwave

Would you rather hand wash this machine or have it be dishwasher safe?

Either, but dish washer safe preferably

What is your expected longevity of this dumpling making machine?

Three to four years

Concept Generation

Design #1 Two-Part

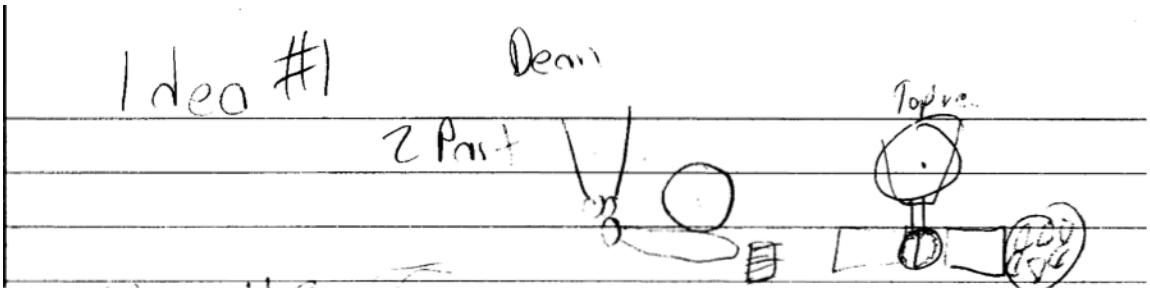

FIG. 4 Idea #1

This idea features two separate machines. The first mixes, flattens, and shapes the dough into the desired shape. The restaurant worker would have to manually transport the dough from machine 1 to machine 2. The second machine then filled and folded the dumpling. This idea requires manual mixing of dough and filler.

Design #2 Square Press

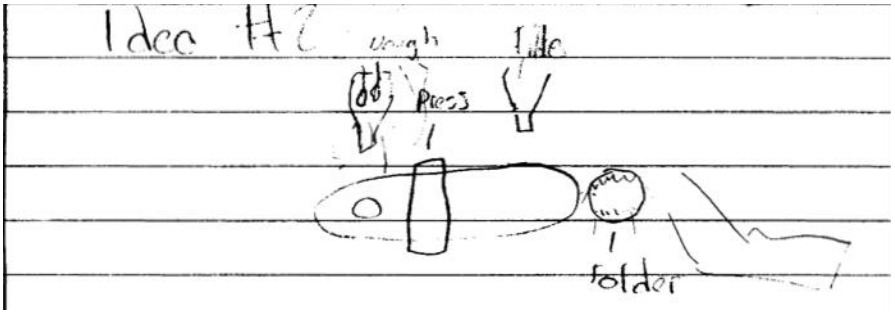

FIG. 5 Idea #2

Design #2 is a machine with four separates steps. The first part is that the desired amount of dough is dropped as a ball onto the conveyor belt. Then, the dough is flattened by a square press. The filler is dropped onto the dough as it moves along the belt. Last, the dumpling is folded and dispensed into the end tray. This idea could be more compact than the previous design, but it requires coordination of the machine timing. There is too much potential error in this design.

Design #3 Fill'N'Fold

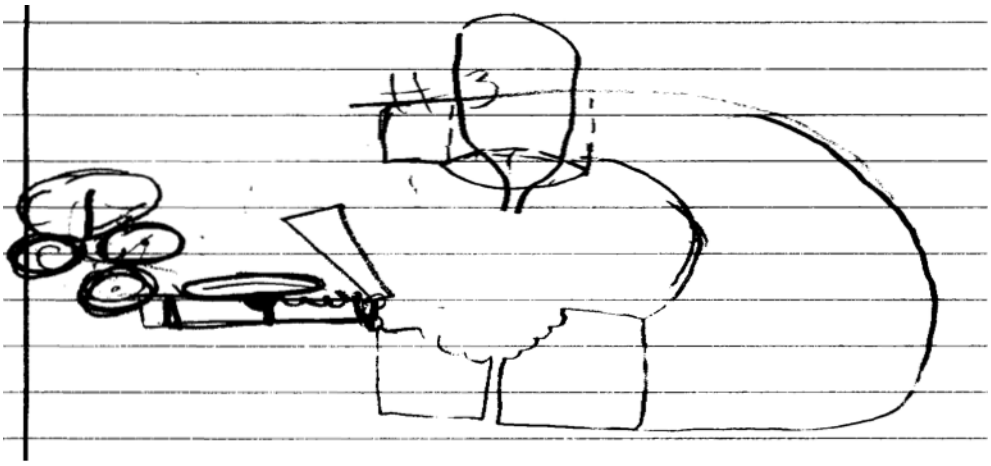

FIG. 6 Idea #3

The Fill'N'Fold Design initially included pre-made dough that would be placed on a conveyor belt. The dough would move to a design feature that would drop the filling and then fold the dumpling in the same location. This is the main feature that attributed to the final design for Dumpling 6000. The use of pre-made dough was neither cost efficient nor met the design specifications for this project. When dough production and formation was added, Fill'N'Fold became the strongest initial design.

Design #4 Double Belt Dumpling

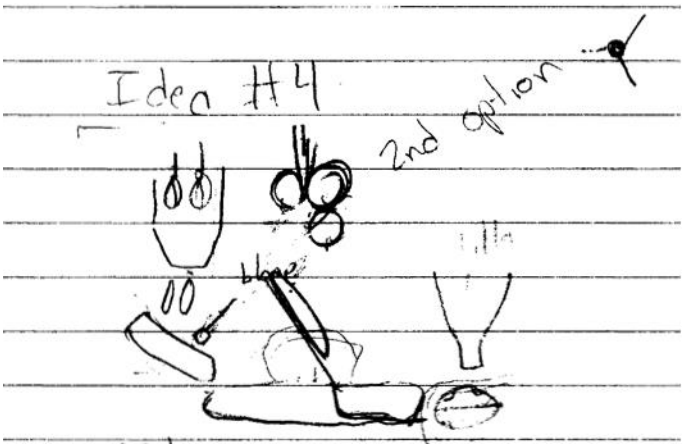

FIG. 7 Idea #4

The Double Belt design was named for its use of two distinct conveyor belts. The first belt was used to ensure a clean cut of the dough. The second belt, faster than the first, would separate the dough to enable enough time to fill and fold the dumpling. Design #4 contains a similar filling/folding design as Design #3. This design idea could have 2 ways to cut the dough. The first option was to have a blade that would cut along the conveyor belt to form properly sized dough for the dumplings. The second option was to put a third roller after the flattening rollers that would cut the dough. The roller would have a blade on its surface and would be properly dimensioned to ensure dough size of approximately 4 inches in diameter. A downside of this design is the inefficiency of contained two expensive conveyor belts.

Design #5 All N1

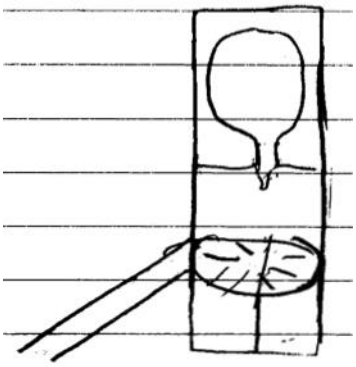

FIG. 8 Idea #5

This extremely compact design filled, folded, and dispensed the dumpling all in the same location. Methods of flattening and cutting the dough were not included in this design idea. The All N1 was portable, efficient, and condense, but it lacked the ability to be taken apart easily.

Design Selection Matrices

Table 2. Design Matrix

			Concepts		
	1	2	3	4	5
Selection Criteria	Two-Part	Square Press	Fill'N'Fold	Slanted Belt	All N1
Durability	-	0	+	0	0
Speed	0	0	0	+	0
Ease of Operation	0	+	-	+	-
Portability	0	-	0	-	+
Safety	0	0	0	-	0
Ease of upkeep	-	0	+	-	0
Sum +'s	0	1	2	2	1
Sum 0's	4	4	3	1	4
Sum -'s	2	1	1	3	1
Net Score	-2	0	1	-1	0
Rank	5	2	1	4	2
Continue?	No	Combine	Yes	Combine	Combine

Table 3. Weighted Design Matrix

Selection Criteria	Weight	Concepts					
		Dumpling 6000 (Model 2 + 4)		Fill'N'Fold		Modified All N1	
		Rating	Weighted score	Rating	Weighted score	Rating	Weighted score
Durability	15%	4	0.6	4	0.6	3	0.45
Speed	10	4	0.4	3	0.3	3	0.3
Ease of Operation	25	4	1	2	0.5	2	0.5
Portability	5	4	0.2	3	0.15	4	0.2
Safety	25	5	1.25	3	0.75	3	0.75
Ease of upkeep	20	3	0.6	4	0.8	3	0.6
Total Score		4.05		2.9		2.8	
Rank		1		2		3	
Continue?		Develop		No		No	

Final Design and Prototype

Working Drawings

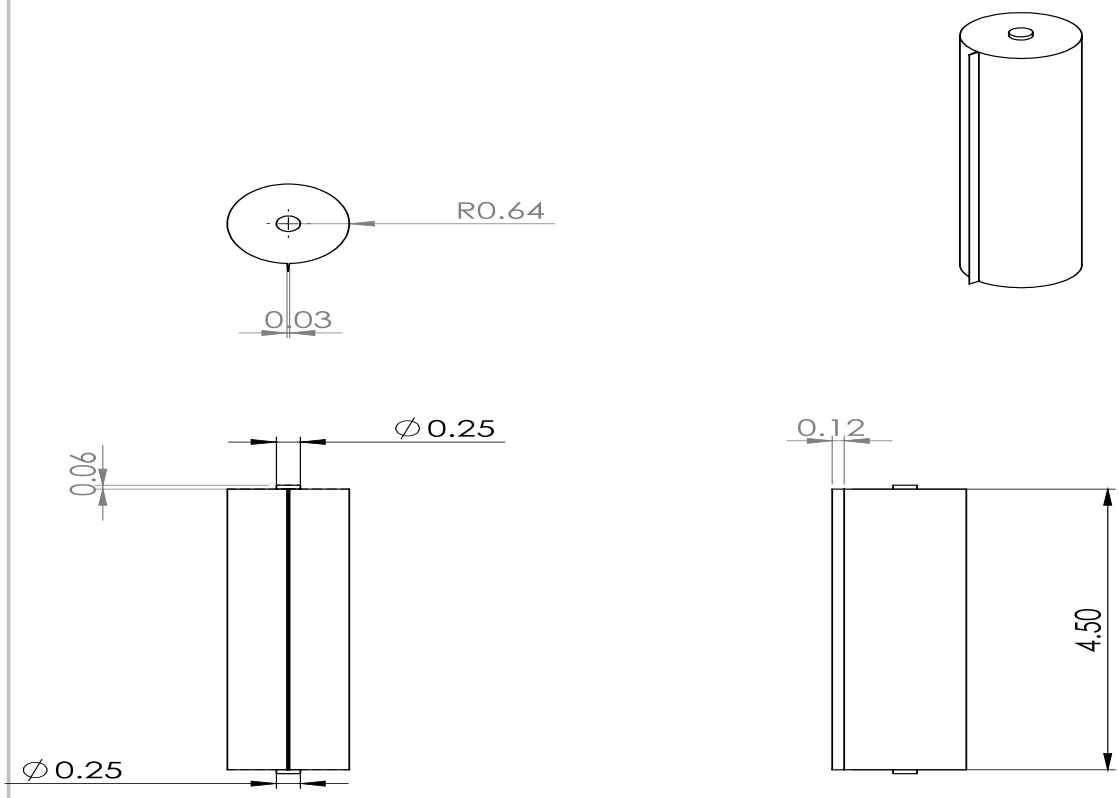

UNLESS OTHERWISE SPECIFIED:
DIMENSIONS ARE IN MILLIMETERS
SURFACE FINISH:
TOLERANCES:
LINEAR:
ANGULAR:

FINISH:

DEBUR AND BREAK SHARP EDGES

DO NOT SCALE DRAWING

REVISION

	NAME	SIGNATURE	DATE
DRAWN			
CHK'D			
APPV'D			
MFG			
Q.A			

TITLE:

roller with blade drawing

MATERIAL:

DWG NO.

A4

WEIGHT:

SCALE:1:2

SHEET 1 OF 1

FIG. 8 Blade Roller Multi-view Drawing with Isometric

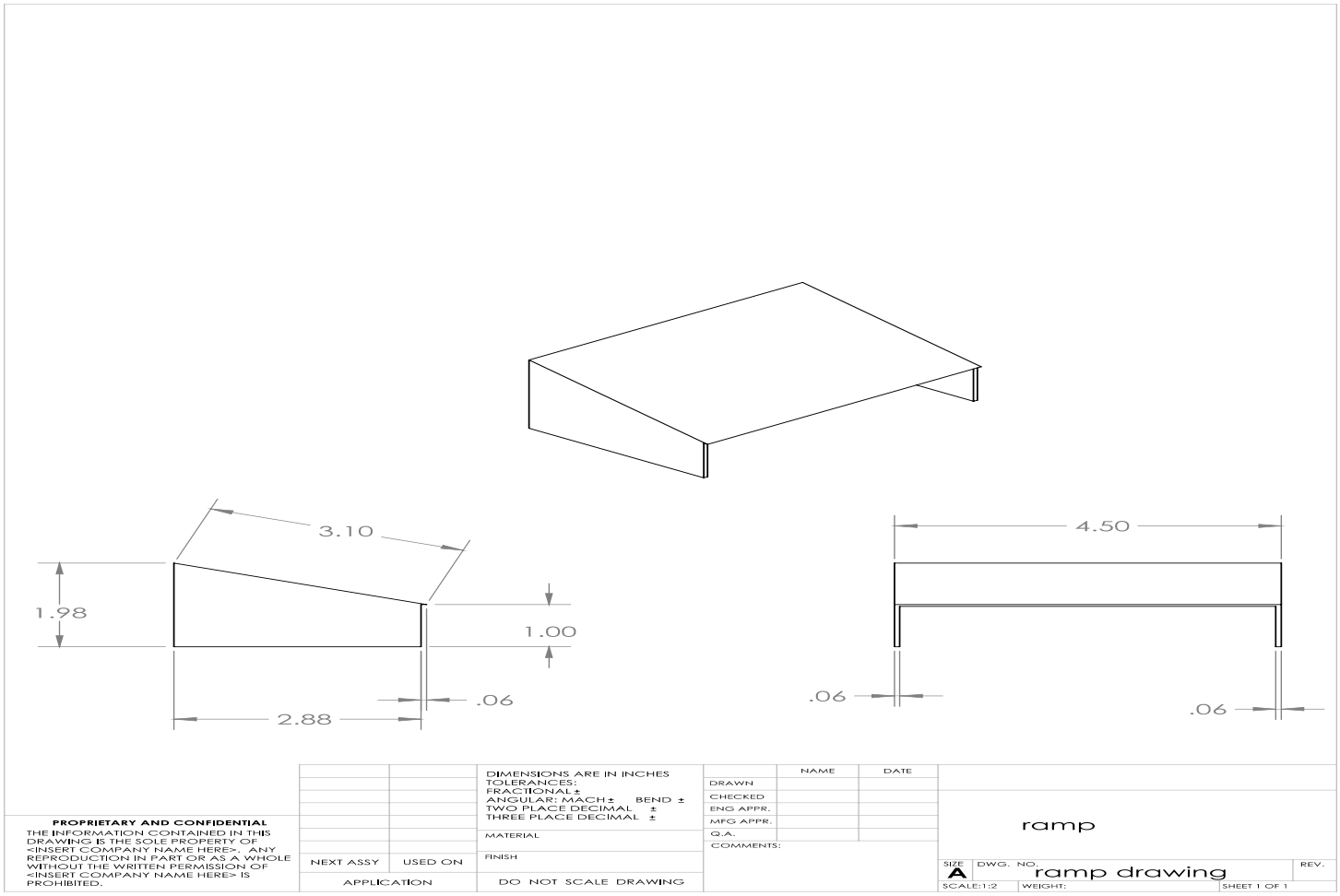

FIG. 10 Ramp Front, Right and Isometric View

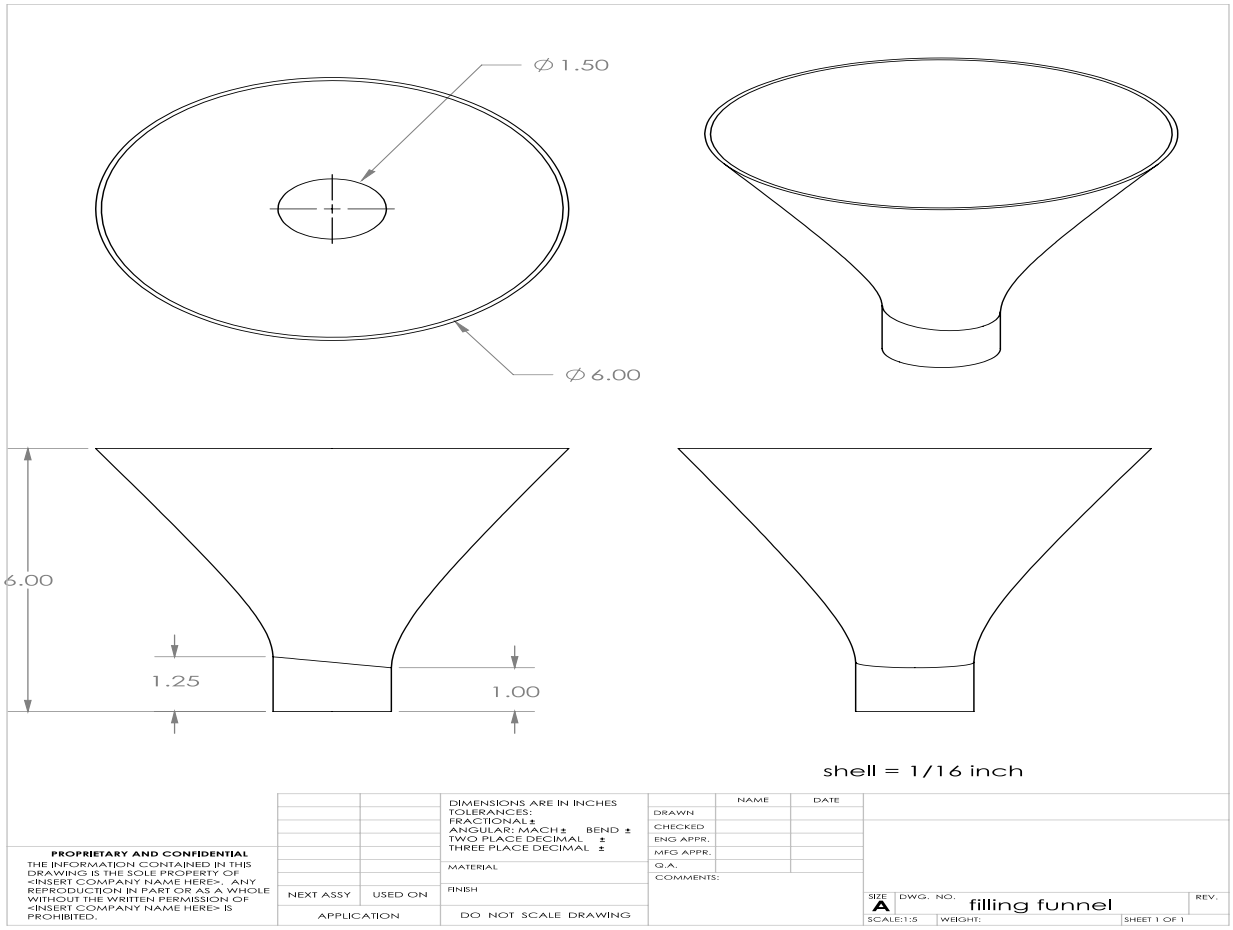

FIG. 11 Filling Funnel Multiview and Isometric

Assembly Drawing

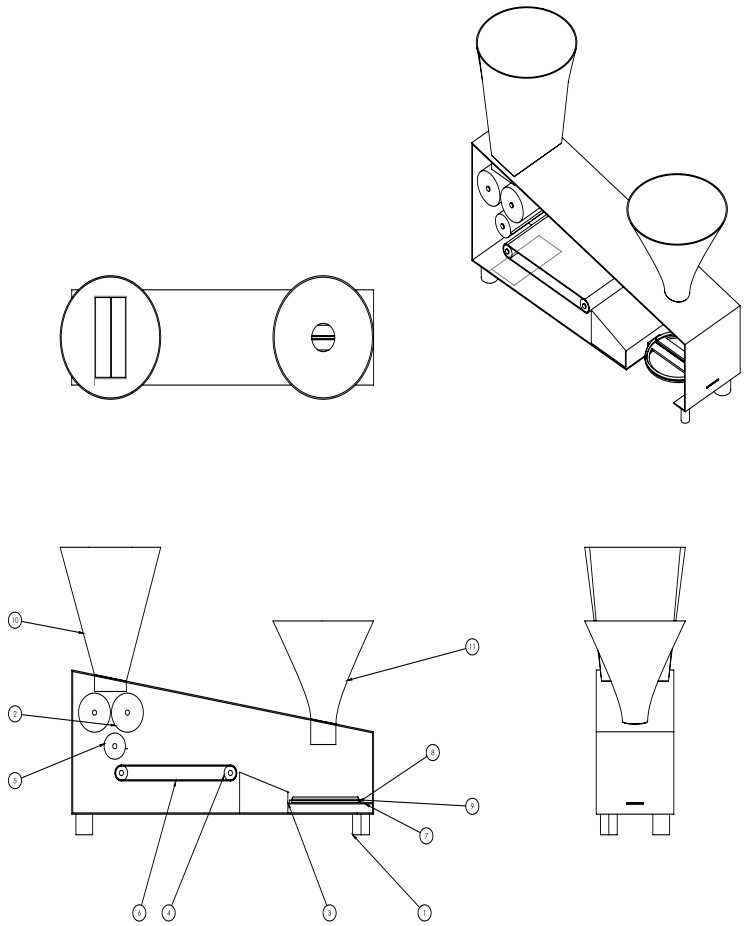

ITEM NO.	PART NUMBER	DESCRIPTION	QTY.
1	case		1
2	dough roller		2
3	ramp		1
4	conveyor roller		2
5	roller with blade		1
6	conveyor belt		1
7	dough clamp rod		1
8	dough clamp		1
9	clamp blade		1
10	dough funnel		1
11	filling funnel		1

Dumpling Maker 3000

A1

FIG. 12 Assembly Drawing with Bill of Materials

Prototype

FIG. 13 Design Prototype

The Dumpling 6000 was produced in the design laboratory in the Hammond Building at Pennsylvania State University. This built-to-scale prototype is meant to demonstrate the size and working mechanism of this final design. After feedback from fellow classmates and Professor Xinli Wu, Dumpling 6000 became even more compact than the prototype portrays.

Design Features

The Dumpling 6000 has features that make it the perfect dumpling maker. Due to the few number of components this design can easily be taken apart and put back together for dishwasher cleaning between uses. The top is removable and all the pieces inside can come out through the top. The conveyor belt used is FDA approved as well as of non-stick oil-resistant material. This machine maximizes the use of counter space because many steps in the dumpling making process are combined to make this design more compact. The Dumpling 6000 is only 4.5 in x 18 in x 7 in. The dough is cut to the correct size as it is being rolled out and the dumpling is filled in the same place that it is folded and cut to shape. Putting together these steps allows for a much more condensed machine. The Dumpling 6000 is also completely automated other than putting

dough and filling into the machine funnels. Trimmings from the dumplings can even be recycled back into the new dough (if not tainted by the filling). This is not a necessary step but if you wish to get the most out of your dough than it is recommended.

Operation Instructions

The Dumpling 6000 is easily assembled and disassembled. Only a few steps are required to start making dumplings. The operator of this machine has to premix the dough and add it to the funnel at the taller side of the machine. Downward pressure must be applied to the dough at the start of making dumplings. Also, the filling needs to be added adding to the other funnel. The funnels are large enough to store ingredients for several dumplings, but supervision is required to keep both funnels full. A bowl must also be placed at the end under the opening to catch the finished dumpling and dough scraps. The operator can then separate the trimmings from the dumplings.

Engineering Analysis

Working Mechanism

As the machine is started, and downwards pressure is applied to the dough, the process of dumpling making begins. Dough is fed through the 4 inch wide slit in the funnel and flattened by the first two rollers. These two rollers are an eighth of an inch apart to mold the dough to proper width. The normal surface of the blade roller rotates at the same angular velocity as the original two rollers, which is one inch per second. The blade rollers circumference is 4 inches so that the blade on the roller cuts the dough at the desired dimensions.

After the blade roller cuts the dough, the 4 in x 4 in x 1/8 in square of dough drops onto the conveyor belt. The conveyor belt travels at the speed of 7 inches per second. The dough then slides down the sloped non-stick ramp onto the clamp. The desired amount of filler is than dropped onto the dough. The clamp has a central support beam so that the filler will remain supported by the clamp. The outside ring of the clamp snaps shut, folding the edge of the dough. The folding part of the clamp returns to normal position as the clamp itself rotates to dump the folded dumpling down into the bowl or tray.

Overall, the first dumpling should take approximately 8 seconds to produce. Each following dumpling will take approximately 4 seconds. At this calculated rate, Dumpling 6000 will produce 14 dumplings per minute.

Cost Analysis

Item	Cost	Quantity	Total
case (Aluminum)	$40.13	1	$40.13
dough roller	$7.23	2	$14.46
ramp	$1.78	1	$1.78
conveyor roller	$8.98	2	$17.96
conveyor belt	$5.74	1	$5.74
dough funnel	$28.09	1	$28.09
filling funnel	$20.36	1	$20.36
dough clamp	$17.80	1	$17.80
rubber stands	$0.81	4	$3.24
blade roller	$8.82	1	$8.82

Total: $167.29

The cost is kept relatively low due to the size of the product and the number of components. These prices are based on a single item purchase so the price would only decrease after the product goes into mass production.

Conclusion

Team VI believes that Design Project I has been a success. This design meets every criterion set forth. First and foremost, this dumpling maker is of compact size and completely automated. These are elements attractive to households and restaurants. Secondly, this design revealed to be efficient, producing well over the minimum ten dumplings per minute while well under the cost of two hundred dollars. Last but not least, the parts of this dumpling maker are

detachable and dishwasher safe. A downside of this design is that it requires coordination between several parts of the machine. Design Team IV feels that there has been a successful confrontation of an engineering problem and an innovative response to the task assigned. This project has helped to instill an effective engineering approach, as well as increase the teamwork skills and technical analysis of the members of this design team. Overall, Design Team VI is extremely pleased with the final design for this project. Enjoy the "Dumpling 6000.

Acknowledgments

Team 6 would like to thank these institutions, people, and businesses for their advice, help, and support in the completion of this design project.

- Pennsylvania State University Center for Engineering Design and Entrepreneurship, for providing resources and workspace
- Mcmaster-Carr.com, website source for part prices
- Thomas Antoniak, Teaching Assistant
- Xinli Wu, M.Ed, Ph.D, P.E., Instructor

For cooperating to provide a customer needs assessment:

- Hokkaido Sushi & Hibachi. Elizabethtown, PA
- Dragon 21. Fleetwood, PA
- Wong Gee Restaurant. Silver Springs, MD

References

"Festive Food and Its Fate." *Beijing International*. Web. http://www.ebeijing.gov.cn/Life/Eating/ChineseCuisine/t912568.htm