Darren Slotnick

EDSGN 100

Personal CAD Project - Tank

My CAD project was inspired by a picture of a tank that I found on Wikipedia.org, with its file name being 620pxx-M1_Abrams-TUSK.svg.png (Figure 1). I thought this picture was an accurate representation of what a generic modern tank looks like.

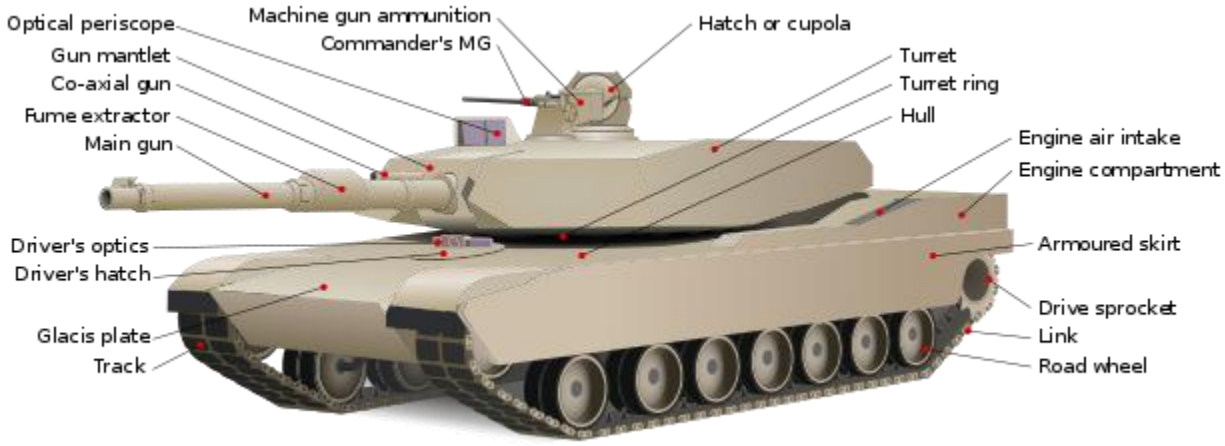

Figure 1: Internet Source

Shown below are four images of the tank that I designed on SolidWorks (Figures 2-5).

Figure 2: Full view

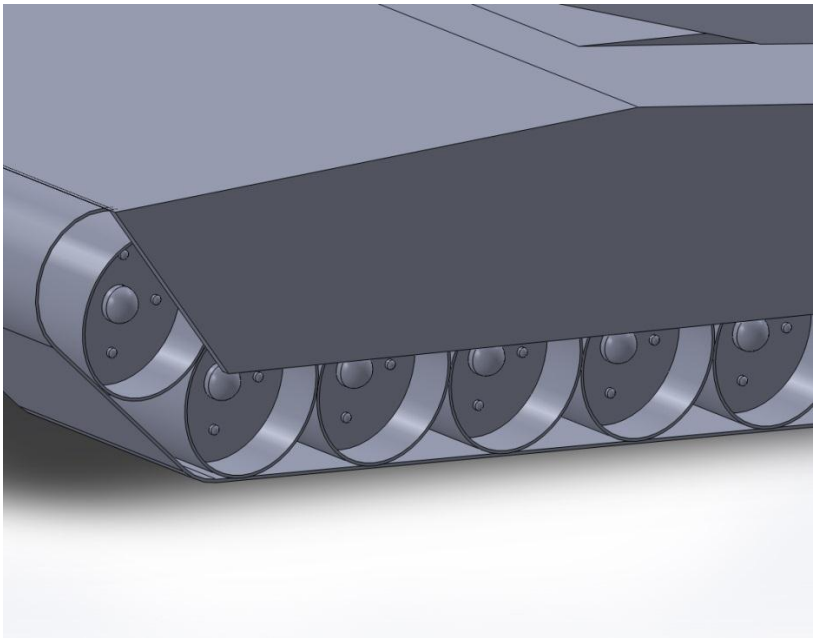

Figure 3: Zoom on treads

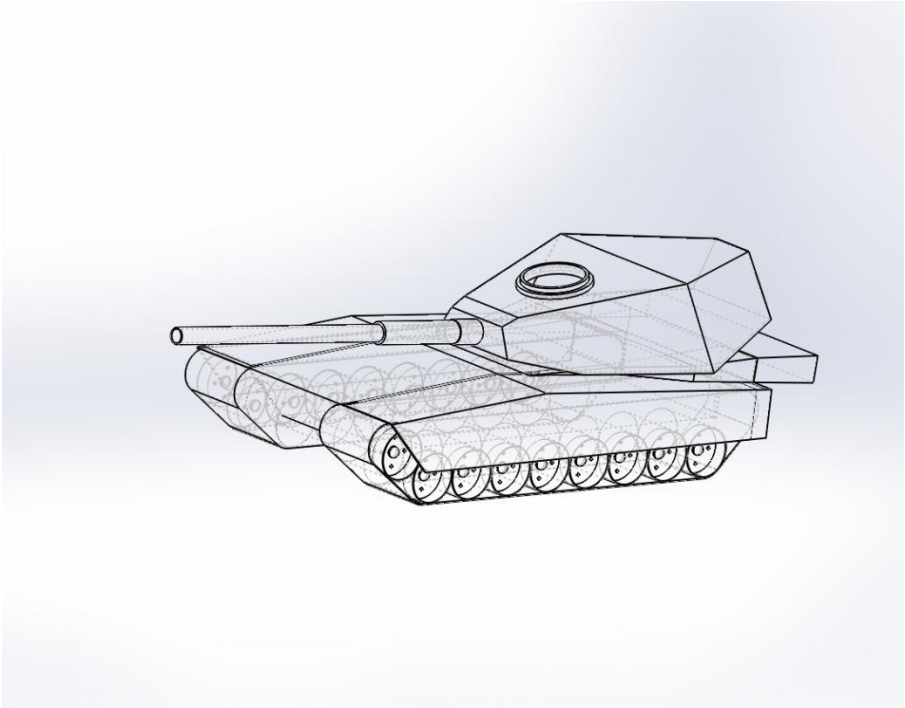

Figure 4: See-through view

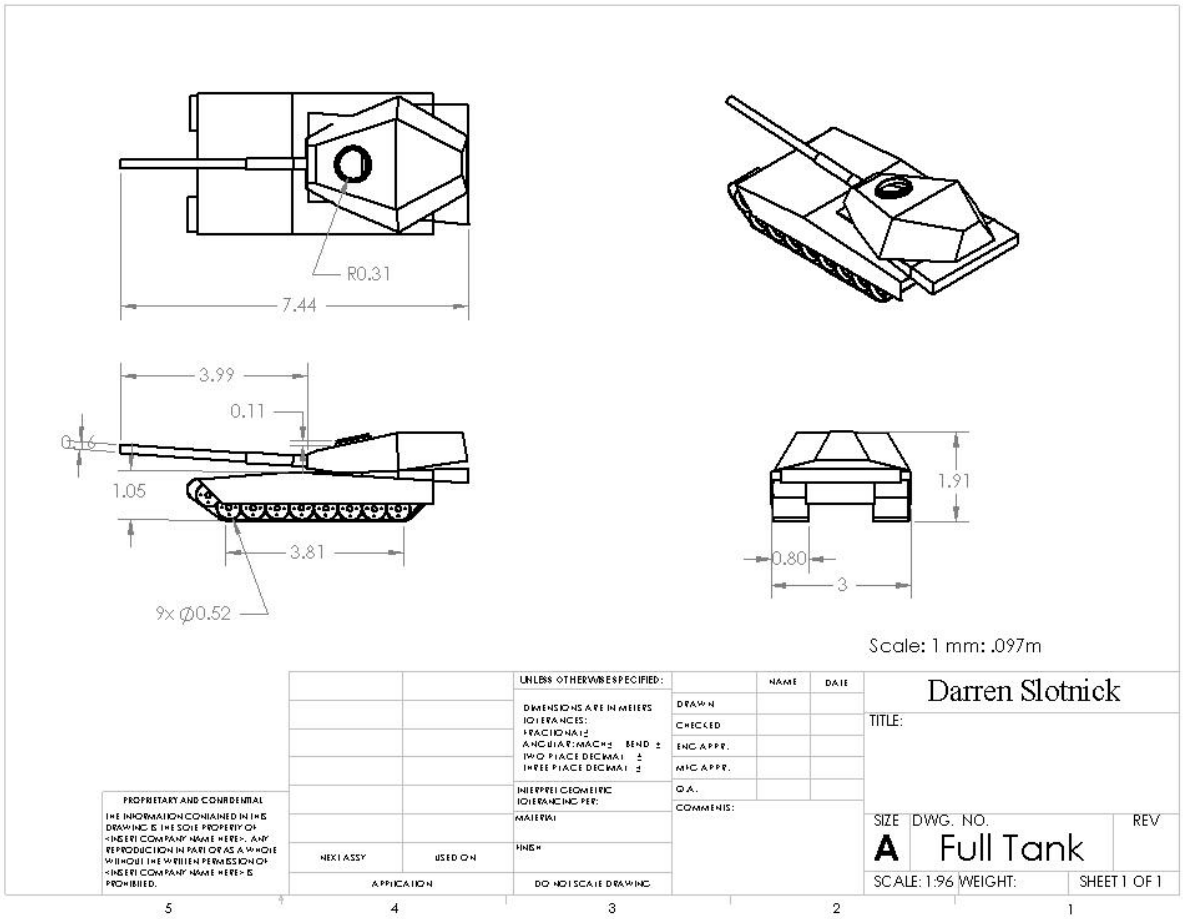

Figure 5: Multivew and Isometric Drawing

Figure 2 shows a full view of the finished tank, while Figure 3 shows a close-up look at the tank treads. Figure 4 shows a see-through version of the tank, where more detail of the tank's design is shown. Finally, Figure 5 shows a multiview drawing of the tank with an isometric view in the top right corner. Overall dimensions are shown on this drawing, as well as the scale.

I chose this object to create in SolidWorks because I thought it would be interesting to design and see a tank come to life. When considering possible topics, I knew that I wanted to create an object that could be assembled with several pieces. Much like solving a problem one part at a time, I wanted to build my CAD model one piece at a time. As a result, I chose to build a tank, as a tank has many pieces that can be assembled together as they are finished, one section at a time.

The most difficult part of this project was creating the tank treads. I had to make sure that the wheels would fit inside the tank treads, and that the tank treads would fit inside the shell of the tank that I had already created. Ensuring that these dimensions lined up was a significant challenge. Another

challenging part of the project was putting each individual wheel into the tank treads. Although this was not difficult in itself, the sheer number of wheels (18) that needed to be placed made this a tedious job.

When I was a kid, I would frequently draw tanks and other military equipment for my own entertainment. I loved playing with army men, and talked to my friends incessantly about our different tank designs. Designing my own tank on SolidWorks was a very relatable project, as it often reminded me of my childhood. In addition, as an aerospace engineer, I hope to work for a company that specializes in military vehicles. Although I likely won't be designing a tank, it is a similar task to something that I may design during my career.

This project's most valuable lesson was the experience that it gave me in SolidWorks. Knowing how to proficiently use CAD software is a very valuable tool for engineers. Not only was this project valuable, it was very enjoyable to do! Seeing your imagination and visualizations come to life on the computer is a very rewarding experience.

As a member of the Lunar Lions team here at Penn State, I hope to use the experience gained from this project to help me design CAD models for a lunar rover that we hope to send to the moon in 2015. Since a lunar rover is significantly more complicated that designing a tank, I will need all the experience I can get! The fact that something so complicated as a lunar rover can be designed on the same software that we have been using is a testament to the power of VAD as a visualization and design tool.