ENGR 493

Fall 2013

Professor Mike Erdman

Passive Solar Tracker Team

Kevin Leonard, Govind Raman, Darren Slotnick, Ming Zheng

Table of Contents

Abstract..... 3

Concept Development..... 3-6

Design Refinement……..... 6-8

Calculations..... 9-10

Further Design Refinement.....12-13

Design of Prototype.....14

Conclusion and Recommendation..... 15

Appendix.....16-18

Abstract

At the Passive Solar Tracker team, our goal is to develop a unique and cheap source of energy for developing communities. This semester, we focused our efforts on creating a passive solar tracker that can be implemented in underdeveloped Kenyan communities, providing much needed power to people that currently don't have access to reliable electricity. A solar tracker is essentially a moving solar panel that tracks the movement of the sun, increasing its efficiency by increasing the amount of sunlight, and thus energy, hitting the photovoltaic cells throughout the day. A passive solar tracker is similar to an active tracker, but does not rely on any source of external energy or motor to power its motion. Kenyan communities could buy our passive solar tracker and use the source of electricity to improve their quality of living. Our team's goal was for our passive solar tracker to both improve communities and the environment by providing a way to produce clean and reliable energy. Going forward, we recommend that future teams continue the research we've done to develop a liquid-based equilibrium system that requires two photovoltaic cell components providing the additional heat needed to power the tracker.

Concept Development

Our team conducted extensive research from several sources to further our understanding about the economic conditions in Kenya, as well as the country's climate. One of the key facts that influenced our design was the range of temperatures that can be seen throughout the year. The typical Kenyan summer day reaches a high 24.7 C, while the typical winter day reaches a high of 21.0 C. Kenya can also get very cold at night while reaching high temperatures during the day. Our passive solar tracker needed to be able to produce electricity at a range of reasonable temperatures that are typically present throughout most Kenya winters and summers. We also found that most farmers in Kenya were relatively poor and did not have much money to spend. The average annual income in Kenya is the equivalent of $1700 USD, and a Kenyan farmer's income can be as low as $175 USD a year. As a result, we needed to keep the passive solar tracker as cheap as possible. At the very least, we wanted our tracker to be economically competitive with our solar trackers available on the market. We also found that there was extreme weather in Kenya, including heavy rains and gusty wind. Our solar tracker had to be durable enough to handle this environment.

Using our research, we determined several critical features that our passive solar tracker would need to have. The tracker will need to be composed of sustainable and environmentally friendly parts, as it is our team's priority and vision that the entire process of generating energy is as carbon-neutral and as clean possible. It is also critically important that our passive solar tracker is as inexpensive as possible to make it accessible to low income Kenyan communities. Because there may not be Kenyans with technical or engineering experience in certain villages, our tracker needs to be relatively low-maintenance, and easy and cheap to repair if necessary. Finally, our tracker needs to be different from other passive solar trackers

currently on the market, and have a distinguishing feature that makes it unique and sets it apart from other solar trackers.

After determining the necessary qualities that our tracker needed to have, it was important to conduct comprehensive research on existing passive solar tracker systems, both to serve as inspiration and to ensure that our team does not reinvent a passive system that has already been developed. It became apparent after extensive researching that there were several unique passive systems that did not rely on a motor or any external source of energy.

The most popular method to passively rotate a solar panel is a method that uses a refrigerant with a low boiling point, typically Freon-12. As shown in **Figure 1** below, by strategically placing shades overtop the two vessels containing the refrigerant, the liquid heats up in different places on the tracker as the sun progresses through the day. As the refrigerant exposed to sunlight starts to boil, the increased vapor pressure due the boiling liquid will push some of the refrigerant to the other end of the tracker until the system equilibrates itself.

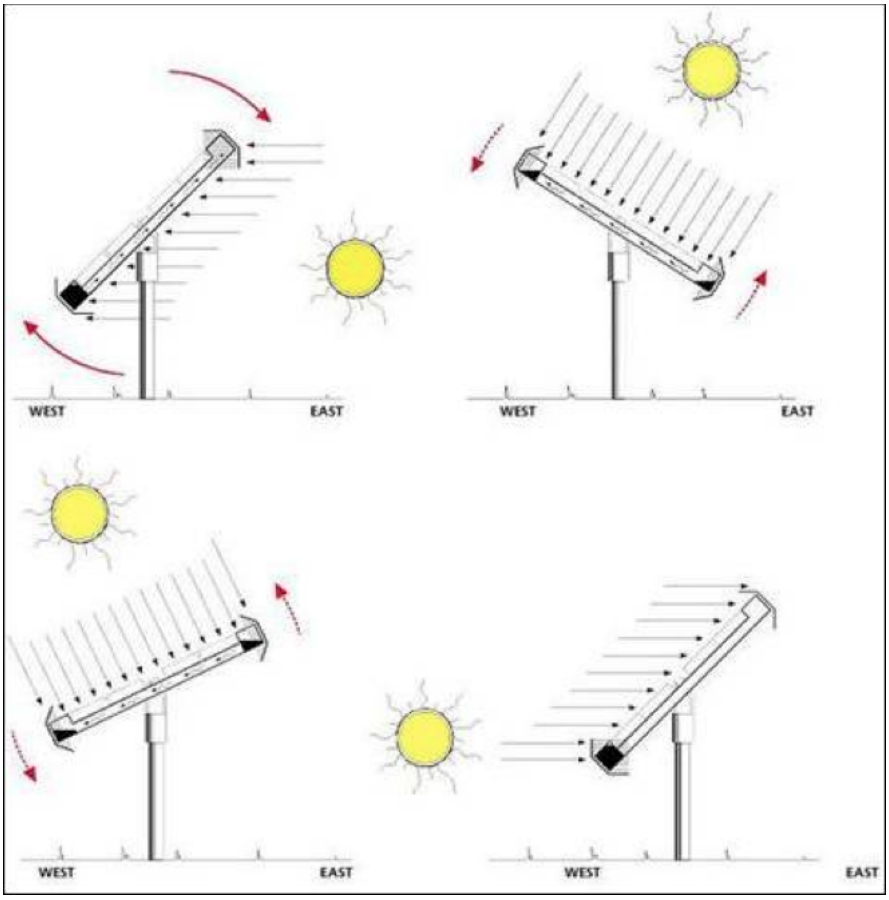

Figure 1 – Liquid-based equilibrium system

There are many benefits to this system, which is currently sold by the company Zomeworks. It does not need to be reset in the morning, as the sun will turn the entire system as it rises in the east. The system is reliant, as it has been extensively tested by Zomeworks. This passive system increases efficiency by 35 – 40% during summer, and 15 – 20% during the winter. However, this number is much

lower in northern or cloudy climates. Due to Kenya's hot climate, we can likely project that the increase in efficiency would be close to to 35-40% during the summer, and 15-20% during the winter. On the downside, Freon-12 is extremely hazardous if released into the atmosphere. It is an incredibly stable compound that won't degrade until exposed to solar radiation, at which point it can destroy ozone. This system also requires viscous dampers to prevent wind gusts from rotating the tracker prematurely. The cost of a Zomeworks tracker ranges from $800 to over $4000, depending on size. One possibility for our passive solar tracker system is finding an alternate liquid to use in the tracker system instead of Freon-12, such as water. This would be a cheaper and more environmentally friendly solution that would make our tracker unique.

Another idea we researched is the possibility of using holograms, or reflector strips, underneath the PV cells. Sunlight can pass through the transparent part of the module and will reflect on the hologram, allowing sunlight to hit the photovoltaic cell from both the front side and the backside, increasing efficiency. The specific hologram material shown in **Figure 2** was developed by Prism Solar, and is officially called a Holographic Planar Concentrator.

Figure 2 - Holograms

This particular method is very unique because it eliminates the need to rotate the panel, as the holographic strips are very effective at reflecting sunlight at the low incident angles found in the morning and late afternoon, causing increased efficiency during the these times. The overall efficiency increase and the decreased use of silicon bring the cost of energy produced down to $1 per watt. Unfortunately, Prism Solar patents the holographic strips, so it would be necessary to come up with our own hologram reflectors if this avenue were to be pursued. Our team ruled this idea out, as we preferred a method that involved physically rotating a solar panel, and we lacked the necessary skills to develop our own high-tech hologram.

We came across a third method of passively rotating the solar panel in the form of using liquid crystal elastomers (LCE) and carbon nanotubes. In this system being developed by Hongrui Jiang, a professor at UW-Madison, actuators comprised of LCE are laced with carbon nanotubes that heat up as they absorb light, causing a heat differential. Carbon nanotubes are used here because of their ability to absorb a wide range of light wavelengths. This heat difference between the environment and the actuator causes the LCE to shrink, due to LCE's unique characteristic of contracting in the presence of heat. The shrinking LCE will cause the entire assembly to bow in the direction of the strongest sunlight.

The biggest benefit of this method is that it improves efficiency by 10% over an active tracker. However, this is a significantly less than the liquid method mentioned earlier. This system also uses advanced engineered materials, such as carbon nanotubes, which significantly raises the price of this system. It is still in its prototyping stages, and has not been developed by UW-Madison researchers to the point where the initial price would be reasonable to make up for the increase in efficiency. Due to the high cost and advanced technical experienced needed to work with carbon nanotubes, our team ruled this idea out as well.

One additional idea suggested by Mike Erdman involved taking advantage of the thermal expansion of metals when exposed to heat to rotate a tracker. Mike's idea was to set up a system such that a bar of metal would be mounted on either side of the tracker, with the other end of each bar anchored to a point in the ground close to the pivot point of the tracker. By utilizing shades over the metals similar to the liquid based system, we could potentially cause one metal bar to expand farther than the other, causing it to push on the pivot point and rotate the tracker. However, this idea proved unfeasible after research revealed that it would be unrealistic to expect an expansion greater than ⅛'', which would not be able to cause a rotation great enough to move the tracker 180 degrees throughout the day.

Finally, our team looked into the possibility of integrating an active component into a passive tracking system. Although this would technically make the solar tracker partially active, our team was willing to make this sacrifice if it was deemed that an active component would make the solar tracker significantly more reliable in a wider range of temperatures that could be encountered in Kenya.

After considering the various benefits of each tracking system, our team decided to pursue a liquid-based tracking system with a more environmentally friendly liquid than current models on the market, while keeping open the possibility of integrating an active component into the tracker if necessary.

Design Refinement

The initial developers of the liquid-based equilibrium system built their passive solar tracker using non-environmental friendly Freon 12 because of its low boiling point. We decided as a group that it would be pointless to reinvent what already exists currently in the market, because the current system can be easily recreated and wouldn't really benefit our society. We instead choose to dive in a new

direction that hadn't yet been explored due to its complexity. Our team decided to pursue a system or mechanism that can generate enough heat to boil more environmentally friendly liquids that can be used to move the tracker.

Our first step was then to research different kinds of environmentally friendly liquids that we could potentially use for our passive solar tracker. We looked into several different kinds of liquids. We were able to rule out the majority of liquids due to negative environmental effects or a high boiling point, and decided to focus our efforts on four promising liquids, including water, ethanol, benzene, and diethyl ether.

In addition to researching these liquids' environmental effects, economical feasibility, and boiling point, we also looked into azeotrope properties for those liquids with water. Specifically, we looked into the azeotrope properties of the boiling points of the liquids listed above combined with water because the mixture of water and any one of the liquids listed above will tend to decrease its boiling point. After researching the different liquids, we found that most are chemicals, and thus all have potential safety concerns. However, most of the concerns are very preventable if certain precautions are taken and the liquids are not being improperly used. A mixture of water and a liquid also has the advantage of reducing the cost of the liquids being used.

After putting all the liquids into a table and comparing them side by side, we were able to immediately see the advantages and disadvantages of each of the four liquids. We observed that an azeotropic mixture of water and ethanol wasn't that effective, while it was more effective for benzene, lowering the boiling point by 10 degree celsius. On the other hand, an ethanol with azeotropic mixture of water only lowered ethanol's boiling point by 0.3 degree celsius. Water had many advantages to being the liquid incorporated into our passive solar tracker, but a major disadvantage is that the boiling point of water is 100 degree celsius and is higher than the rest of the other three liquids, making it unfavorable to work with due to the higher amount of heat necessary to boil it.

After ruling out water, we looked at benzene, and subsequently decided to eliminate it from contention, due to several studies showing that it can be hazardous to aquatic life. After much debate, we finally decided to move forward with both ethanol and diethyl ether as our liquids of choice. Even though the formation of ethanol causes depletion of Ozone, we decide that the advantages of Ethanol outweighed the disadvantages, since it's more environmentally friendlier than the current liquid, freon 12, that is being used in current passive solar trackers in the market because of its lower boiling point. In addition, ethanol is a relatively common chemical that's available in many areas around the world. We found from our research that diethyl ether has a lower boiling point comparing to the other of liquids being discussed, and it is also relatively safe, as it can evaporate in air. Even though it isn't soluble in the water, this was found to not be dangerous to aquatic lifeforms. We decided to keep both liquids open as options moving forward, due to relative advantages of each.

(Note: The prices for each liquid listed below can change depending on several factors such as data from different sources (industrial corporations versus retail corporations), availability, production rate, etc,.)

Liquid	**Environmental Impact**	**Boiling Point**	**Economical**	Azeotrope mixture of water and different liquids:
Water	None – essential to life	100°C	$1.50 for 1,000 gallons	N/A
Ethanol	Depletion of ozone from it's formation	78.4°C	$2.10-$2.22 per gallon	78.1°C
Benzene	-toxic to aquatic organism -quickly break down in the air	80.1°C	$4.36-4.43 per gallon	69.3°C
Diethyl Ether	- non soluble in water -evaporate quickly in air	34.6 °C	$32.1 per gallon	34.2°C

Table 1 – Liquid Properties

In addition, our team looked into the possibility of depressurizing vessels to reduce the boiling point of the liquids and thus the amount of energy needed to boil them. Theoretically, we found that we could significantly reduce the boiling point of the liquid, with the exact amount depending on multiple variables such as the type of liquid, size of container, and amount of liquid being boiled. However, despite the reduction in boiling point, our team ultimately decided that the negative downsides outweighed the benefits of depressurization. Depressurizing the containers decreased the overall safety and reliability of the system, as the risk of an explosion or failure of the vessel increases dramatically when its contents are under pressure. In addition, if there was a failure, it would be much more difficult to repair on-site in Kenya, since any repair would likely involve welding to create a safe seal, and technical training with advanced vacuums would be necessary to re-depressurize the container. Because of these technical difficulties, our team decided it would be more beneficial to pursue an active component of the tracker in the case that more heat in addition to that provided by the sun is necessary to boil the liquid to move the tracker.

Calculations

Because of the nature of this project, the necessary calculations were somewhat difficult to formulate. To simplify the determination of values, we made several assumptions in the calculations. One of the assumptions we made was that the liquid inside the tracker was already at its boiling point. This made the calculations easier because if this was not assumed, we would also have to factor in the necessary energy needed to raise the temperature of the liquid to its boiling point. This would involve finding the specific heat of the liquid we were using and determining how much energy would be left for the vaporization of the liquid.

Another assumption we made was that the thermodynamic values remained constant throughout the vaporization process. This included the composition of the liquid mixtures as well as the boiling points, enthalpies of vaporization, etc. In reality however, as the mixture began to evaporate, the more volatile component of the mixture would evaporate quicker. This in turn would alter the mol fractions of each component. Because the enthalpy of vaporization is determined from the individual enthalpies of each component, the enthalpy of vaporization of the mixture would change with changes in composition. Thus, it was assumed the mol fractions remained constant. Additionally, in reality, as the liquid evaporated in the tracker, the pressure would increase. The thermodynamic values including boiling point, specific heats, are all functions of pressure and temperature. Technically, as the pressure would increase, the boiling point of the mixture would also increase resulting in greater amounts of energy needed to heat and evaporate the mixture. Thus, it was also assumed that these values remained constant.

Finally, the thermodynamic values we used were given at Standard Temperature Pressure (P = 1 atm, T= 25 C). Without these assumptions, these calculations would have been nearly impossible to figure out.

For our calculations, the three main equations we used are the ideal gas law, the heat transfer equation, and the equation for pressure as listed below. In the thermodynamic calculations, we assumed a certain amount of liquid would evaporate and from that, we calculated the volume needed for the container. We also calculated how much energy would be needed to evaporate the liquid based on given enthalpies of vaporization at STP. We accounted for the wind speed's effect on heat lost to the environment due to forced convection using the heat transfer equation and the heat transfer coefficient for air.

$PV=nRT$ (1)
$Q=hA(T-To)$ (2)
$P=FA$ (3)

To determine the amount of energy that could be absorbed, we said that the sun gave off energy at a rate of 1 kW/m^2. We assumed an hour of time to absorb the energy and we varied the dimensions of the container in order to change the surface area and the amount of energy absorbed. To determine the amount of energy lost to the surroundings, we used the heat transfer equation which accounts for the heat transfer coefficient of air and the temperature difference between the

container temperature and the surrounding temperature. Then, based on the total amount of heat absorbed and lost, the net heat transfer could be determined. If the net heat transfer was not high enough to meet the value of heat needed to evaporate the liquid, we considered how we could get more energy into the system. The results of these calculations are shown in Tables 4 and 5 in the Appendix.

Once the dimensions for the tracker and the amount of liquid were projected, we used the ideal gas law to determine the pressure that would result from the evaporation of the liquid. We have all the values including the volume of the container, the number of moles of liquid used, and the boiling temperature, so finding the pressure was relatively easy. Based on this pressure, we used the pressure equation and the interface area of the liquid to determine the force produced by the pressure. This in turn would be used to determine if there would be enough force to move liquid from one end to the other and tilt the tracker.

When comparing the two liquids we selected, a mixture of ethanol and water or diethyl ether, it can be seen in Tables 2-5 in the appendix that diethyl ether would be the better choice. The table for the ethanol-water mixture is more complex because the values for two liquids are shown as opposed to just one. Diethyl ether has a boiling point of about half that of the ethanol water mixture. Thus, the amount of energy needed to heat the liquid and evaporate it is reflected in the net energy in both calculations. As one can see in Tables 4 and 5, the net energy for the ethanol water mixture is negative, meaning more energy would be lost than gained. Conversely, the net energy for diethyl ether is positive, indicating that more energy would be absorbed, thus making it the better choice.

It is important to note that the overall size of the container is limited by how much liquid we have in the container. Increasing the size of the container increases the heat it can absorb, but it also decreases the pressure that can be generated with the same amount of liquid boiling. We decided to use values of .1 meters for both the radius and the length, as that number provided the smallest overall volume of the container while still fitting the total liquid of approximately 1 liter.

After our thermodynamic calculations, it was apparent that there is still a net gap of energy between the net heat absorbed by the liquid and the total heat required to boil the liquid to completion. For diethyl ether, this number is approximately 50 kJ, the difference between the net heat gained (338 kJ) and the total heat needed to boil the liquid (390 kJ). As a result, another source of energy will be needed to provide this additional heat necessary to boil the liquid.

The last few columns shown in Tables 4 and 5 show the net heat loss in lab conditions. These values do not include heat loss due to forced convection, which would occur in practical conditions due to wind. The average wind speed throughout the day is 3.8 m/s in Kenya. Therefore, it would be easier to boil the liquid in indoor lab conditions. It is important to take this into account when deciding if a future prototype would work in practical conditions outdoors.

Further Design Refinement

Based on the fact that our calculations assumed the liquid was already at the boiling point, we would need another source of heat to actually deliver more energy to heat the mixture before evaporating it. Although increasing the size of the container could generate more heat, we sacrifice the amount of pressure that can be produced by increasing volume. Before looking into the various possibilities on how this heat could be produced, we converted the heat required from kilojoules to watts, assuming that the whole process will happen over 12 hour period of daylight. These calculations can be seen below:

These first calculations have been done using a mixture of Ethanol and water.

Liquid: Ethanol Water

Total energy needed to boil the liquid: 2,131,380 Joules = 2.131 kJ
Power = Energy (joules) / Time in 1 day (seconds)

2131380 J / (12*60*60 seconds) = 49.3375 watts = 50 watts

Note: 50 Watts is required for a real life process where the tracking takes place over a 12-hour span of daylight. The following calculations are for lab conditions where it is convenient to shorten the time period. As a result, more power is required to produce the energy needed.

For our model that is in the lab:

If time = 30 min; Power required = 2131380 J /(30*60 seconds) = 1184 = 1200 watts

An energy source that outputs 1200 watts of power is typically expensive, and thus we lengthened time considered for the whole process to 2 hours.

time(t) = 2 hours = 7200s
Thus power required = 2131380 J / (2*60*60 seconds) = 296.025 watts = 300 watts

Thus if the liquid used is Ethanol Water, then the power needed for the entire process is 300 watts.

We then did the same calculations for Diethyl Ether using the required energy of 390.3274 kJ to boil the liquid.

Liquid: Diethyl Ether

The power required to generate this energy over the span over 12 hours of daylight is:

Power = 390327.4 J /(12*60*60 seconds) = 9.04 = ***10 watts***

The power required to generate this energy over the span of 30 minutes for a lab condition is:

390327.4 J /(30*60 seconds) = 216.85 = ***220 watts***

The required power for heating diethyl ether is significantly lower than that for heating ethanol water, as expected. Thus, we decided to pursue methods that could generate over the required 220 watts of power to boil diethyl ether quickly in a lab.

After research, we determined that there were four different options regarding how this heat can be produced.

1) Wires hooked up to a battery that can carry huge amount of loads using resistors with high amount of resistance:

The way this process works is that a large amount of electricity produced by a high voltage battery passes through a circuit carrying resistors of high resistance. These resistors oppose the flow of electricity, and if the resistors have a high amount of resistance, it would produce a high amount of energy in this process. We could use this heat energy to move the prototype. The circuit that explains this simple process is shown below in **Figure 3**.

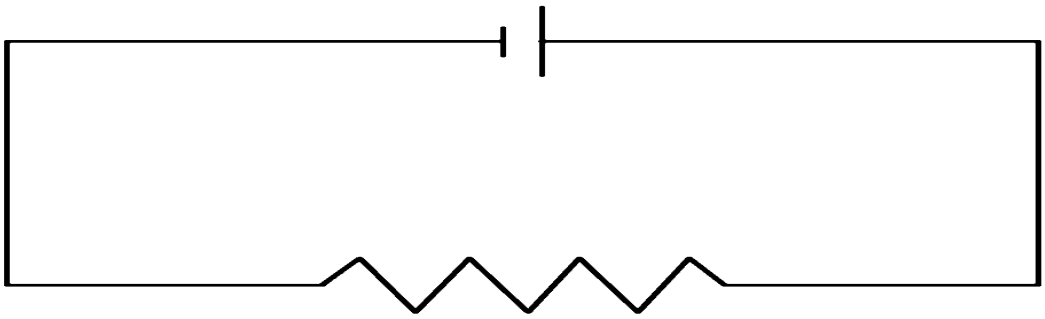

Figure 3 – Example circuit

After careful examination of this process, we came to the conclusion that this is not the most efficient way to go along this process, due to the high cost of high voltage batteries and the fact that they require constant replacement.

2) Batteries:

This was another option that we looked into to produce the additional energy needed. Unlike the other method, for this process we needed another element called the reverse peltier system. This system is used in refrigerators where an applied

temperature difference causes charge in carriers in the materials to diffuse from the hot side to the cold side. We planned to use the reverse of this process to generate heat. This would have been very helpful during the colder months when the ambient temperature is at the lower side.

Another important element to this process is using the battery itself. We planned to get a battery that would produce about 300 watts of power. Thus by using the battery and adding it to the reverse peltier system, a huge amount of energy could potentially be created. We could then use this energy to heat the vessels containing the liquid, thus moving the tracker.

However, after examining this method closer, several problems appeared. One main flaw was that the battery would need constant replacement and it would require a lot of maintenance. This would essentially defeat the purpose of the tracker being self-sufficient and low maintenance, and as a result, is not consistent with our vision. Overall, batteries are a typically inefficient method to produce heat by converting electricity.

3) Using Solar Panels which is further powered by a microcontroller:

This was the final method of generating energy that we looked into. In this method, we planned to fix two solar panels on either side of the tracker that would output about 150 watts of power on each side, thus creating enough energy to heat the liquids and power the tracker. The biggest difference from the other methods explained is that it could make use of any additional energy produced by the extra solar panels that isn't used to heat the liquids. This additional electricity produced could be used to power homes and other elements in Kenya.

However, for the power grid to act efficiently, it needs to be programmed by a microcontroller. Our team planned to use a Pickit 3 microcontroller and program it in such a way that once the right amount of electricity is reached to heat the liquid to its boiling point, any additional amount of power is rerouted to the power grid. Attached is a block diagram shown in **Figure 4** that was designed to implement the use of power so this process is more clear.

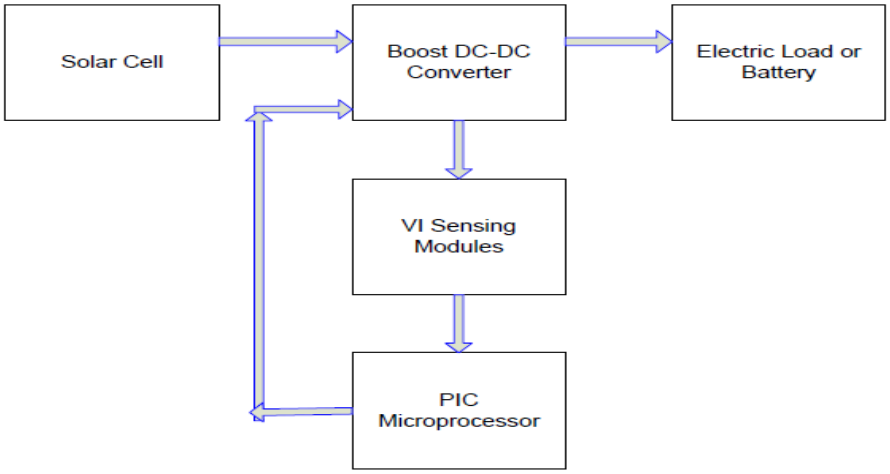

Figure 4 – Power source example

After carefully examining this process and the options available to us, our team decided that we were going to go ahead and use this method to power the tracker since it meets the project's goals and vision to be self-sustainable and efficient.

Design of Prototype

Initially, our team looked into the possibility of creating a working prototype that modeled our passive solar tracker. However, upon discovery that additional heat would be necessary to power the tracker, we did not have enough time left in the semester to construct an advanced technical prototype that could generate the additional necessary heat required to heat the vessels to the liquid's boiling point. As a result, our team focused on building a basic prototype that simply provided a visual model of how the system would work. This model was not built to conduct high temperatures, so any future team working on this project should look into materials that would effectively conduct heat from the additional heat source into the liquid. The basic model that our team constructed can be seen in **Figure 5**.

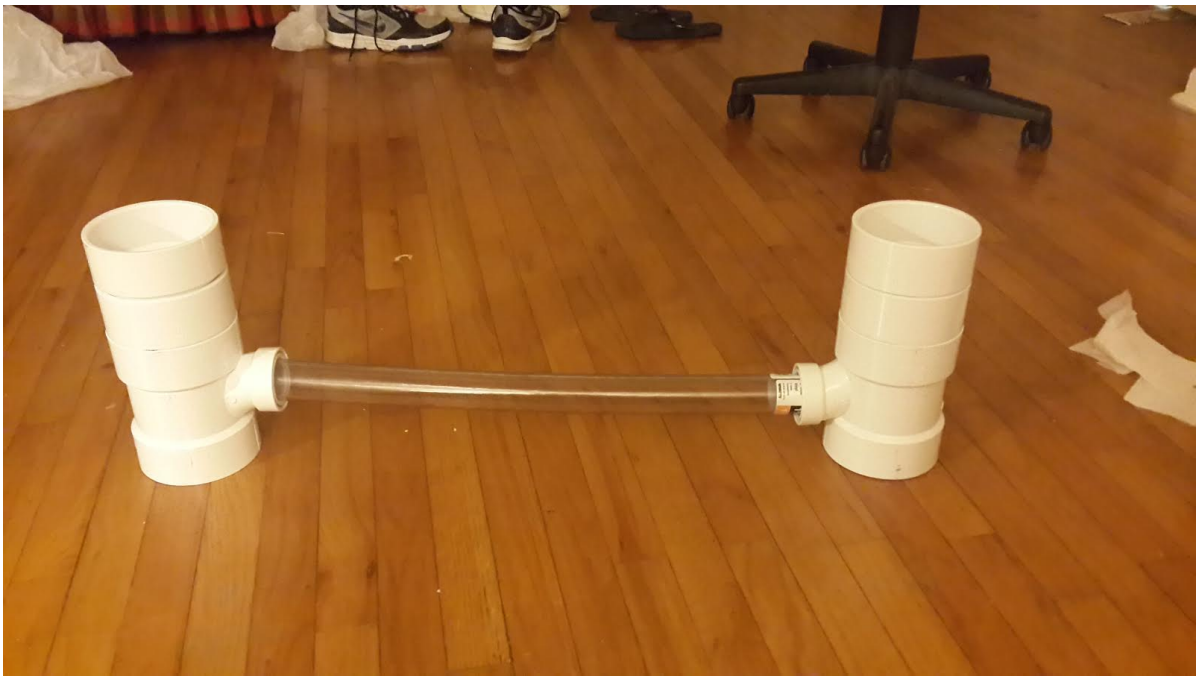

Figure 3 – Design of Prototype

This model demonstrates how the liquids would be held in each vessel, and could move from side to side through a flexible tube connecting the two containers. Ideally, this system could be mounted on a scale or balance system such that the side with more liquid would move down, and the side with less liquid would move up. Unfortunately, due to problems with our budget and getting money refunded to the team, we were unable to purchase a balance that we could attach our system to.

Conclusion and Recommendation

Our team made significant progress throughout the semester in researching and developing a sustainable, economical, and unique passive solar tracker. Even with the time and budget restraints given, we were able to start developing a passive solar tracker that was unlike every other passive tracker on the market today.

Going forward, we recommend that future teams continue to develop a liquid-based equilibrium system, with two photovoltaic cell components providing the additional heat needed to power the tracker. Hopefully, a future team can use the research done by our group this semester to develop a working passive solar tracker prototype that utilizes an additional passive component to help its motion. This tracker has the potential to be more environmentally friendly and reliable than any other tracker currently available, making it a fantastic opportunity to develop a clean, reliable source of energy that we should take full advantage of.

Appendix

Ethanol Water Constants			
Energy From Sun	1	kW/m^2	kJ/m^2 s
Mole Fraction H20	0.2		
Mole Fraction EtOH	0.8		
B.P. Mixture	351.5	K	78.35
Hvap Water	41.5	kJ/mol	
Hvap Ethanol	38.5	kJ/mol	
Hvap Mixture	39.1	kJ/mol	
Mass Water	0.2	kg	
Mass Ethanol	2	kg	
Density Water	972.79	kg/m^3	
Density Ethanol	740.04	kg/m^3	
Volume Water	0.000206		
Volume Ethanol	0.002703		
M.W. Water	1.80E-02	kg/mol	
M.W. Ethanol	4.61E-02	kg/mol	
Mol Water	11.09878	mol	
Mol Ethanol	43.4122	mol	
Total Mols	54.51098	mol	
Mol Fraction Water	0.203606		
Mol Fraction EtOH	0.796394		
Time	3600	s	
Solar Energy	3600	kJ/m^2	
Total Energy Needed to Evaporate Mixture	2131.379	kJ	
Wind Speed	3.8	m/s	
Ambient Air Heat Transfer Coefficient	26.14359	J/m^2*s*K	
Ambient Air Heat Transfer Coefficient	0.026144	kJ/m^2*s*K	
Ambient Air Heat Transfer Coefficient	94.11692	kJ/m^2*K	
Ambient Air Temperature	25		
Temperature Difference	53.35		
Lab Air Heat Transfer Coefficient	10.45	J/m^2*s*K	
Lab Air Heat Transfer Coefficient	0.01045	kJ/m^2*s*K	
Lab Air Heat Transfer Coefficient	37.62	kJ/m^2*K	

Table 2 - Ethanol Water Constants

Diethyl Ether Constants			
Energy From Sun	1	kW/m^2	kJ/m^2 s
Ambient Temp.			
Average Wind Speed	3.8	m/s	
Boiling Point Diethyl Ether	307.8	K	34.65
Enthalpy of Vaporization Diethyl Ether	27.25	kJ/mol	
Ambient Air Heat transfer coefficient	26.14358869	J/m^2*sK	0.02614
Temp.(Hot)	34.65	C	
Mass Diethyl Ether	0.75	kg	
Ambient Temperature	25	C	
Density Diethyl Ether	713.4	kg/m^3	
Volume DE Evaporated(m^3)	0.001051304		
Volume DE Evaporated(L)	1.051303616		
Molecular Weight Diethyl Ether	7.41E-02	kg/mol	
Total Liquid Volume of DE in container	2.103		
Mols Diethyl Ether	10.11872639	mol	
Volume of Container	4.205214466		
Total Mols	10.119	mol	
Time	3600	s	
Solar Energy	3600	kJ/m^2	
Total Energy Needed to Evaporate Mixture	275.7352941	kJ	
Air Heat Transfer Coefficient	94.11691928	kJ/m^2*K	
Lab Air Heat Transfer Coefficient	10.45	J/m^2*s*K	
Lab Air Heat Transfer Coefficient	0.01045	kJ/m^2*s*K	
Lab Air Heat Transfer Coefficient	0.105740691	kJ/m^2*K	

Table 3 - Diethyl Ether Constants

Radius (m)	Length (m)	Surface Area (m^2)	Volume (m^3)	Qin	Qloss	Qnet	% Qloss	Qloss(Lab)	Qnet Lab	% Qloss
0.05	0.05	0.031415927	0.000392699	113.10	157.7437	-44.65	0.58	63.05	50.04	0.36
0.1	0.1	0.125663706	0.003141593	452.39	630.9748	-178.59	0.58	252.21	200.18	0.36
0.15	0.15	0.282743339	0.010602875	1017.88	1419.693	-401.82	0.58	567.47	450.40	0.36
0.2	0.2	0.502654825	0.025132741	1809.56	2523.899	-714.34	0.58	1008.84	800.72	0.36
0.25	0.25	0.785398163	0.049087385	2827.43	3943.592	-1116.16	0.58	1576.32	1251.12	0.36
0.3	0.3	1.130973355	0.084823002	4071.50	5678.773	-1607.27	0.58	2269.89	1801.61	0.36
0.35	0.35	1.5393804	0.134695785	5541.77	7729.441	-2187.67	0.58	3089.58	2452.19	0.36
0.4	0.4	2.010619298	0.20106193	7238.23	10095.6	-2857.37	0.58	4035.37	3202.86	0.36
0.45	0.45	2.544690049	0.286277631	9160.88	12777.24	-3616.35	0.58	5107.26	4053.62	0.36
0.5	0.5	3.141592654	0.392699082	11309.73	15774.37	-4464.64	0.58	6305.26	5004.47	0.36
0.55	0.55	3.801327111	0.522682478	13684.78	19086.99	-5402.21	0.58	7629.37	6055.41	0.36
0.6	0.6	4.523893421	0.678584013	16286.02	22715.09	-6429.08	0.58	9079.58	7206.44	0.36
0.65	0.65	5.309291585	0.862759882	19113.45	26658.68	-7545.23	0.58	10655.89	8457.56	0.36
0.7	0.7	6.157521601	1.07756628	22167.08	30917.76	-8750.69	0.58	12358.31	9808.77	0.36
0.75	0.75	7.068583471	1.325359401	25446.90	35492.33	-10045.43	0.58	14186.84	11260.06	0.36
0.8	0.8	8.042477193	1.608495439	28952.92	40382.38	-11429.47	0.58	16141.47	12811.45	0.36
0.85	0.85	9.079202769	1.929330588	32685.13	45587.93	-12902.80	0.58	18222.21	14462.92	0.36
0.9	0.9	10.1787602	2.290221044	36643.54	51108.96	-14465.42	0.58	20429.05	16214.49	0.36
0.95	0.95	11.34114948	2.693523001	40828.14	56945.47	-16117.33	0.58	22761.99	18066.14	0.36
1	1	12.56637061	3.141592654	45238.93	63097.48	-17858.54	0.58	25221.05	20017.89	0.36
1.05	1.05	13.8544236	3.636786196	49875.92	69564.97	-19689.04	0.58	27806.20	22069.72	0.36
1.1	1.1	15.20530844	4.181459822	54739.11	76347.95	-21608.84	0.58	30517.46	24221.65	0.36

Table 4 - Ethanol Water Calculations

Radius (m)	Length (m)	Surface Area (m^2)	Volume (m^3)	Volume (L)	Heat In	HeatLoss	NetHeat DiEthyl Ether	% Qloss	Qloss(Lab)	Qnet Lab	% Qloss
0.05	0.05	0.0314	0.0004	0.3927	113.10	28.53283	84.56	0.20	0.03	113.0653	0.000283
0.1	0.1	0.1257	0.0031	3.1416	452.39	114.1313	338.26	0.20	0.13	452.2611	0.000283
0.15	0.15	0.2827	0.0106	10.6029	1017.88	256.7955	761.08	0.20	0.29	1017.588	0.000283
0.2	0.2	0.5027	0.0251	25.1327	1809.56	456.5253	1353.03	0.20	0.51	1809.044	0.000283
0.25	0.25	0.7854	0.0491	49.0874	2827.43	713.3208	2114.11	0.20	0.80	2826.632	0.000283
0.3	0.3	1.1310	0.0848	84.8230	4071.50	1027.182	3044.32	0.20	1.15	4070.35	0.000283
0.35	0.35	1.5394	0.1347	134.6958	5541.77	1398.109	4143.66	0.20	1.57	5540.199	0.000283
0.4	0.4	2.0106	0.2011	201.0619	7238.23	1826.101	5412.13	0.20	2.05	7236.178	0.000283
0.45	0.45	2.5447	0.2863	286.2776	9160.88	2311.159	6849.72	0.20	2.60	9158.288	0.000283
0.5	0.5	3.1416	0.3927	392.6991	11309.73	2853.283	8456.45	0.20	3.21	11306.53	0.000283
0.55	0.55	3.8013	0.5227	522.6825	13684.78	3452.473	10232.30	0.20	3.88	13680.9	0.000283
0.6	0.6	4.5239	0.6786	678.5840	16286.02	4108.728	12177.29	0.20	4.62	16281.4	0.000283
0.65	0.65	5.3093	0.8628	862.7599	19113.45	4822.049	14291.40	0.20	5.42	19108.03	0.000283
0.7	0.7	6.1575	1.0776	1077.5663	22167.08	5592.435	16574.64	0.20	6.28	22160.79	0.000283
0.75	0.75	7.0686	1.3254	1325.3594	25446.90	6419.887	19027.01	0.20	7.21	25439.69	0.000283
0.8	0.8	8.0425	1.6085	1608.4954	28952.92	7304.405	21648.51	0.20	8.21	28944.71	0.000283
0.85	0.85	9.0792	1.9293	1929.3306	32685.13	8245.989	24439.14	0.20	9.26	32675.87	0.000283
0.9	0.9	10.1788	2.2902	2290.2210	36643.54	9244.638	27398.89894	0.20	10.39	36633.15	0.000283
0.95	0.95	11.3411	2.6935	2693.5230	40828.14	10300.35	30527.78554	0.20	11.57	40816.57	0.000283
1	1	12.5664	3.1416	3141.5927	45238.93	11413.13	33825.80115	0.20	12.82	45226.11	0.000283
1.05	1.05	13.8544	3.6368	3636.7862	49875.92	12582.98	37292.94577	0.20	14.14	49861.79	0.000283
1.1	1.1	15.2053	4.1815	4181.4598	54739.11	13809.89	40929.2194	0.20	15.52	54723.59	0.000283

Table 5 - Diethyl Ether Calculations