PennState College of Engineering | ENGINEERING DESIGN, TECHNOLOGY, AND PROFESSIONAL PROGRAMS

Technical Memorandum
No. EDSGN 100.001

Date: April 25, 2016

To: Lockheed Martin Corporation

From: EDSGN100 Section 001
Squirrels Pants Soup-a-Stars
Shirley Banh
Dylan Kolb
Utsav Patel
Nicole Song

Subject: Penn State University
EDSGN 100: Introduction to Engineering Design
Client-Driven Design Project, Spring 2016

Purpose.

The purpose of this project is to redesign a USB Hub Mounting Bracket used as a debug and auxiliary mounting device for a custom avionics mission system. The new USB Hubs will provide greater capability for the avionics technician through an increased capacity of connections and allow for installation in various areas on the platform. The primary goal of this project is to reduce the total number of parts for this assembly and provide a vertical installation configuration. [1]

Background.

To make a vertical mount for the USB HUB, several criteria is highlighted below:

– From a 4 port hub To a 7 port hub

– From Horizontal mount To Vertical mount

– New cable retention for usb cables and power

- From single usb hub to stacked 3 high

– Environment 0 to +25C

– Must show that new bracket can survive vibration loading [2]

Sponsor.

Lockheed Martin is a global security and aerospace company that is based in Bethesda, MD and is principally engaged in the research, design, development, manufacture, integration and sustainment of advanced technology systems, products and services. Under Marillyn A. Hewson

as CEO (Chief Executive Officer), majority of their business operations is based upon global security, aerospace technologies, advanced materials and manufacturing, and information technologies. With this much of the business that is conducted with Lockheed Martin is with the US Department of Defence and the US federal agencies.

Project Description.

The projects that were given as part of an expansion on Additive manufacturing (AM) within five different areas of interest. The projects that has been presented is additively manufactured heat exchangers, a sensitive payload shock absorber, connector backshells, a USB Hub mounting bracket and the option of looking into current Lockheed Martin product and suggest improvements. For the heat exchangers, there needs to redesign portions so that there is a possible AM process that allows coast and build time to be cut and the possibility of using plastic additives to be incorporated into the design and the surface area stays the same, however the geometry of the overall heat exchanger and the fins can be changed. The shock absorber for unmanned aerial vehicles needs to withstand multiple landings, for it to bend would be acting as levers and fastener holes, the AM process needs to be faster that what it currently is and is able to be built domestically and has to be able to be lighter, and withstand more payload and fly longer with it attached. The connector backshells are a limitation of its inability to separate signals coming from electronic components and assembly and has sharp edges that can cause the degradation of wires and signal loss in the future. The requirements of this project is to have a single port, multi-port backshells, compatibility with micro-D and D-sub connectors and is able to prevent chaffing of the internal parts of the backshell. The USB bracket needs to be able to hold a 7 port hub, a vertical mount, a cable to retain power, able to hold a single hub to 3 hubs high, operational from 0-25 C and is able to survive vibration loading. The open-ended project allows the prototype to reduce weight, part count, easier assemblies, and improved performance.

Procedures.

1. Measure the height of the hubs that is needed to be mounted.
2. Side Brackets are to be measured and scaled accordingly.
3. As the length of the USB body should be the same, it also needs to be accounted for.
4. On the side brackets, which is to be mounted to the wall or to a flat surface, the assumption is that this is to be screwed into the wall with a screw that is of appropriate length and size. For this prototype, this was not accounted for, however changing these dimensions is fairly straightforward. So other designs to mount the bracket to the wall is based upon how tightly and tell this needs to be to the wall. (Figure 4.)
5. With the appropriate side mounting brackets size and the number USB hub, the length of the mount for the screw can be manipulated to have more holes and longer so that the USB can be screwed into the bracket and be able to hold the necessary amount of USB hubs. (Figure 1.)
6. The power cords that is necessary to power the hub will be coming out of the bottom or to the side, under the side brackets as this is something that can be manipulated with the manufactured design of the USB hub and the outlined size constraints. In this

project, we are assuming that the wall is perfectly vertical and has no curvature to where it is being mounted.

7. To determine that material of the bracket, to keep the cost fairly low and within the operational temperatures, the material has to be lightweight, and have a fairly high glass transition temperature as an upper limit for temperatures is not specified. This material should also not be brittle or too rubbery as this can have adverse effects when struck or when heated up rapidly if the USB hub isn't working correctly. The criteria of not having it be too brittle is based upon the vibration requirement that is stated within the stated within the project description. A material that is suggested to make the body of the shell is that of Acrylonitrile butadiene styrene (ABS) as it has a operational within that temperature range and doesn't truly have a melting point and the production cost of the plastic isn't as high as a high-performance plastic. [3] However because there are no other material specifications, then any plastics with varying degrees of amorphous or crystalline structures can be used as long as it is not too brittle nor too amorphous at a given point in time.

Results and Discussion.

Findings: Information was gathered about the dimensions of the USB hub and its bracket from multiple sites on the web and the sample model shown to us by the instructor in class.The dimensions of the USB HUB decided to were 100mm(length)x50mm(height)x20mm(depth).The dimensions of the USB drives decided to be made for the project were 8mm(length)x4mm (width). It was determined that the hub would be vertically mounted to a wall with the help of brackets. The USB hub would be vertically mounted in order to maximize the number of usb drives it could hold. Two brackets would be attached to the edges of the hub. The brackets had a hole in each of them which was slightly larger than the size of the nails or screws attached to it. Additional attachments like cable wires would be made on the USB hub so as to maximize the utility of the USB hub.

Results:We were able to create the USB hub and the brackets using 3d Parts in solidworks.The HUB and the brackets were mated together.They were held together by screws of diameter 2mm made using revolve and sweep as another 3d part.Assembling them, the entire solidworks file was created. The solidworks file was converted into .stl file and then to a makerbot file and sent to the Penn State Maker Commons for a model to be created out of this design. The dimensions of the model would be the dimensions of the design in the solidworks file.The model given to us by the maker commons resembled a beautiful, vertical mounted USB HUB unlike the ones normally found in the market.

Evaluation: We got a USB HUB which was better than a normal horizontal hub in many ways:

1)The vertical mount made it possible to stack 7 usb drives instead of the typical 4 usb drives in the same space and the same cost.

2)We were able to create additional features on the USB HUB because the vertical mount gave more space than the typical horizontal mount.

3) The spectacular design of the brackets and light weight of the hub made it possible for the hub to be placed a anywhere.If the user, by any chance did not like the location of the USB Hub within the current location, one would just unscrew it and change its location. Thus the USB HUB created was very portable.

4) The brackets were made up of plastic. The plastic would sure work in temperature 25 degrees Celsius and below. It is suggested that any plastic that is not brittle or too amorphous to be used as the bracket as the mechanical properties may be unfavorable at that particular temperature and at a given environment.

5) Since pastics are strong solids , there would be no effect of vibration on it.It would tolerate strong vibrations from stuff falling onto it by accident or the normal vibrations caused by the current flowing in the HUB.

Conclusions and Recommendations.

With the prototype and the proposed diagram as shown in figures 4 and 1 respectively, we are able to make different changes and provide different sizes that can be scaled to the USB hubs themselves. For that matter, the versatility and the stability that it is able to provide is makes it theoretically viable, however with data such as how much vibration that it experiences upon aeronautical applications is not known. The goal for this project was to produce a design for the bracket that is able to hold 1-3 USB hubs, with appropriate scaling of the “arms” this is able to be created. A recommendation that we would like to put out is the orientation of the wires that is to be connected to a computer. We think it is best for the wires to be coming out of either the right or left side of the USB hubs and right underneath the arms of the bracket. However we may not have that much control over the design of the hub itself, this is our suggestion based upon figures 2 and 3. With the vertical mounting, where the wire goes is entirely up to the application that it is best suited for. While we may not know the full specifications of what and where the bracket’s environment will be, we would like to offer our services and help for new projects you would like for us to take on. With this we would like to thank representatives of Lockheed Martin for allowing us to have the opportunity to create this interesting project for our team. For additional information, it would be best to contact Shirley Banh through email, sqb5514@psu.edu.

References.

[1] Lockheed Martin: *Statement of Work*, EDSGN 100: Intro. To Engineering Design Spring 2016 Client-Driven Design Project. File name: PennState_LM_Project_listing v2.pdf

[2] PSU Freshman Design Effort - LM Overview v2.pdf, Project Kick Off Meeting, 14 March 2016.

[3] Statasys. ABS. <http://www.nrri.umn.edu/NLTC/ABS07.pdf>

Attachments.

Figure 1. Conceptual diagram of vertical mount USB hub

Figure 2. Original heat exchanger and Specifications of Parts

Figure 3. Nominal Prototype and Specifications of Parts

Figure 4. 3D printed prototype of bracket with variation of screws and side bracket length.

*****

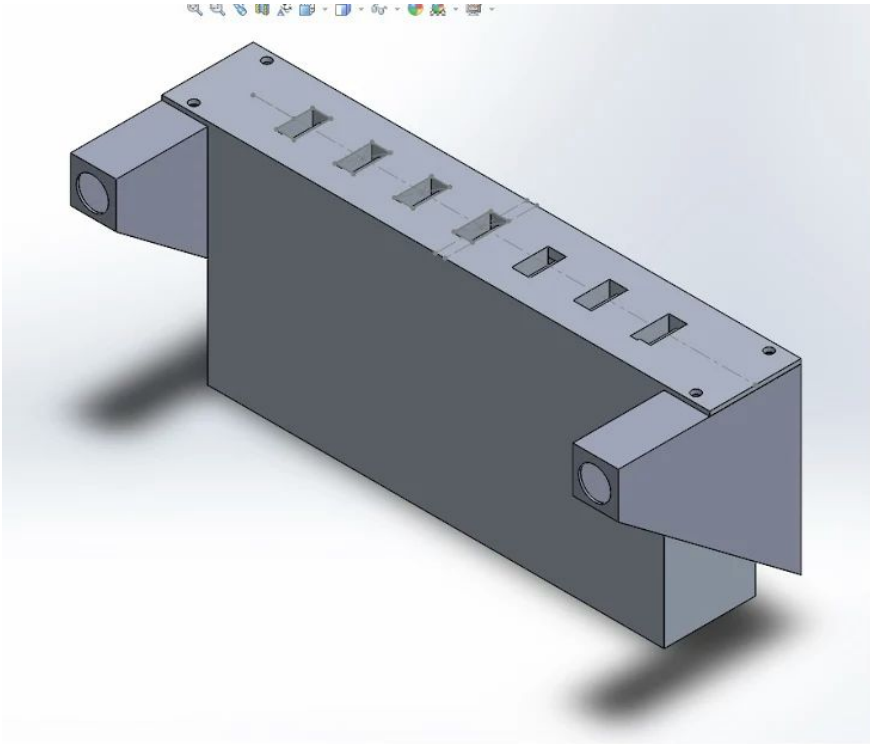

Figure 1. Conceptual diagram of vertical mount USB hub

Figure 2. Typical heat exchanger

Original Concept:

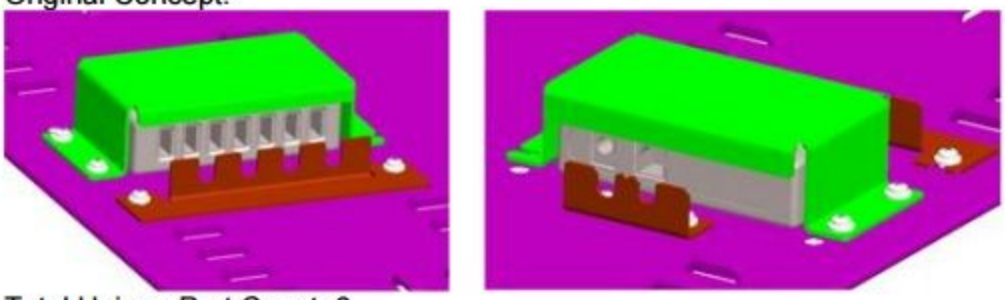

Total Unique Part Count: 6
Total Part Count: 27

- Base Hub Enclosure: Qty 1
- Power Retention Bar: Qty 1
- USB Retention Bar: Qty 1
- Screw: Qty 8
- Washer: Qty 8
- Lock Washer: Qty 8

Figure 2. Original heat exchanger and Specifications of Parts

Notional Prototype for dual-stacked, 4-port Hub:

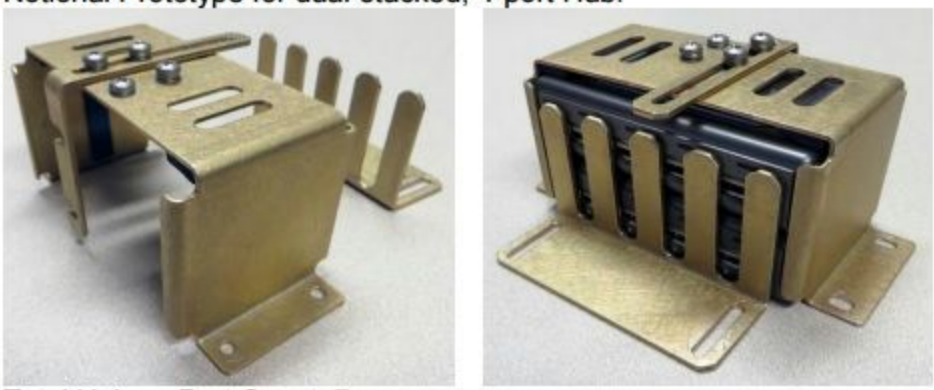

Total Unique Part Count: 7
Total Part Count: 38

- Base Hub Enclosure: Qty 1
- Power/USB Up-link Retention Bar: Qty 2
- USB Retention Bar: Qty 1
- Screw: Qty 10
- Washer: Qty 10
- Lock Washer: Qty 10
- Nuts: Qty 4

Figure 3. Nominal Prototype and Specifications of Parts

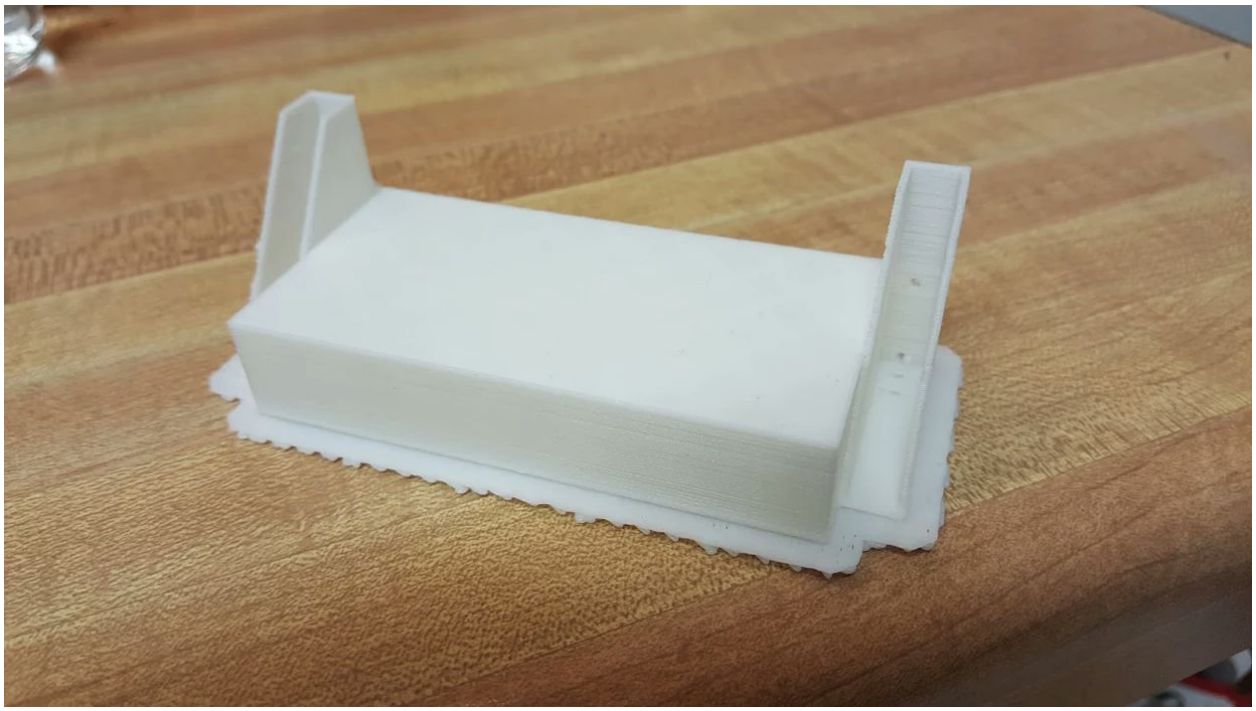

Figure 4. 3D printed prototype of bracket with variation of screws and side bracket length.