Dylan Fantini

Personal CAD Project: Brake Disk

Top

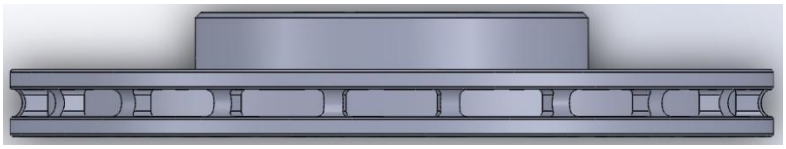

Front

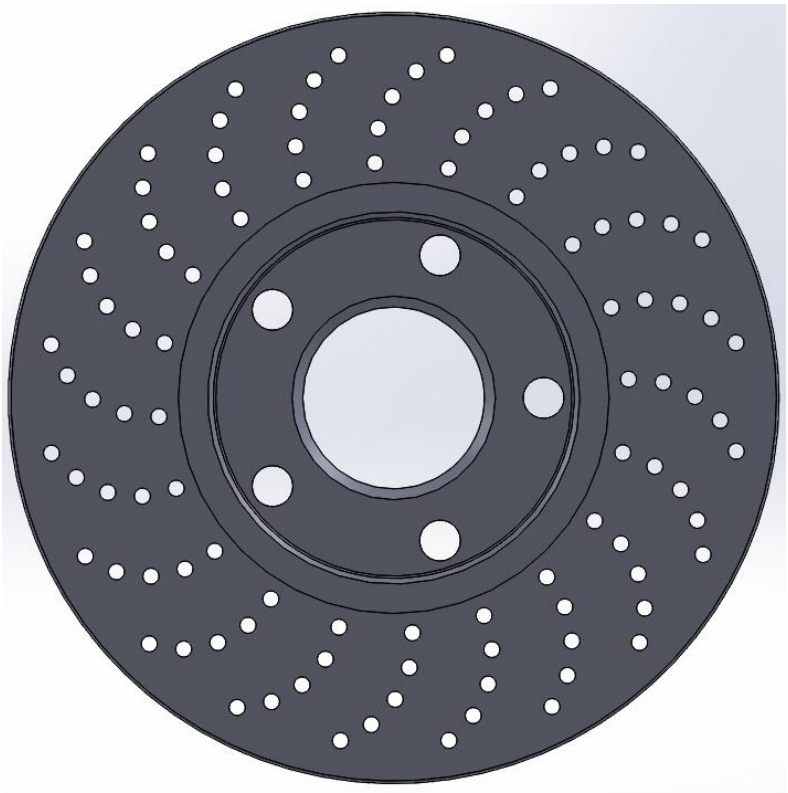

Right

Dimensioning

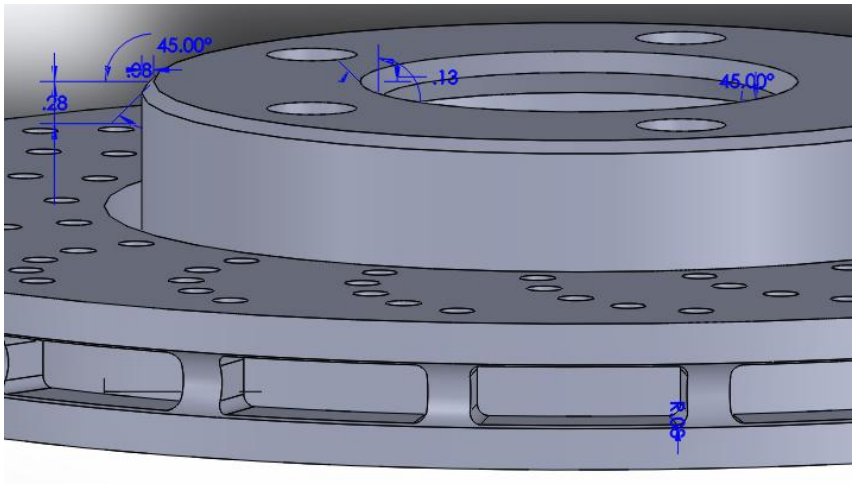

This is the top view of the product at a slight slant showing dimensions.

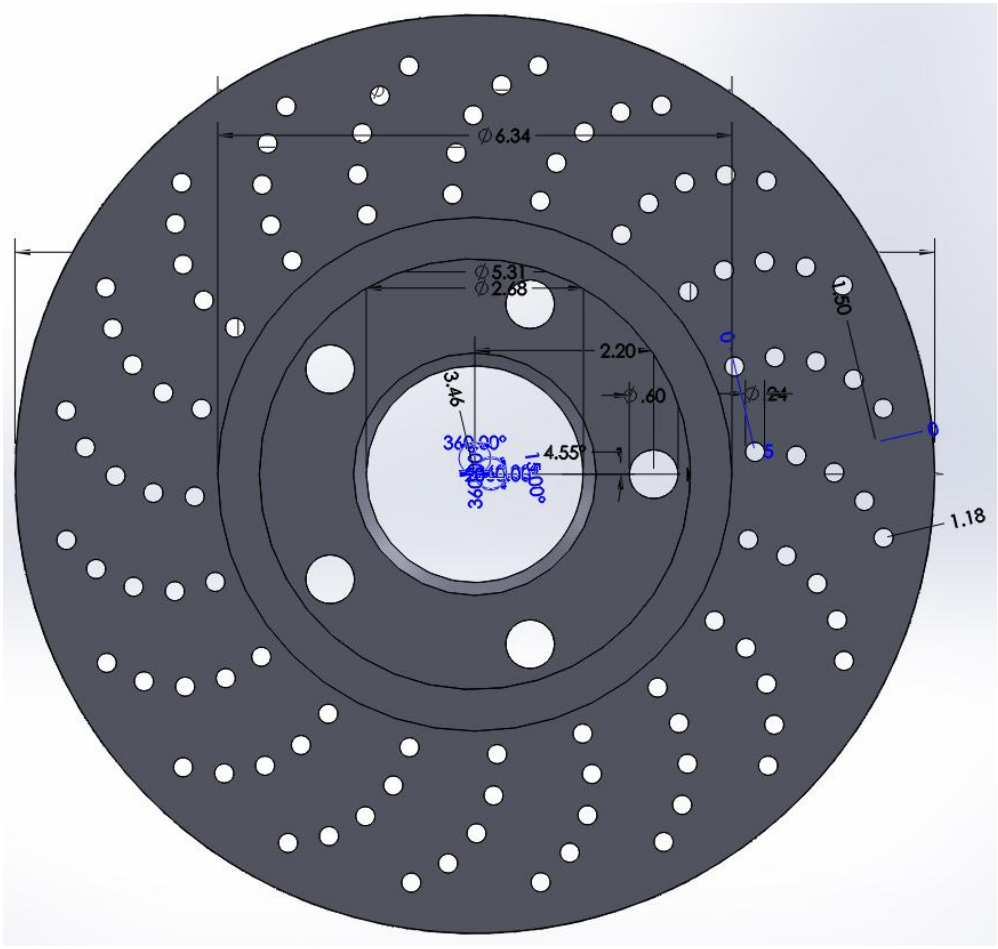

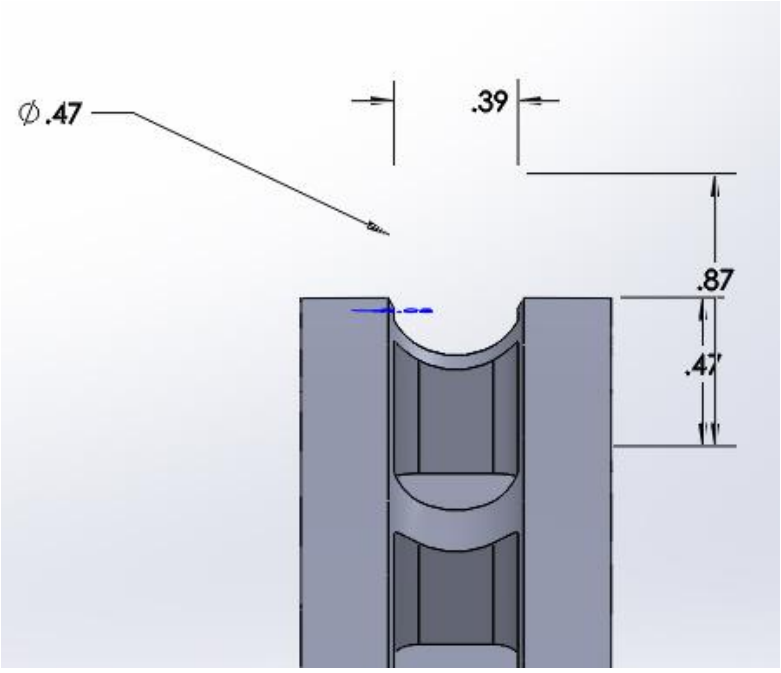

This is the dimensioning on the right hand side.

Isometric

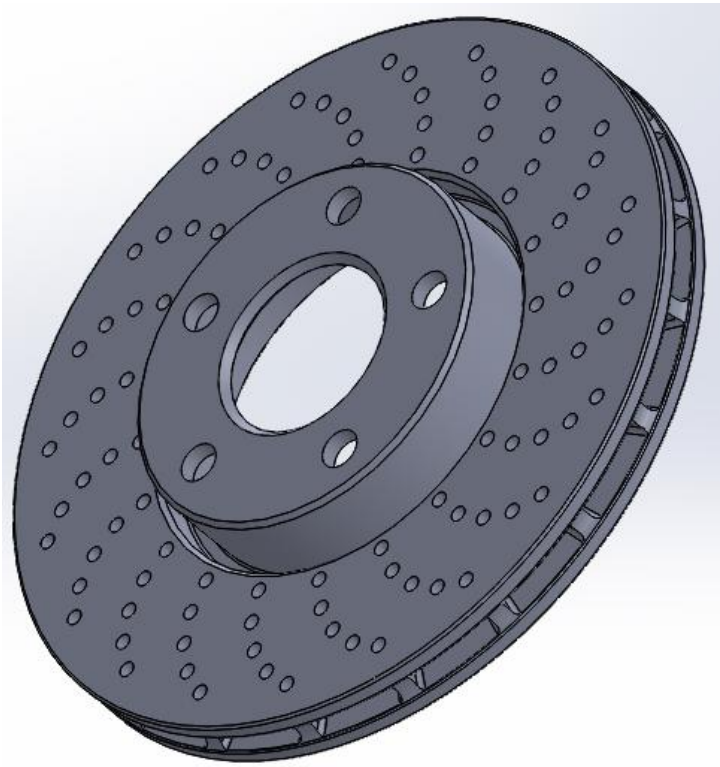

For my personal CAD project I decided to design a brake disk. I chose this type of object because my dad and I recently purchased one for my car and I have been fascinated by them ever since. The smooth metal feel of it and the complexity put into it really blows my mind. Everything on it has a purpose. This picture below is the brake package that my dad and I bought last Christmas that encouraged me to do this project.

http://www.mamotorworks.com/corvette-1-0-10380.html

For me the most difficult part of this product was creating the curved wholes on the front face of the object. In order to do this, I had to draw a series of centerlines. Once I did this, I then put a whole with a specific diameter of .1 inches and the end of the line. Then I put 5 of them along the centerline curve using the curve driven pattern tool. After that I used the circular pattern tool and rotated it about the centerline axis 20 times. I would say this was the most difficult part of the project because I had the least amount of experience using these types of tools. The image below shows this part that was difficult for me.

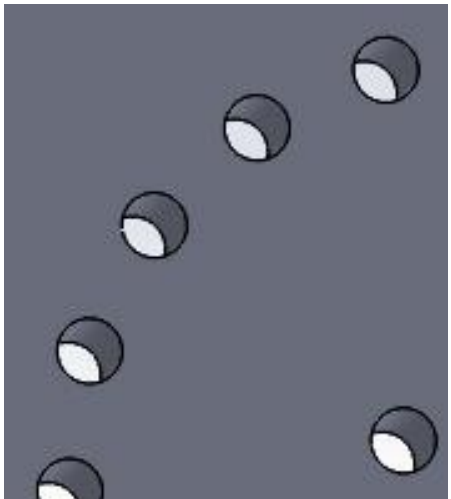

My dad and I have always been car guys. In engineering, engineers are always trying to come up with new ways to make everything more efficient. This is the latest in brake disk design and is the most efficent model yet. I hope to eventually build one myself for my own car in the future.

A lot of the things that I used to design this project were already shown in the tutorials and the CAD 1 through 6 drawings. However, there were a few thing in this project that were difficult for me and it forced me to explore Solidworks for a solution. In some circumstances, I searched the web to try to figure out a step that I was stuck on. This project for me was very fun. It was fun to work on because it is something that I am interested in and I really wanted to see the final product when it was done.

Solidworks is truly an amazing program. The amount of items that can be created are infinite. Whether it is a plane or a brake disk, solidworks is the program to use.

The picture below is a type of model that I used to help create my project. My design is a bit different to add my own flare to it but it is pretty much the same concept.

http://www.bing.com/images/search?q=brake+disk&FORM=HDRSC2#view=detail&id=86322640BB73E750F77FF49ACD324068809FF294&selectedIndex=258