EDSGN 100

Introduction to Engineering Design

Section 10, Team #1

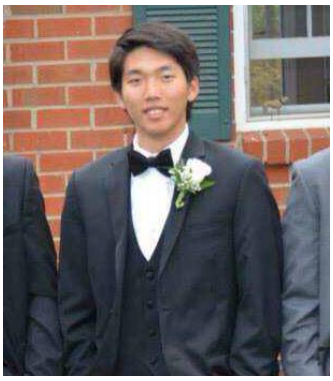

Submitted by:From Left to Right, Sachin Aji Bhaskar , William Clark,YoungSoo Park and Dylan Johnson

Submitted to: Xinli Wu

Submission Date:3/23/2015

FIG. 1. Image of Cart Prototype

URL:www.personal.psu.edu/sba5165/edsgn100_section10_team1_dp1.pdf

Table of Contents

Abstract……..…….Pg. 4 (William Clark)

Introduction……..…….….Pg. 4 (William Clark)

Description of Design Task…….…...Pg. 4 (Sachin Aji Bhaskar)

- **Problem Statement……...……..Pg.4 (Sachin Aji Bhaskar)**
- **Mission Statem…….……...Pg.4 (Sachin Aji Bhaskar)**
- **Design Specifications……...Pg.4 (Sachin Aji Bhaskar)**

Design Approach……...Pg. 5-7

- **Gantt Chart……..Pg.5(William Clark)**
- **Customer Needs Assessment……..Pg.5(Sachin Aji Bhaskar)**
- **Concept Generation…….Pg.6 (Team)**
- **Design Matrix……..Pg.6-7 (Team)**

Final Design & Prototype……....Pg.8-13(Dylan Johnson)

- **Working Drawings ...……Pg. 8-10(Dylan Johnson)**
- **Exploded Drawing and View……Pg. 11-12 (Dylan Johnson & Sachin Aji Bhaskar)**
- **Prototype……Pg. 13 (Dylan Johnson)**

- **Design Features…….Pg.13 (Team)**
- **Operation Instructions……Pg. 14 (William Clark)**

Engineering Analysis……Pg.14 (Team)

- **Working Mechanism……Pg.14 (William Clark)**
- **Cost Analysis……..……Pg.14 (Dylan & William)**
- **Conclusion……Pg. 15 (YoungSoo)**

Acknowledgments……Pg. 15(Team)

References……Pg. 15 (Team)

Abstract

Our goal from the start was to create a lightweight, folding shopping cart. Creating a design that can hold up to 100 pounds but still being lightweight and foldable was not easy. We had to make sure it was portable and was easy enough to use for anyone to be able to use it. In the end, we came up with a very simple design that fit our specifications and can benefit anyone.

(William Clark)

Introduction

Designing a model for a folding shopping cart was not an easy task. It took hours of planning, drawing, and building until we were finally able to come up with the perfect design. With this creation, no one will have to carry their groceries from the store to their apartment or house ever again. This lightweight, portable design is light enough for even the weakest of people and can fold to fit in pretty much any place imaginable. With support up to 100 pounds, weight will never be a problem for this car. Even better, this folding cart can be bought for under a mere $50.

(William Clark)

Description of Design Task

1) Problem Statement:

Old people without cars cannot transport their groceries from one place to another with ease in portability. The cart to be designed needs to be able to carry over hundred pounds, cost less than fifty dollars to make and be easily usable by normal people.

(Sachin Aji Bhaskar)

2) Mission Statement:

To design a foldable shopping cart for people without cars, or for long distance transfer of groceries from one place to another which would be easy to store as well. It should be cost efficient and meet all the guidelines specified.

(Sachin Aji Bhaskar)

3) Design Specifications:

-Easy to operate

-Can fold together for easy storage

-Should not cost more than $50

-Can hold up to 100 pounds

(Sachin Aji Bhaskar)

Design Approach

1. Gantt Chart

	W1:1/26	W2:2/2	W3:2/9	W4:2/16	W5:2/23	W6:3/2	W7:3/16
Information gathering including customer need assessment							
Brainstorming/Concept generation							
Concept selection							
Working Drawing							
Prototyping and testing							
Project documentation and presentation							

(William Clark)

http://www.engr.psu.edu/xinli/edsgn100/Project%20I%20Time%20Line.pdf

2) Customer Needs Assessment:

In order to make our product customer-friendly, we collected data on preferences of different people, so that we can come up with a product that is universally acceptable and easy to use.

#	Customer Statement	Needs Statements
1	"It should be small enough to store in a closet"	The cart should be foldable and compact so as to be small enough to store in small places like closets
2	"It needs to light enough to be portable and pick up by hand"	The materials used will be light weight such as PVC pipes instead of metals.
3	"The cart should be easily maneuverable"	The wheels designed will be such that the cart will be able to move in all directions freely without any difficulty

Table 1 - Customer needs

(Sachin Aji Bhaskar)

3) Concept Generation

Based on the customer needs, each team member came up with ideas to add-in to the final shopping cart.

Ideas	Votes
Shopping cart with facility of a chair	4
Motorized shopping cart	0
Waterproof shopping cart	4
Instantaneous Brake System	2
All terrain wheels/ Stairs climber	1
Cart + Walker for old people	3
Mechanism to make the cart upright by a kick	1
Multiple Compartments for separation of goods	3

Table 2 - Concept generation

(Team)

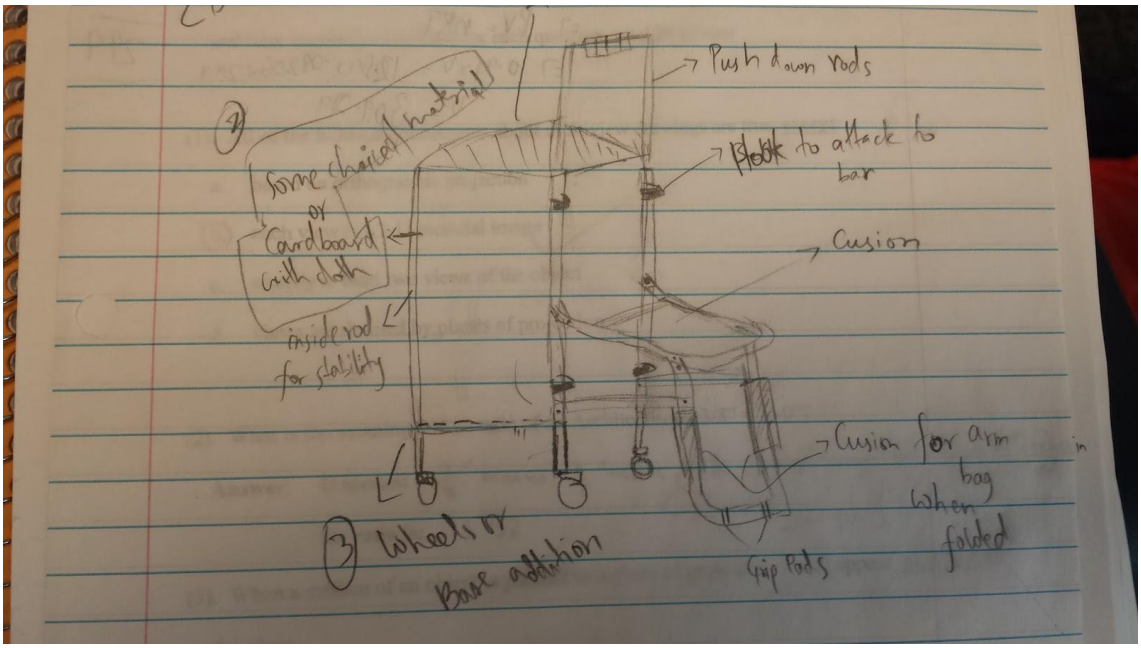

FIG. 2. Design 1 (Chair+ Backpack)

4) Design Matrix

After the concept generation, we have picked the four ideas with the most votes to look at more carefully. We use (+), (0) and (-) for above standard, neutral and below standard respectively, for comparing it to a classical shopping cart. By this method we will finalize which design we will choose for the next process in making the cart.

Shopping Cart Matrix	**Control Design**	**Design 1 (Chair + Backpack)**	**Design 2 (Collapsible)**	**Design 3 (The X-Frame Cart)**	**Design 4 (Bike Cart)**
Capacity	**(+)**	**(-)**	**(0)**	**(+)**	**(0)**
Ease of Use	**(-)**	**(-)**	**(0)**	**(+)**	**(-)**
Cost	**(-)**	**(0)**	**(0)**	**(0)**	**(-)**
Aesthetics	**(0)**	**(+)**	**(0)**	**(0)**	**(+)**
Durability	**(+)**	**(0)**	**(0)**	**(+)**	**(+)**
Uniqueness	**(-)**	**(+)**	**(+)**	**(+)**	**(+)**
Safety	**(0)**	**(+)**	**(-)**	**(0)**	**(-)**
Total	**-1**	**+1**	**0**	**+4**	**+1**
Rank		**II**	**IV**	**I**	**III**

Table 3 - Design Matrix

(Team)

Final Design & Prototype

Working Drawings

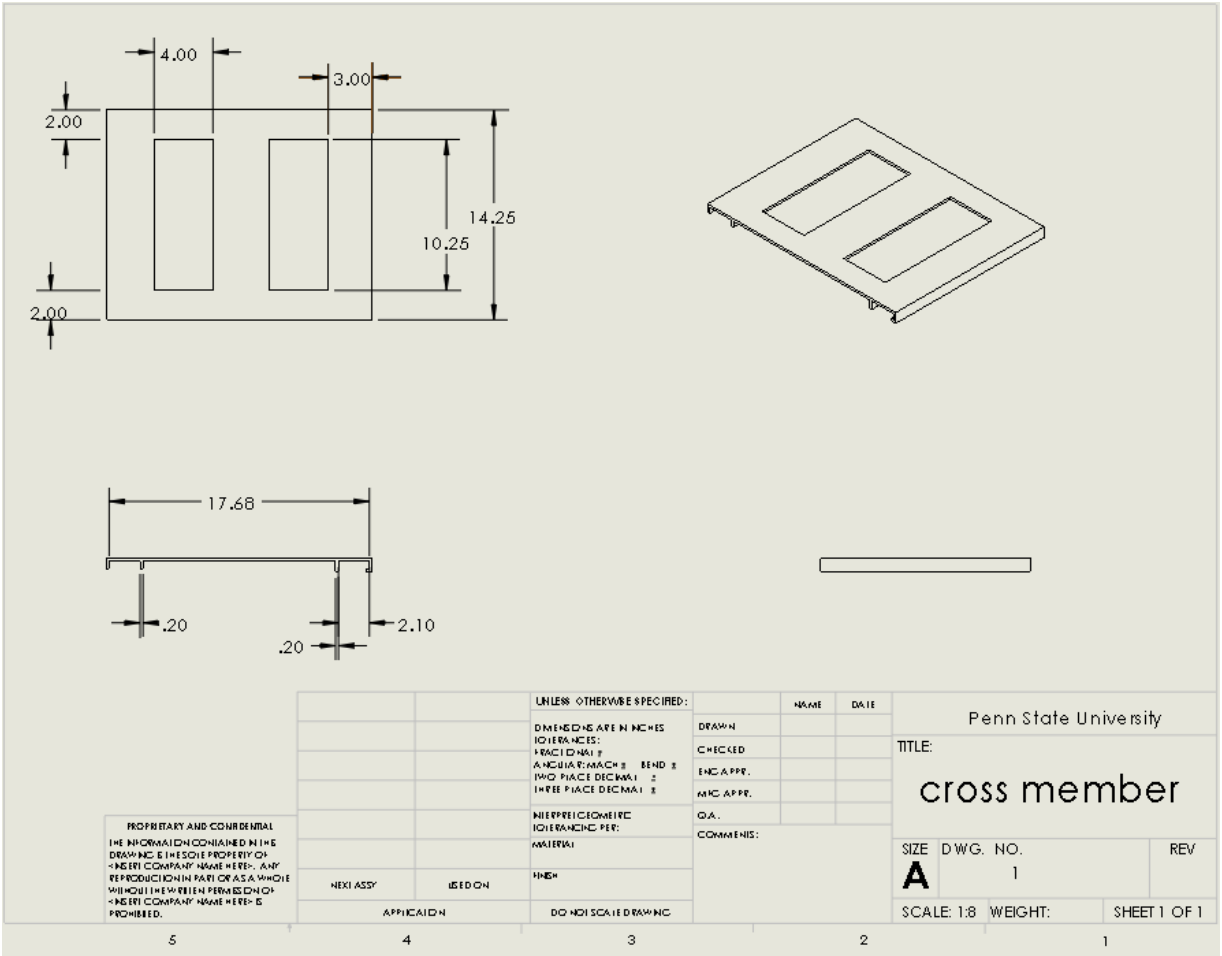

Fig. 3-Cross Member Drawing

(Dylan Johnson & William Clark)

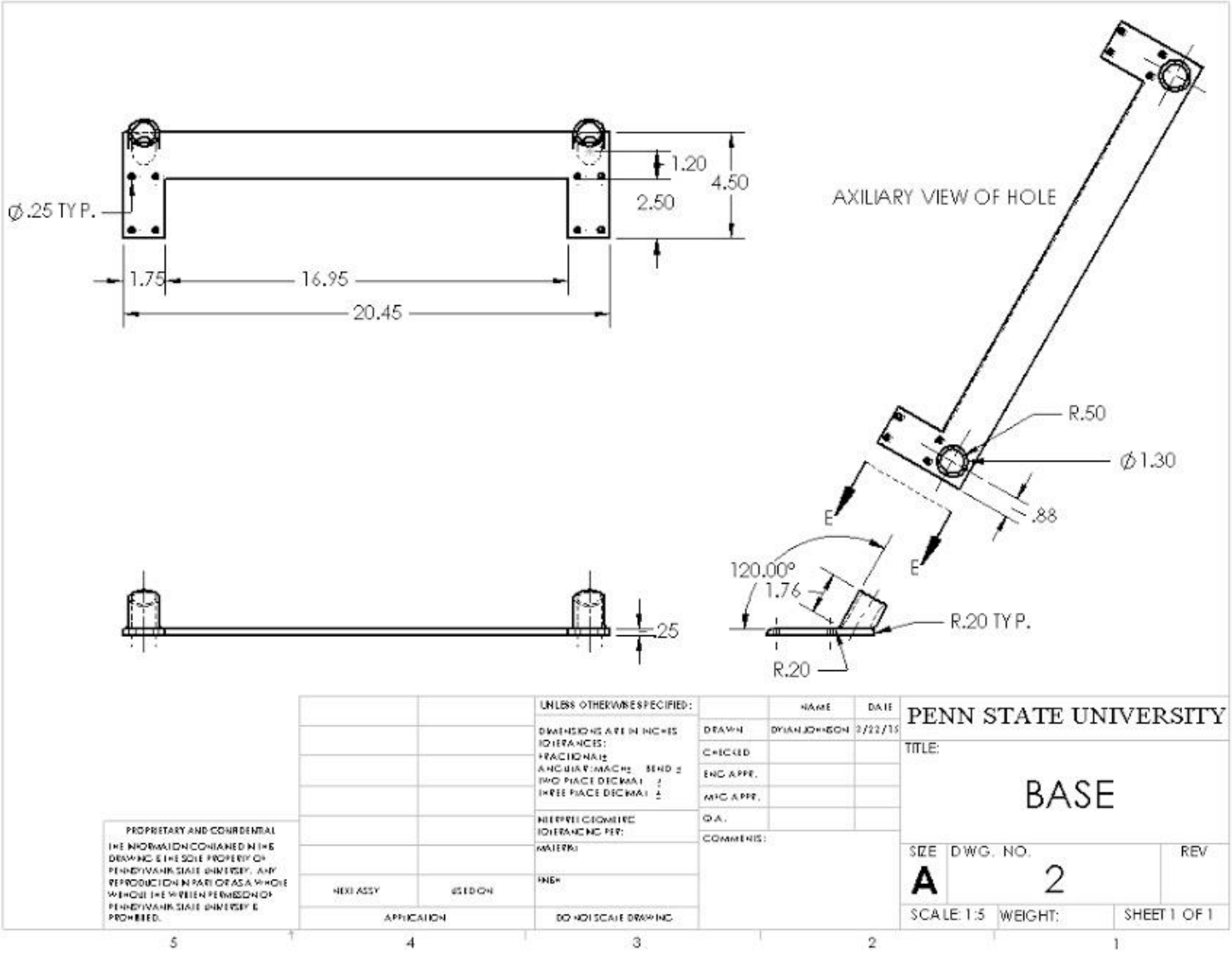

Fig 4 - Base drawing

(Dylan Johnson)

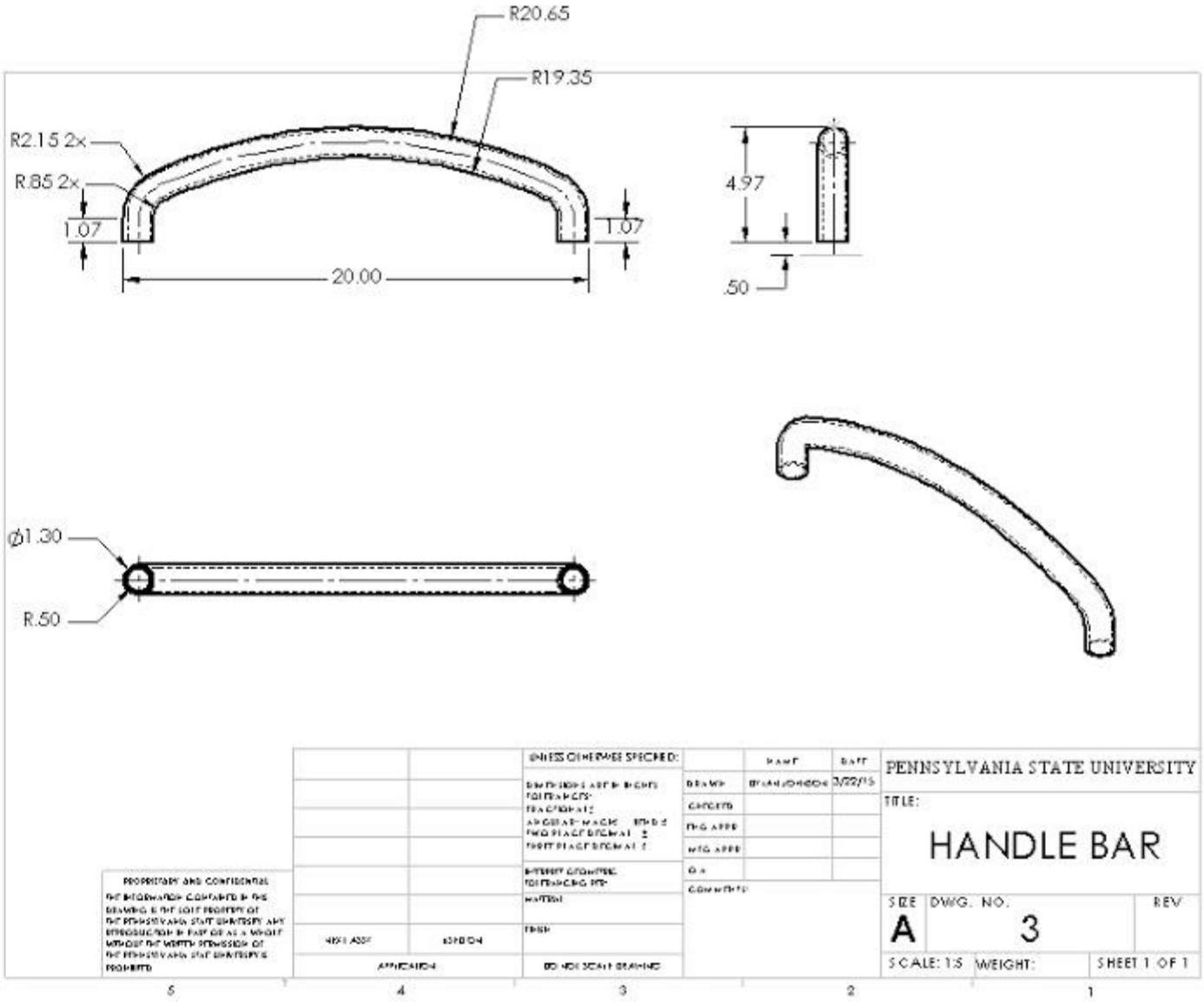

Fig 5 - Handle Bar drawing

(Dylan Johnson)

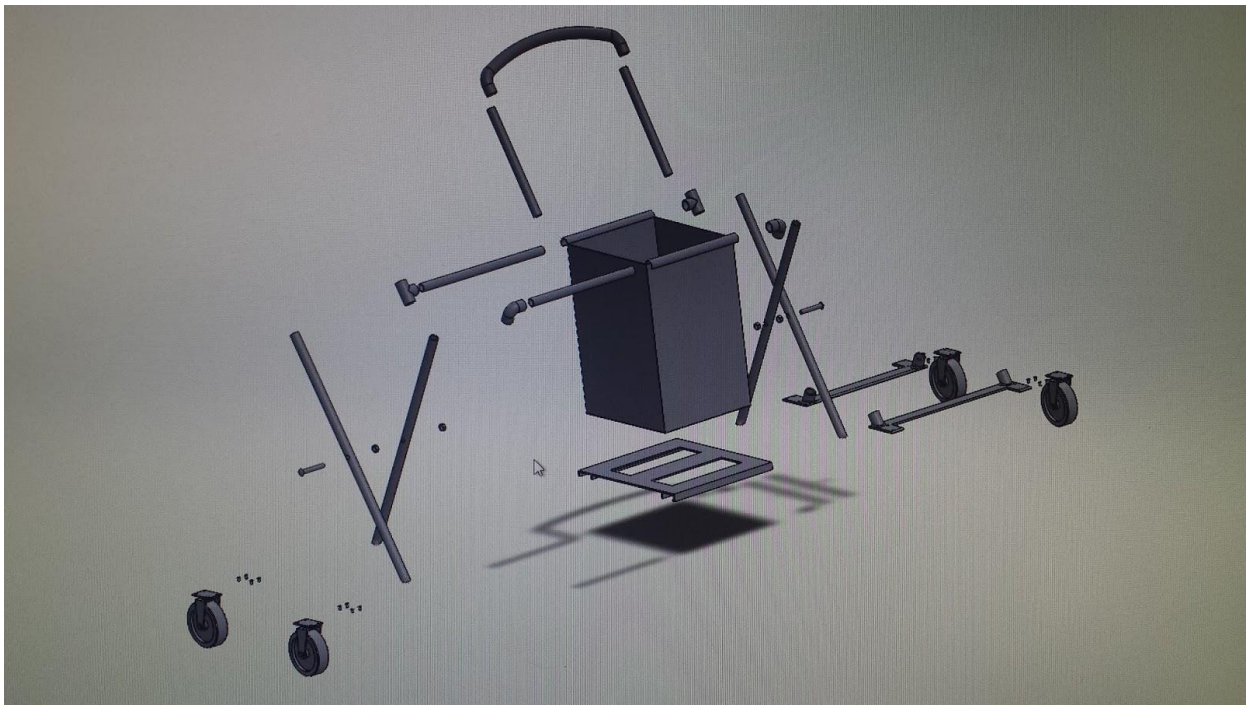

FIG. 6. Image of Exploded View of Cart

(Dylan Johnson & Sachin Aji Bhaskar)

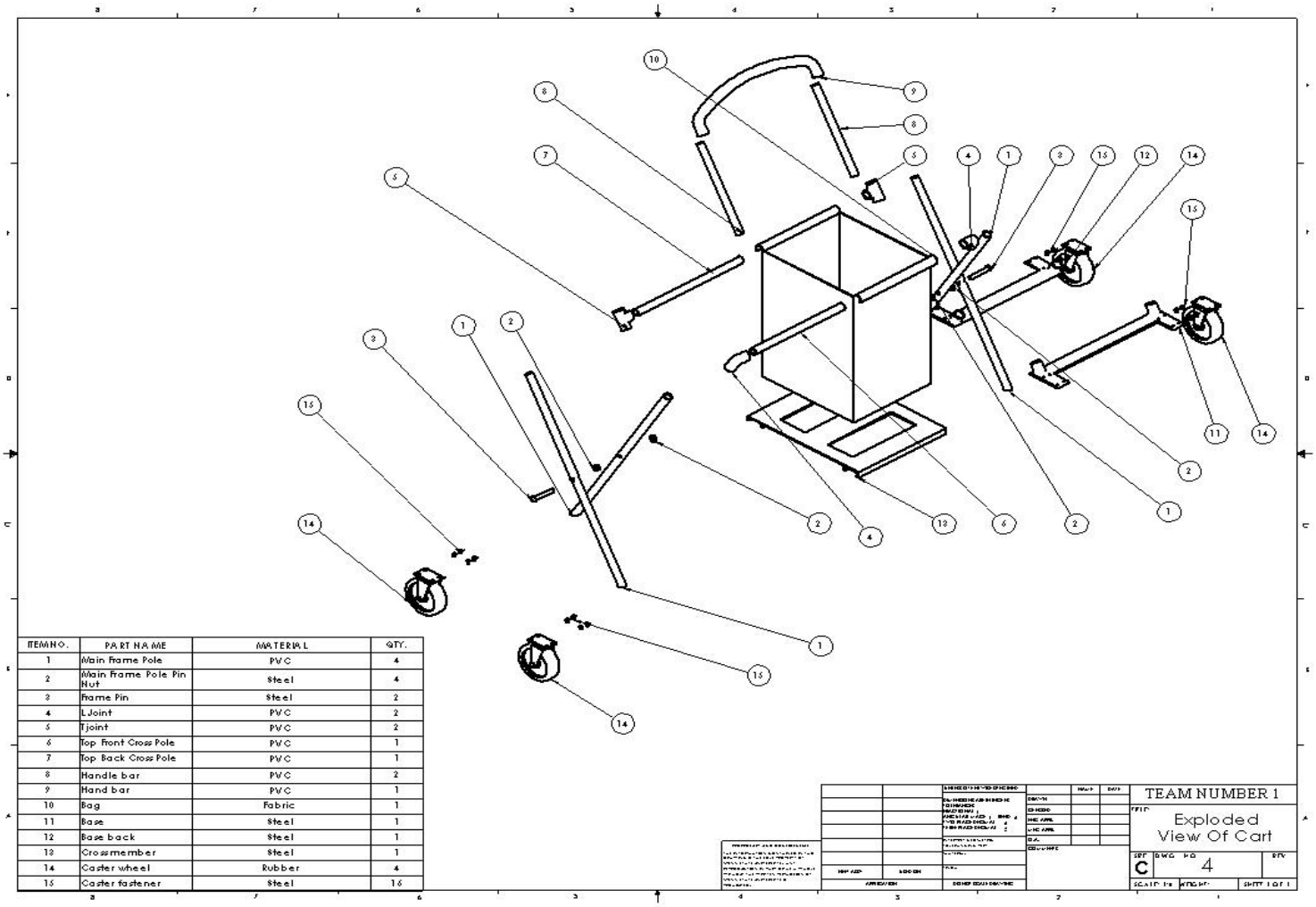

ITEM NO.	PART NAME	MATERIAL	QTY.
1	Main Frame Pole	PVC	4
2	Main Frame Pole Pin Nut	Steel	4
3	Frame Pin	Steel	2
4	L Joint	PVC	2
5	T joint	PVC	2
6	Top Front Cross Pole	PVC	1
7	Top Back Cross Pole	PVC	1
8	Handle bar	PVC	2
9	Hand bar	PVC	1
10	Bag	Fabric	1
11	Base	Steel	1
12	Base back	Steel	1
13	Crossmember	Steel	1
14	Caster wheel	Rubber	4
15	Caster fastener	Steel	16

FIG. 7. Drawing of Exploded View

(Dylan Johnson & Sachin Aji Bhaskar)

FIG. 8. Folded Image of Prototype Cart

Design Features

Our cart has the following features:

- Lightweight
- Easily foldable
- Holds up to 100 pounds
- Has bottom plate for extra support and/or holding a case of water or soda
- Durable swivel wheels
- Removable bag to clean or replace if broken

(Team)

Operation Instructions

In order to fold and unfold our shopping cart, The plate underneath the bag must either clip to keep the cart unfolded, or unclip in order to fold the cart together. When the plate is clipped in, the cart is unable to fold. The plate must be clipped in while the cart is in use to prevent an unwanted folding of the shopping cart. The bag is attached by velcro so in order to remove it, simply rip apart the velcro and vice versa to put back on.

(William Clark)

Engineering Analysis

Working Mechanism

The cart we have designed folds by crossing poles on both sides of the cart. When the plate is removed from the bottom, the poles in the shape of an "X" are free to rotate inwards, hence folding the cart. Because a bag is used instead of metal or other hard material like a normal shopping cart, it has the ability to fold along with the outside frame. When in use, the plate must be locked in to hold the frame folded outwards. The whole folding mechanism revolves around the plate on the bottom as well as the frame being able to move freely when the plate is not attached.

(William Clark)

Cost Analysis

Item	Cost	Quantity	Total
Caster Wheels	$3.01	4	$12.04
PVC Pipe	$3.65	1 x 10 ft	$3.65
L - joint	$0.59	2	$1.18
T - joint	$0.86	2	$1.72
Handle Bar	$2.00	1	$2.00
Hinge Bolts	$0.67	2	$1.34
Washers	$0.10	2	$0.20
Stop Nut	$0.29	2	$0.58
Steel Base	$18.12	1	$18.12
Bag	$5.65	1	$5.65
Caster Bolts	$0.22	16	$3.52
Total			$50.00

Table 4 - Cost Analysis

Conclusion

Our goal was to make a simple portable shopping cart for anyone. Through our research and advices from others, we came up with X-Frame Cart as our final design which satisfied every specifications, and satisfied most of customer needs as well. The X-Frame Cart is simple, lightweight, easily foldable, and cost effective. It could be easily handled by elders and it is light enough for them to carry it around as well.

(YoungSoo Park)

Acknowledgments

A special thanks goes out to Xinli Wu, P.E., for giving us the opportunity to partake in this project. He guided us through the steps and helped us out when needed. The success of the group and this project is solely due to him. We would also like to thank our friends for providing us with information on what our design should revolve around due to their needs.

(Team)

References

http://www.mcmaster.com

http://www.lowes.com/

http://www.engr.psu.edu/xinli/edsgn100/