EDSGN 100

Introduction to Engineering Design

ArcelorMittal's Waste Stream Reuse and Recycling Project

Drum Washer

Section 10 Team 1

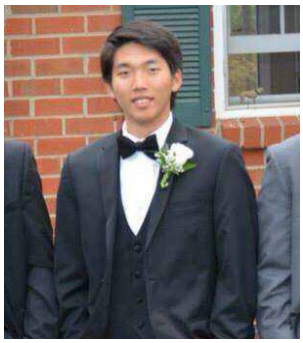

Submitted by: William Clark, Dylan Johnson, YoungSoo Park, Han Yang

Submitted to: Xinli Wu

Submission Date: 5/4/2015

URL: http://www.personal.psu.edu/hpy5013/edsgn100_spring15_section10_team1_dp2.pdf

Abstract

The goal from the start was to design a system that will save ArcelorMittal money and reduce their carbon footprint. Creating something that is affordable and eco-friendly is not an easy task. The creation must reduce the amount of pollution and must benefit the industry as well. Long hours of research and designing went into this and in the end, the perfect product for ArcelorMittal was created.

Table of Contents

Introduction……...……....Pg. 4(William Clark)

Description of Design Task…….…Pg. 4
Problem Statement……...Pg. 4(Team)
Mission Statement……Pg. 4(Team)
Design Specifications……...Pg. 4(Team)

Design Approach……..……..……....Pg. 5-7
Project Management……...Pg. 5(Team)
Concept Generation……..……Pg. 5-6(William Clark & YoungSoo Park)
Rationale for Opportunity……..…….Pg. 6(William Clark)
Design Matrix……...…….Pg. 6(Team)
Description of Selected Design……...…….Pg. 7(William Clark)

Prototype…….…Pg. 7-11
CAD Drawings……..…….Pg.7-9(Dylan Johnson)
Prototype Scale…….……..Pg.10(Team)
Design Features……...……..Pg.11(Team)

Analysis……...…..Pg. 11-12
Waste Diverted……..Pg. 11(William Clark)
Concept of Operations…….……Pg. 11(YoungSoo Park)
Life cycle Assessment……..……...Pg. 11-12(Han Yang)
Economic Viability……..Pg. 12(Han Yang)

Conclusion……...……Pg. 12(YoungSoo Park)

Acknowledgments……...……Pg. 13(Team)

References……..……...Pg. 13

Introduction

(William Clark)

Sustainability is the ability to create and reuse a system or process that reduces the constant need for more resources. It is a process that is self sufficient and can survive on its own. This project was to design and create a system that will lower the pollution rate and help the environment. The idea was to create something that will make ArcelorMittal more self sufficient by reusing materials they already have instead of throwing them away and hurting the environment.

Description of the Design Task

1) Problem Statement

ArcelorMittal produces a lot of waste that has potential to be reused. This waste hurts the environment and costs the company money. Instead of this, a process must be made that can recycle the unwanted materials so they can be reused, thus producing less pollution and maybe even saving some money as well.

2) Mission Statement

The mission was to create a design or process that allows certain materials to be recycled instead of being thrown away. The process will lower the amount of pollution generated, reducing ArcelorMittal's carbon footprint. It may even save the company some money as well.

3) Design Specifications

-Sustainable
-Affordable
-Eco-friendly
-Time efficient

Design Approach

1) Gantt Chart

	March, 30	April, 6	April, 13	April, 15	April, 20	April, 22	April, 27	April,29
Information gathering and Brain storming								
Concept selection and Design creation								
System design and concept of operations								
Life cycle analysis								
Assesment of important aspect of Design system								
Prototype design and testing								
Design project documentation and presentation								

Table 1. Gantt Chart

2) Concept Generation

(William Clark)

Throughout the brainstorming process, many different ideas came to mind. Some of these ideas were not the best but others had some potential. Towards the end, the concepts were narrowed down to five different ideas.

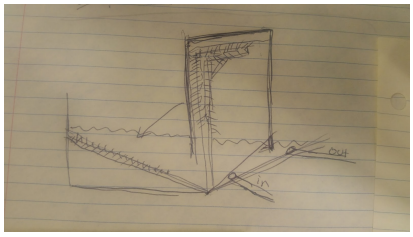

i) This idea was to dump each drum into water to clean it out. It is an efficient cleaning tool but a little complicated.

Fig. 1. Arm Cleaner

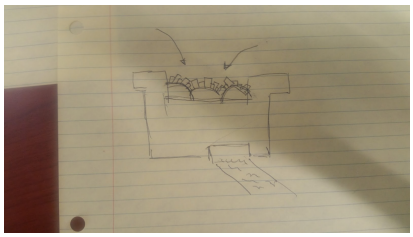

ii) This idea was to grind up wood pallets to make them woodchips. This is a simple idea but can be unsafe to workers.

Fig. 2. Wood Grinder

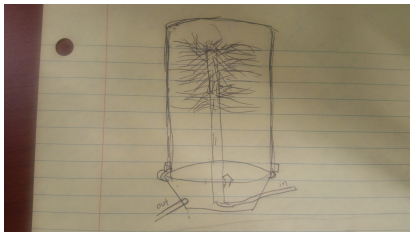

iii) This idea was to put a drum upside down on top of a bristle that also shoots out a soap and water mixture. This is a safe and easy to use design.

Fig. 3. Drum Washer

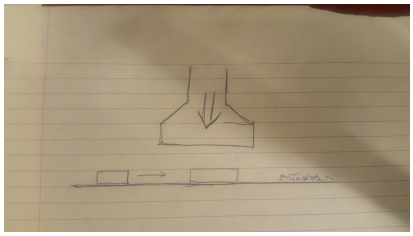

iv) This idea was to put refractory bricks onto a conveyor belt and each brick will be crushed by a weight stomping down on it. This can be costly and is not safe for workers.

Fig. 4. Brick Crusher

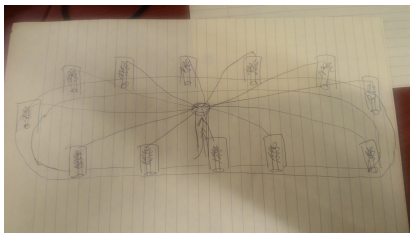

v) This idea is similar to idea iii. Instead of one bristle, there is a belt of them. This idea can be very costly and seems a little unnecessary as well.

Fig. 5. Wash Cycle

3) Rationale For The Opportunity

(William Clark)

There are many reasons why these ideas can all work. The majority of them are very cheap to implicate. It would not take much money to start the process and it would take no time at all to save money and reduce the size of ArcelorMittal's carbon footprint. Some of the designs are also relatively simple. Each process would not take that much extra work. They are safe and easy to operate for the workers and are pretty time efficient as well. Manual labor would be kept at a very minimal for each idea.

4) Design Matrix

Arcelor Mittal: Waste Stream Reuse and Recycling Design Matrix	Control: (Landfill everything)	Design 1: Wood chipper and magnetic nail removal (pallets).	Design 2: Crusher for refractory bricks (reuse raw materials)	Design 3: Wash and shred steel barrels for steelmaking
Sustainability	0	0	+	+
Affordability/Cost	0	-	-	+
Environmentally Friendly	0	0	0	+
Safety	0	-	-	0
Ease of Use	0	0	+	0
Labor required	0	-	+	0
Total	0	-3	+1	+3
Rank		III	II	I

Table 2. Design Matrix

5) Description of Selected Design

(William Clark)

The idea that was best fitted for his problem has been determined to be Design 3. It has the most benefits with the least amount of weaknesses. The way this design works is fairly simple. A steel drum is placed upside down on top of a tube. The tube then starts spinning while spraying out a soap and water mixture at a high pressure. The mixture drips down into a bowl-type mechanism and drains through a tube into the sewer system. Anti-freeze is the chemical that is being rinsed out so any excess of that is safe to go into the sewer. Once the steel drum is cleaned and dried, it is available for ArcelorMittal to reuse in their steelmaking process. It is a simple design concept that has many benefits to it.

Prototype

1) CAD Drawings

(Dylan Johnson)

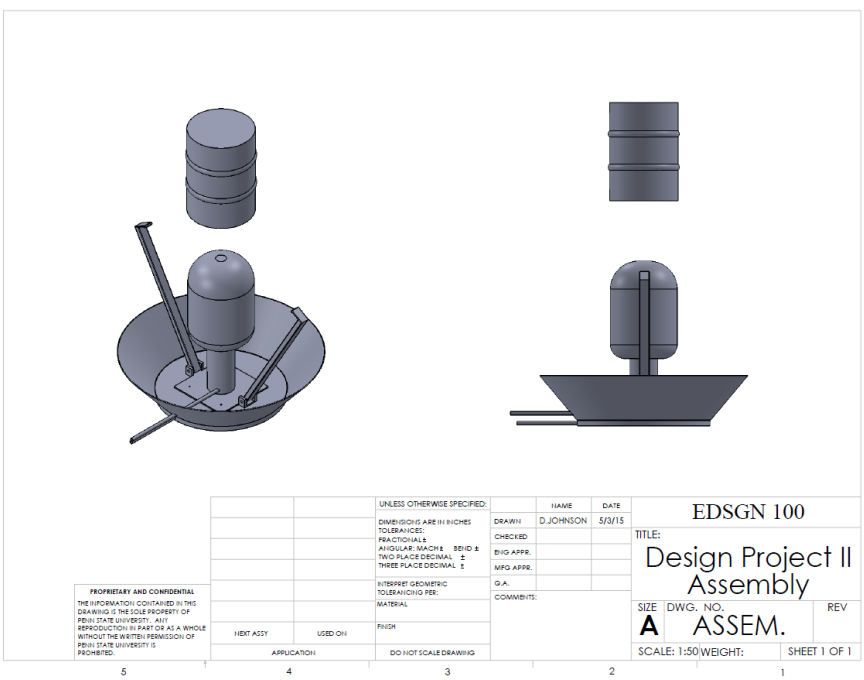

Fig. 6. Assembly Drawing

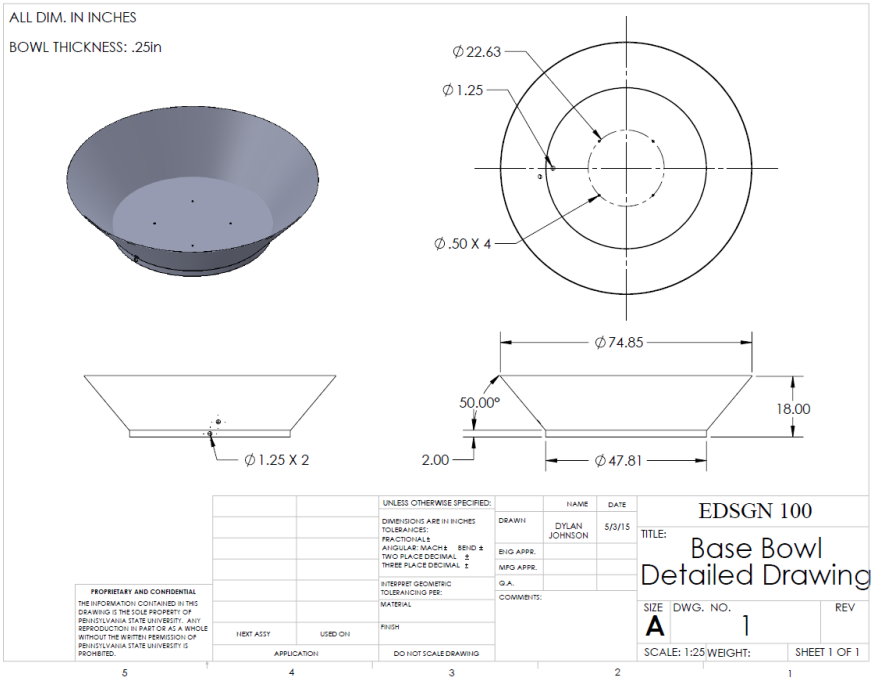

Fig. 7. Base Drawing

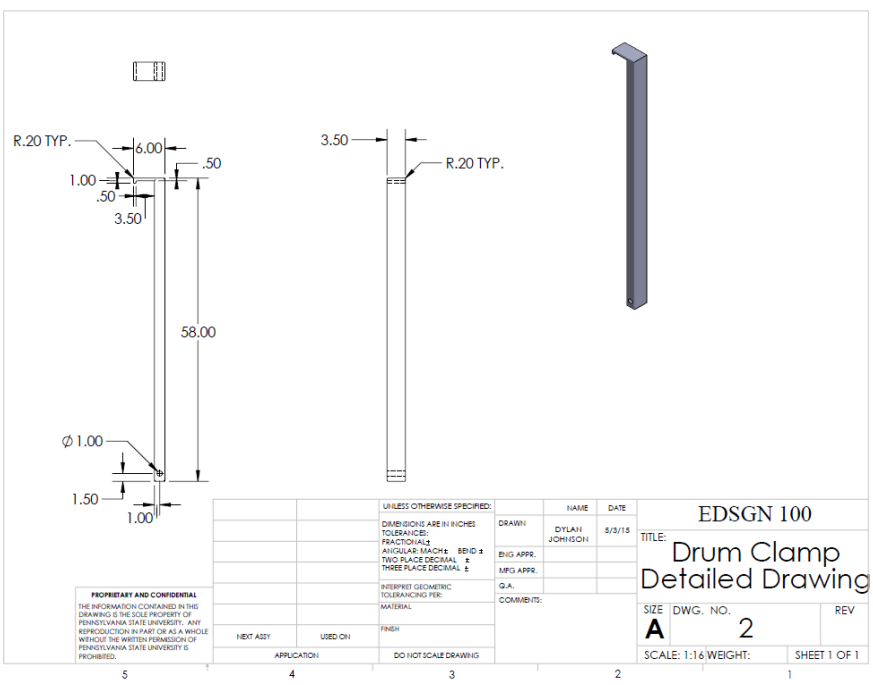

Fig. 8. Clamp Drawing

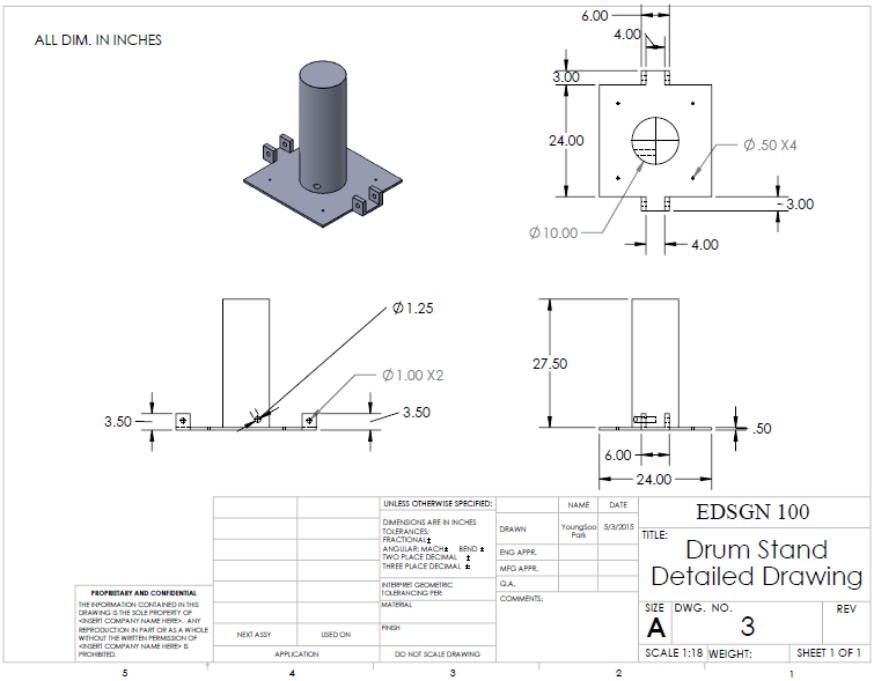

Fig. 9. Drum Stand Drawing

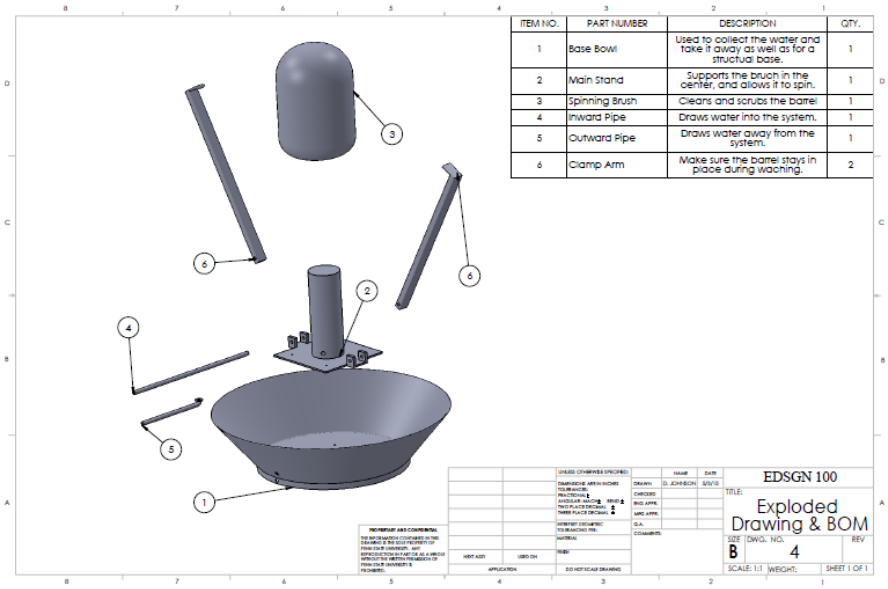

ITEM NO.	PART NUMBER	DESCRIPTION	QTY.
1	Base Bowl	Used to collect the water and take it away as well as for a structual base.	1
2	Main Stand	Supports the bruch in the center, and allows it to spin.	1
3	Spinning Brush	Cleans and scrubs the barrel	1
4	Inward Pipe	Draws water into the system.	1
5	Outward Pipe	Draws water away from the system.	1
6	Clamp Arm	Make sure the barrel stays in place during washing.	2

Fig.10. Exploded View

2) Prototype Scale

The scale used for our prototype was approximately 1:19. This made it simple to make the prototype light and easy to travel with.

Fig. 11. Prototype Front

Fig. 12. Prototype Angle

3) Design features

This concept has many features that will be beneficial to the users. It is inexpensive, easy to use, and reliable for every use. The bristol spins to make sure that every part of the drum will get cleaned. The drain at the bottom ensures that there will be no mess after each wash.

Analysis

1) Waste Diverted

(William Clark)

There is a considerate about of waste that will no longer just be thrown into a landfill. Every steel drum that goes through ArcelorMittal will be cleaned and can be reused in their process. No matter how many steel drums they go through, they all can be recycled. Other drums can also be cleaned and sold if the chemical in them is not a biohazard. There are many companies in the area that will pay to pick up these drums and have them recycled themselves. If all this is taken advantage of, there will be practically no drums of any material making the trip to the landfill anymore. ArcelorMittal will have every drum that goes through the factory recycled

2) Concept of Operations

(YoungSoo Park)

The steel drum will be locked upside down on a cylindrical brush which spins and sprays out soap and water mixture at the same time from a inputting tube, cleaning the drum with its bristle. The excess water and chemical trips down into a bucket and runs through a tube that is connected to the drain. Since the chemical in the steel drum is ethylene glycol, also known as antifreeze, is safe to be emitted into the environment through the drain. After the drum is washed and dried, they will then be shredded to ease the process for ArcelorMittal and allow them for reuse.

3) Life Cycle Assessment

(Han Yang)

The life cycle assessment is often used to analyze and understand the stages of production from the very beginning to the end, where the impact on environment is most critical. For Arcelormittal, a company with 119 million of steel production, the amount of energy and raw materials used during the production process is a huge number. Also, the CO_2 emission has been widely blamed because of the severity of global warming.

To minimize the negative effect, effective solutions were developed. With the application of this new design, the steel drums could be recycled and used as raw materials. As a result, the impact from waste is reduced while the new resource of raw materials is found, which in turn would also reduce the impact on environment that comes from the mining process.

4) Economic Viability

(Han Yang)

Economic viability is the ability to sustain operation on the basis of current and projected revenues. For this design, the materials made out of are relatively cheap, and manual labor is minimized; during its operation, a small amount of energy could save the company money which they used to spend on landfilling and mining, which means the revenue saved by it excesses its cost. Since little manual labor needed, this design could span generations without the difficulty for workers to understand the working mechanism as well.

Conclusion

(YoungSoo Park)

The goal was to design and create a process that allows waste materials from Arcelormittal to be recycled instead of polluting the environment by thrown into a landfill. Through research and the design matrix, the process of designing a machine that could clean steel drums and also recycling them has been decided to be most effective which satisfied every specifications. The drum washer is very simple, easily affordable, time efficient, and environmentally friendly.

Acknowledgments

A big thank you goes out to Xinli Wu for teaching this class and giving us an opportunity to test our mines and create a design that can help out in the real world. We would also like to thank any friends that had any contributions or ideas to this project. Thank you ArcelorMittal for giving us the chance to design a process for you.

References

http://www.engr.psu.edu/xinli/edsgn100/

http://www.sedtapp.psu.edu/design/design_projects/edsgn100/sp15/index.html

http://usa.arcelormittal.com/