Design Project #2

Alcoa Sustainability Project

Introduction to
Engineering Design
EDGSN 100
Section 025

Team 8
Seth Temple- sjt5247@psu.edu
Daniel Leavy dpl5098@psu.edu
Akshat Bharti aib5490@psu.edu
Ali Muhsen awm5793@psu.edu

Submitted to:
Professor Smith
Date:
12/16/2013

Executive Summary

Design Team #8 was given the task by Alcoa of designing a product or process that utilizes the intrinsic properties of aluminum to increase sustainability in the Penn State community. We had to choose a system that could be improved upon in Penn State, and we chose the recycling system. We created a flow chart of the system, and found that the problem was getting people to take the first step and recycle. Using a survey, we decided that the recycling bin needed to be changed in order to optimize the recycling rate. Through external research, surveys and analysis of the customer needs, we were able to come generate multiple concepts, which we screened and scored, ultimately generating a final prototype. Using our bill of materials, we benchmarked our final design against other commonly used recycling bins to ensure that our design was successful.

Alcoa Sustainability Project

Table of Contents

1.0 Introduction……..3
1.1 Mission Statement……3
1.2 Definition of Sustainability……3
1.3 Initial Problem Statement……4
1.4 Target Population Research……4
2.0 Customer Needs Assessment……4
2.1 Selection of a System……4
2.2 Survey……..……5
2.3 Initial Customer Needs Statements..…….……7
2.4 Customer Needs Hierarchy……..……8
2.5 Needs Metric Matrix……8
2.6 Revised Problem Statement……8
3.0 External Search……..……9
3.1 Literature Review……..……..9
3.2 Patent Search……..11
3.3 Design Target…….……12
4.0 Internal Search…….……12
4.1 Concept Generation…….……12
4.2 Concept Selection……..21
4.2.1 Adjusted Needs Statements….……..21
4.2.2 Concept Screening…….……21
4.2.3 Weighted Needs Survey……..22
4.2.4 Concept Scoring……..23
4.3 Prototyping……23
5.0 Final Design……..……..25
5.1 Design Drawings and Parts List……..25
5.1.1 Design Drawings…….……25
5.1.2 Parts List……28
5.2 Bill of Materials…….……29
5.3 How Does It Work?.....29
5.4 Benchmarking……30
6.0 Conclusions……30
References……..31

1.0 Introduction

Our design team was given the task by Alcoa of using the intrinsic properties of aluminum to redesign a product or a process at Penn State. Our first process was to come up with a definition of sustainability and use this definition along with our needs statement to create our initial problem statement. Afterwards, we did some target population research and also some research on the intrinsic properties of Aluminum. Our group then decided to choose to improve the recycling system at Penn State and we used a flow chart to determine that we were going redesign the recycling bins. After this we created some general needs statements. In order to clarify why people didn't recycle we sent out a survey and used the results from the survey to generate multiple concepts. As we progressed through the design process and chose to redesign a recycling bin, we had to go back and adjust our needs statements to better fit our concept. Then we used a Pugh chart to narrow down our concepts. Then we weighted each individual needs statement by an additional survey and then used those weights to score our concepts, which we used to pick our final design. Our final design had many features that made our design more efficient but at the same time kept it affordable. The following report is organized into 7 main sections. First, we analyzed our customer needs by creating our definition of sustainability along with our initial problem statement, and then researched our target population. In the next section, we chose to redesign the recycling system at Penn State and made a chart of all of the components, and using this system, we made a list of our general need statements using a survey. In the following section, we did our external research on aluminum and found that aluminum had many desirable qualities. In our Concept Generation and Selection section, we used brainstorming to generate concepts that fit our needs statements, and then we adjusted our original needs statements. Afterward, we screened, scored and refined our concepts to come up with a final prototype. Our Final Design Section shows a detailed model of our design, as well as the components and a description of their function. In our Conclusion section, we analyze the success of our prototype.

1.1 Mission Statement

Our team was given the task of identifying a campus opportunity that would benefit from the introduction of aluminum or the increased use of aluminum products. This task was assigned to us by Alcoa. We were required to come up with a definition of sustainability and apply this definition to a product or process that we are redesigning. We were encouraged to look throughout our campus for products or systems that could be improved by the incorporation of aluminum.

1.2 Definition of Sustainability

We defined sustainability to be a method that allows a process or a product to last longer and increase durability, while also benefiting the environment and communities in relation to long term needs. For our definition, we intended to focus on recycling and/or reducing waste.

1.3 Initial Problem Statement

We were assigned the task of using the intrinsic properties of aluminum to improve a product or process in order to increase sustainability within the Penn State community. We came up with our Initial Problem Statement by applying our Mission Statement to our Definition of Sustainability.

1.4 Target Population Research

Our target population was the Penn State community and Alcoa. We found that the Penn State University has a 17:1 student to faculty ratio, meaning that the majority of the customers that our project applies to are students. Also, we found that Penn State faculty and students work together on research in order to promote environmentally friendly process and sustainability. This shows that our project will be able to have a large impact since there is already a lot of interest in sustainability at Penn State. Penn State also spends huge quantities of money on research every year, and some of this research is focused on the environment and sustainability. In addition, our other customer, Alcoa, is also very involved in sustainability. Alcoa is the leading producer of aluminum in the world, and their primary location is in Pittsburgh, Pennsylvania in the United States. They focus a lot of attention on environmental sustainability and safety.

2.0 Customer Needs Assessment

After we had developed our initial problem statement, we had to narrow down our options by choosing a specific system. We decided to look at the available systems, and we chose the recycling because we, as students, are directly involved in the recycling system. We then made a flow chart to show all of the steps of the recycling process, and realized that the biggest problem was not the recycling system but getting people to take the first step and recycle. We then made a survey that would help show what the customer thought needed to be changed to help us develop our needs statements. Based on our system, our initial problem statement, and our survey, we created a list of general need statements.

2.1 Selection of a System

Using our initial problem statement, we chose a system that we thought we could have a large impact upon by changing specific aspects of the system. We initially thought of the food system, the recycling system, and the transportation system. We also considered changing the architectural system, by adding an alternative window design that incorporates aluminum. We ultimately chose the recycling system, because we knew that aluminum could be incorporated and have a large effect on the system. Also, as students, we knew that we could have an effect on the system since we are the first part of the process of recycling. We then took our system and made a flow chart that shows all of the steps that are in the process of recycling. The process (Figure 1) starts with a consumer using a recyclable product. After they have used the product, they face the decision of whether to recycle the product or to throw the product in the

trash can. If the product is recycled, it can be reused. If the product is thrown away, it is permanently lost from the system and cannot be reused. We realized that problem with the system was not the process of recycling the aluminum, but the problem was getting people to recycle the product.

Figure 1- Flow Chart of Penn State Recycling System

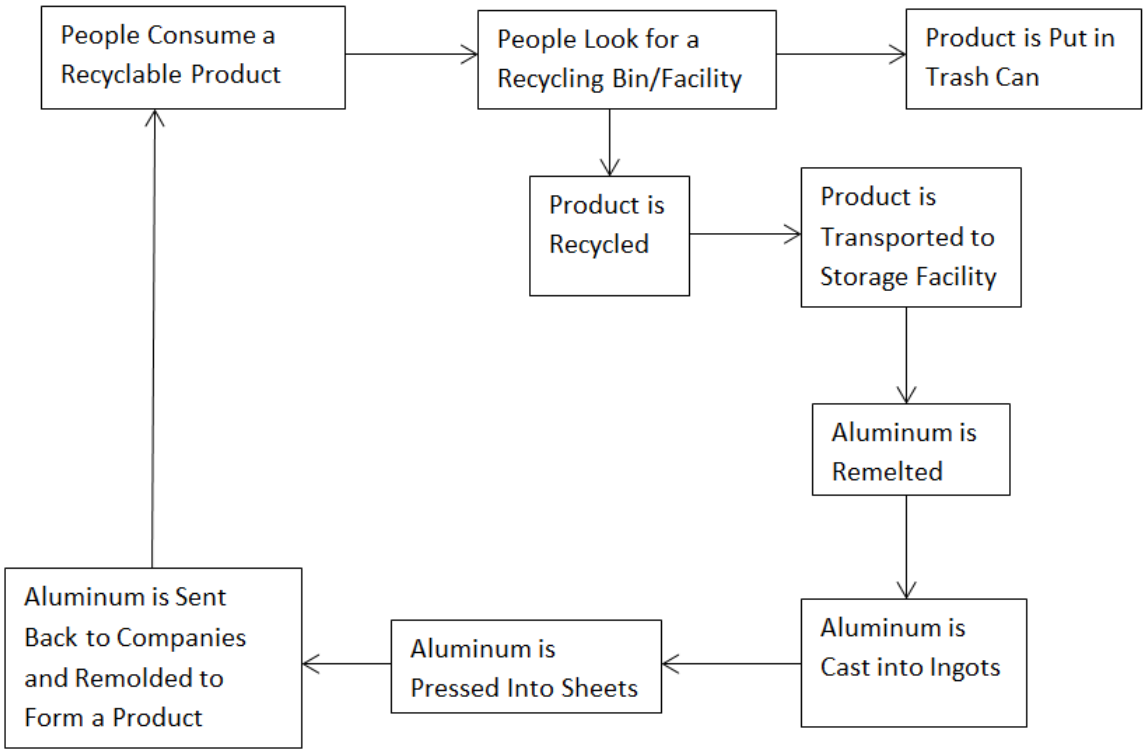

2.2 Survey

Using our system, we came up with some general survey questions so that we could find out our customer needs. We used SurveyMonkey as the site for our survey. The population that was surveyed was other students in the Penn State Class of 2017, and it was a mixture of males and females around the age of 18 or 19. The survey asked what the main reason was for people not recycling. The survey also asked of the people that do recycle what was the main reason that they recycle. We found from the survey (Figure 2) that the reason people don't take the time to recycle is because it is inconvenient, there aren't enough recycling bins around, and there is no immediate personal benefit from recycling. The survey results (Table 1) show that the highest amount of responders said that the reason was that recycling is inconvenient. From the second half of the survey (Table 2), we found that people do recycle because they feel a sense of obligation.

Figure 2- Recycling Survey Part 1

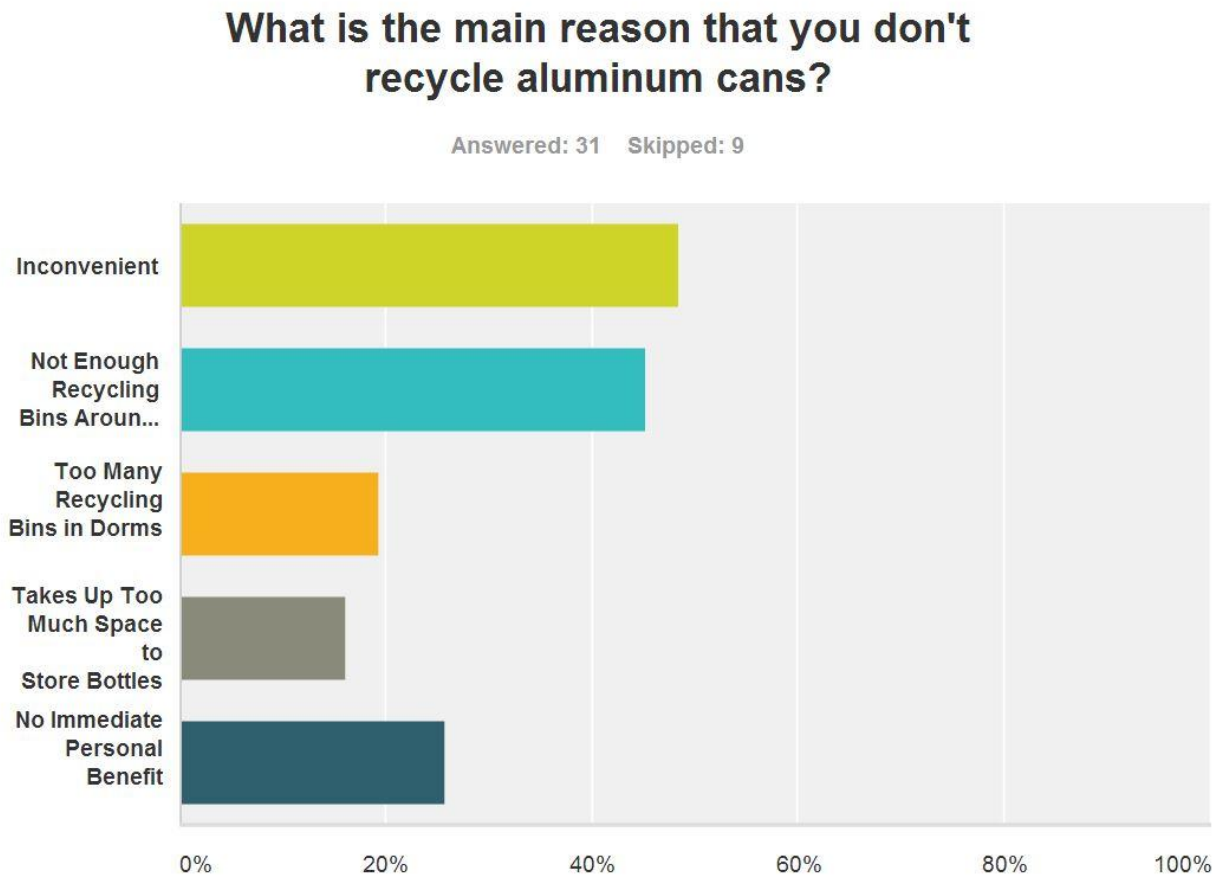

Table 1- Recycling Survey Results Part 1

	Reason People Don't Recycle
48%	Inconvenient
45%	Not Enough Recycling Bins
19%	Too Many Recycling Bins in Dorms
16%	Too Much Storage Space
26%	No Immediate Personal Benefit

Table 2- Recycling Survey Part 2

	Reasons People Do Recycle
3.60%	Guilty Conscience
57.10%	Sense of Obligation
14.30%	Inconvenience
25%	Why They Don't- No Incentive

2.3 Initial Customer Needs Statements

Based on our survey, we came up with a list of customer needs that correctly identified the specifications that needed to be fulfilled in our design. All of the needs statements were derived from the categories that were used in our survey, in order to cover all of the areas pertaining to our customer. In Table 3, the customer needs statements are listed. Some of the more important Need Statements are Need Statement #1 since it is directly correlated to our mission statement, and Need Statement #8, since it comes from the highest ranked category from our survey.

Table 3- Initial Customer Needs Statements

#	Need
1	The product or process uses the intrinsic properties of aluminum.
2	The product or process improves recycling around campus.
3	The product or process encourages recycling.
4	The product or process increases the rate of recycling.
5	The product lasts a long time.
6	The product or process helps to save resources.
7	The product or process raises awareness of recycling.
8	The product or process increases convenience of recycling
9	The product or process creates an incentive for recycling.
10	The product or process improves the system of recycling around campus.
11	The product or process benefits the environment.
12	The product or process benefits the community.

Table 4 – Customer Needs Hierarchy Part

	Customer Needs	Importance	
1	The product or process uses the intrinsic properties of aluminum.	5	5 - Most Important
2	The product or process improves recycling around campus.	5	1 - Least Important
3	The product or process increases the rate of recycling.	3	
4	The product lasts a long time.	3	
5	The product or process helps to save resources.	3	
6	The product or process raises awareness of recycling.	2	
7	The product or process increases convenience of recycling	4	
8	The product or process creates an incentive for recycling.	3	
9	The product or process improves the system of recycling around campus.	4	
10	The product or process benefits the environment.	3	
11	The product or process benefits the community.	4	

2.4 Customer Needs Hierarchy

After our team put together a list of customer needs, we decided we needed to organize our needs into a hierarchy. The process of organizing the needs into a hierarchy is important because it shows us what is most important to the customer. This allows us to best design a product that puts the customer's input directly into the design. Furthermore, it allowed us to differentiate between the important aspects and the less important aspects so that we could focus on what the customer wanted. In our hierarchy (Table 4), we rank the importance of each individual needs statement. The needs statements that were ranked the highest were that the product would use the intrinsic properties of aluminum, which is very important since that is the essence of our project, and that our product improves recycling around campus.

2.5 Needs Metrics Matrix

Since we had our customer needs, we had to find a way that they could be measured. We did this by setting up a Needs Metrics Matrix, which has the needs statements matched up with ways that each individual needs statement can be measured. In Table 5, we show how each needs statement can be measured quantitatively.

Table 5- Needs Metric Matrix

	Needs Statements	Quanitity Recycled (kg)	Recycling Rate of PSU Community(%)	Waste from Recycling Process (%)	Longevity of Product (years)	Resources Saved (kg)	Quantity of Recycling Bins (#)	Cost ($)	Energy Consumption (J)
1	The product or process uses the intrinsic properties of aluminum.	x	x						
2	The product or process improves recycling around campus.	x	x						
3	The product or process increases the rate of recycling.	x	x						
4	The product lasts a long time.				x				
5	The product or process helps to save resources.	x		x		x			x
6	The product or process raises awareness of recycling.		x						
7	The product or process increases convenience of recycling		x				x		
8	The product or process creates an incentive for recycling.							x	
9	The product or process improves the system of recycling around campus.		x				x		
10	The product or process benefits the environment.	x							
11	The product or process benefits the community.		x						

2.6 Revised Problem Statement

We want to use intrinsic properties of aluminum to increase sustainability and efficiency in the Penn State Community by improving the recycling system, specifically trying to make recycling more convenient for the students and the community.

3.0 External Search

After creating our needs statements and redefining our problem statement, we needed to find out more about aluminum so that we could build a project more specifically tailored to the recycling of aluminum. We specifically looked into the recycling process of aluminum and the intrinsic properties of aluminum.

3.1 Literature Review

As a group, we researched the properties of aluminum, so that we could understand the advantages and disadvantages that aluminum has. First of all, aluminum is the element on the periodic table with atomic number 13, meaning that it has 13 protons, and in its neutral state, has 13 electrons. The atomic mass of aluminum is 26.98 atomic mass units, allowing us to conclude that the element must have 14 neutrons in its most stable isotope. Because of aluminum's location on the periodic table and its properties, aluminum is considered a post transition metal, meaning that it has the properties of metals, but aluminum lacks some of the properties that most transition metals have. A very important property of aluminum is the fact that it can be recycled with 68.8% efficiency.

Aluminum has a variety of properties that make it unique. Aluminum has the appearance of a silvery white metal. The melting point of aluminum is 660.37° C, which is relatively low compared to a lot of the transition metals. Aluminum's boiling point is 2519° C, which is also relatively low compared to some other metals. Aluminum is also a very abundant element, and it is the most abundant metal on the planet, however aluminum cannot be found in its pure state.

In addition, aluminum has many other distinctive properties. Aluminum has a density of 2.7 g/cm^3, which means that aluminum is light compared to other metals. Even though it is a lighter metal, it also is very strong, and can take a lot of weight before breaking. Although aluminum metal in its pure form is not exceedingly strong, many alloys, which consist of a combination of aluminum and another metal, have a very high strength. One of the most common alloys of aluminum, 6061-T6, has tensile yield strength of 414 megapascals. Aluminum is also nontoxic in its solid form, so it can be used extensively in public locations without having a negative effect. Aluminum is nonmagnetic so it wouldn't disrupt the electronic systems. Aluminum is, however, highly conductive of both heat and electricity, and this property makes it useful for a variety of purposes. Another useful property of aluminum is that it does not corrode when in contact with oxygen, so it does not rust and will not be affected as much as other metals by the weather and will not require maintenance to preserve. Aluminum does not corrode because when it comes in contact with oxygen, it reacts but forms a nonporous seal, which actually protects the aluminum from corrosion. In addition, aluminum is very malleable, and it is easy to shape and form the aluminum into most designs, which is advantageous since it allows it to be used for a variety of products.

Since aluminum cannot be mined in its pure form, it must be put through the Bayer Process to isolate the aluminum and make aluminum oxide. The Bayer Process (Figure 3) consists of a 5 step process to isolate the bauxite ore that was mined to form alumina, which is aluminum oxide. The first step is the grinding of the bauxite, which is just the mineral being crushed to a fine powder and then being treated by sodium hydroxide and calcium oxide. In the second step, which is the digestion of bauxite, the aluminum is dissolved via a double replacement reaction

and forms sodium aluminate and water. The third process is the settling and washing of residues, which is the cleaning of the sodium aluminate by clearing the residue of sodium hydroxide and calcium oxide. The fourth step is the crystallization of hydrates, in which the aluminum hydrate is collected as a precipitate. The last process is the calcination of the hydrate, in which the aluminum hydrate is changed into aluminum oxide and water, leaving the final product, aluminum oxide, ready to be used.

Figure 3- Bayer Process

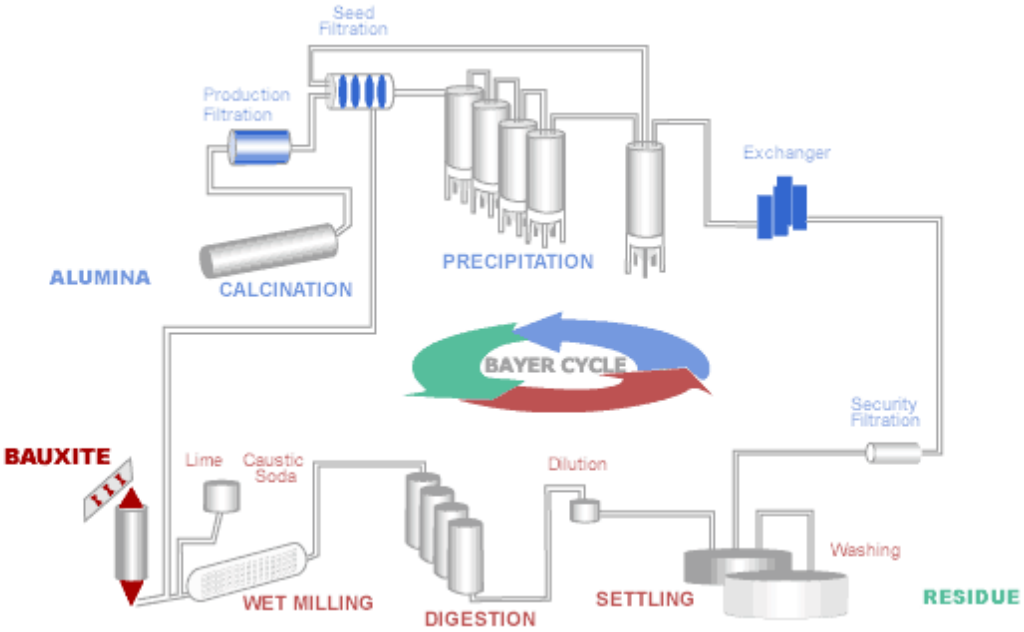

After the Bauxite has been mined and refined, it can be used, and afterwards be recycled. The recycling process (Figure 4) has 4 steps. After the aluminum has been recycled and collected, it first goes into the step of can shredding, in which the aluminum is shredded and then steel is removed. The second step of the process is de-coating the aluminum by taking the paint off by blowing hot air on the shreds of aluminum. Third, the aluminum is melted down and is prepared to be cast into a new shape. Last, the aluminum is cast back into ingots, so that it can be reused after it is sent to companies that need aluminum for their product. Aluminum is a highly recyclable material, and is very valuable because it can be reused indefinitely. After being recycled, aluminum can be back on the shelves in 60 days. By recycling one ton of aluminum, 14000 kWh of electricity, 1,663 gallons of oil, 237.6 million Btu's of energy, and 10 cubic yards of landfill space are saved. By recycling, 95% less energy is used than getting aluminum traditionally through the Bayer Process. Also, aluminum takes from 200 to 500 years to degrade in a landfill which is a very long process, and completely wastes the aluminum so that it can't be used in the future. Aluminum is a very valuable material, partially because it can be recycled so efficiently.

3.2 Patent Search

We then did a patent search to examine the types of technologies that are currently being used in trash cans. Our patent search (Table 6) shows the major parts of recycling bins that are commonly being used. Some common parts of the trash can that have been patented are the cover of the recycling bin, the multi section recycling bin and the crusher that is used in the recycling bin.

Figure 4- Recycling Process

Table 6- Patent Search

	Patent Name	Number	Publication Type	Publication Date
1	Recycling Bin Cover	US 8348092B1	Grant	Jan 8th 2013
2	Recycling Bin	US D671289S1	Grant	Nov 20th 2012
3	Round Multi-Section Recycling bin	US D693532S1	Grant	Nov 12th 2013
4	Recycle bin cover system	US 8376170B1	Grant	Feb 19th 2013
5	Container Crusher	US 8453564B1	Grant	June 4th 2013

3.3 Design Target

Through external research, our team learned that aluminum is extremely valuable, since it can be recycled indefinitely and reused many times. Through the process of recycling, a very large amount of resources can be saved and reused, making the whole system more efficient. Our design is going to be focused on a newer design of the recycling bin that will help increase the rate of recycling in the Penn State community, since the whole process of recycling depends on whether the aluminum is recycled initially or not. We will also add features to the recycling bin to better fit the customer needs.

4.0 Internal Search

For our internal search, we used brainstorming to come up with a variety of ideas that fit our customer needs. Each member thought of several ideas that would improve the appearance and enhance the capabilities of our recycling bin in order to increase sustainability of the product and increase efficiency. After the team came up with ideas, they were screened and scored in order to come up with a final prototype that had the best possible design.

4.1 Concept Generation

In order to generate concepts, our team brainstormed as many topics as we could in 3 minutes and wrote all of them down. With our concepts, we tried to explore a variety of systems that could be used in the recycling process that would help the overall design. Each design had a variety of different features. By using brainstorming in our concept generation stage, our team came up with 8 designs. Each concept was drawn in Solid works so that they can be clearly seen in an easy format.

Concept 1- Recycling Bin with Arrow

Our first concept was aimed at grabbing the attention of the people that pass the recycling bin. The concept (Figure 5) consists of a normal recycling bin with an arrow with a recycling symbol on the arrow that points into the recycling bin, showing that it is a recycling bin. The bin had a cylindrical shape, and was brightly colored so that it would draw the attention.

Figure 5- Concept 1

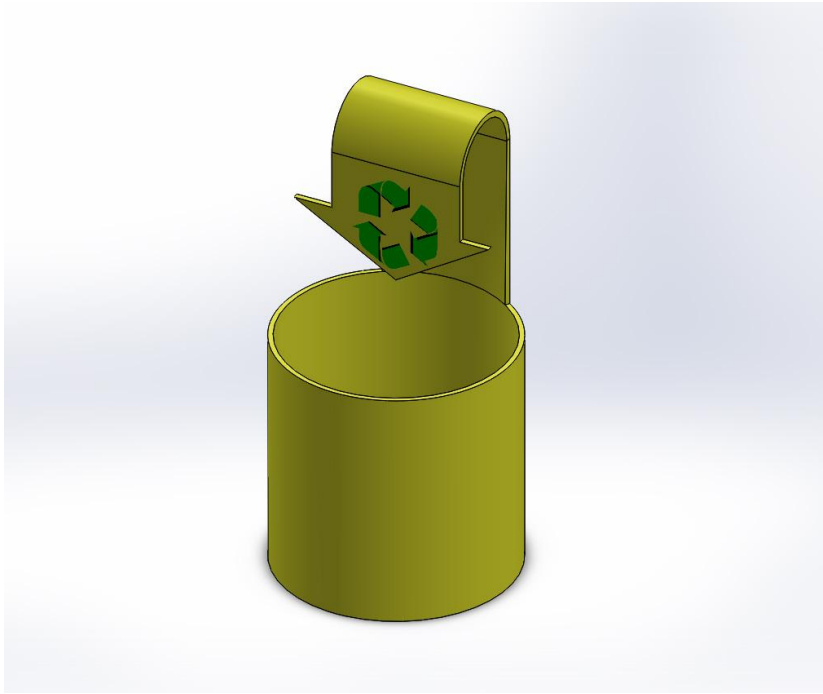

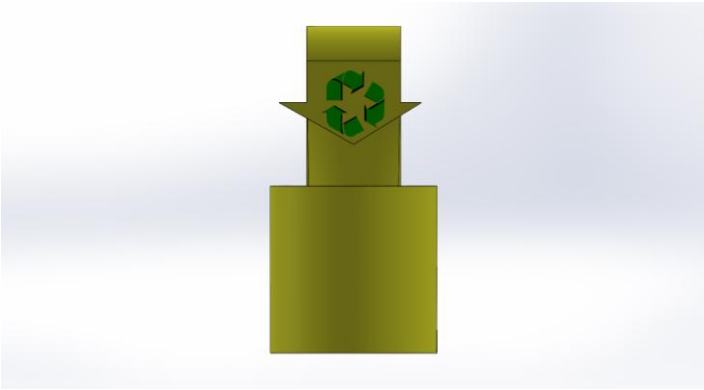

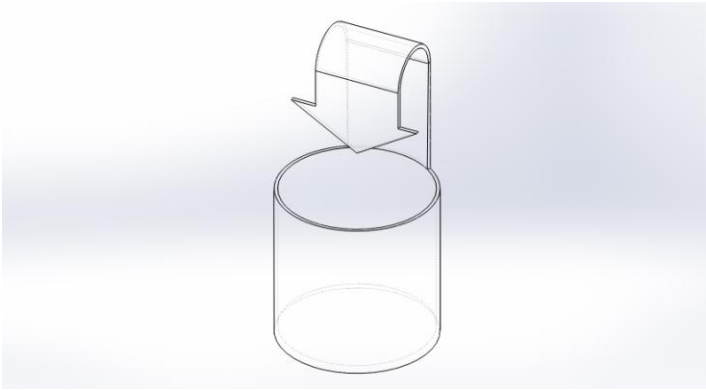

Concept 2- Recycling Bin with Screen

Our second concept is focused on the quantity of aluminum that is saved cumulatively across the campus. The recycling bin (Figure 6) has a screen which displays the amount of aluminum that has been recycled. It also has a scale at the bottom which measures the amount of aluminum recycled. It is similar to the water dispensers used across Penn State's campus that display how much water bottles have been saved. The recycling bin is shaped like a rectangular prism.

Figure 6- Concept 2

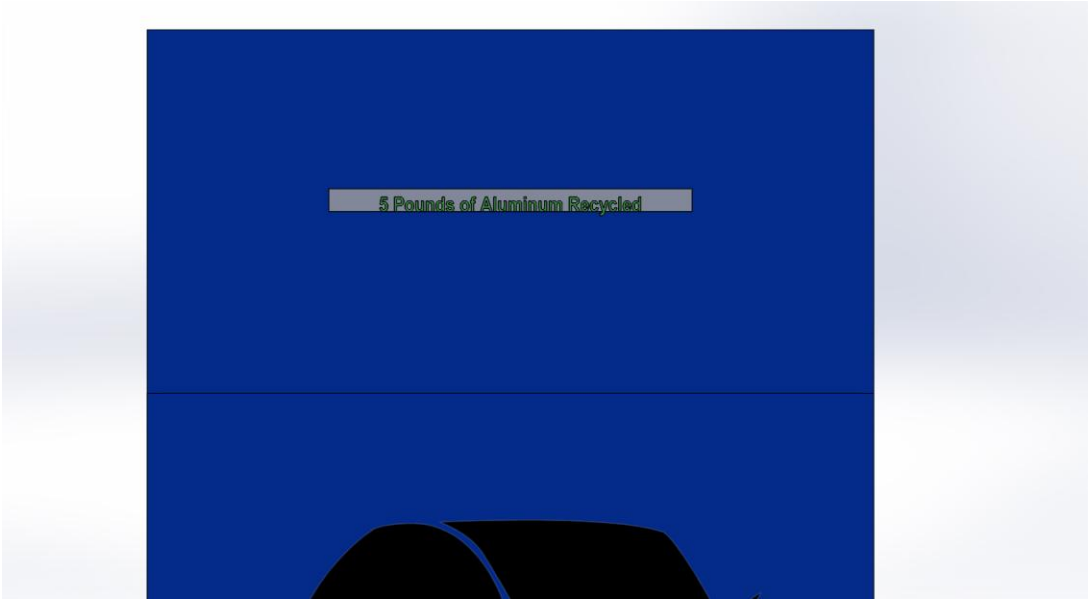

Concept 3- Soda Can Recycling Bin

Our third concept (Figure 7) is focused on grabbing the attention of people and showing directly that this bin is for aluminum cans. This is helpful because often, people do not realize which can is for their recycling. It has a cylindrical shape like a soda can. It also has a very noticeable appearance and would draw people's attention.

Figure 7- Concept 3

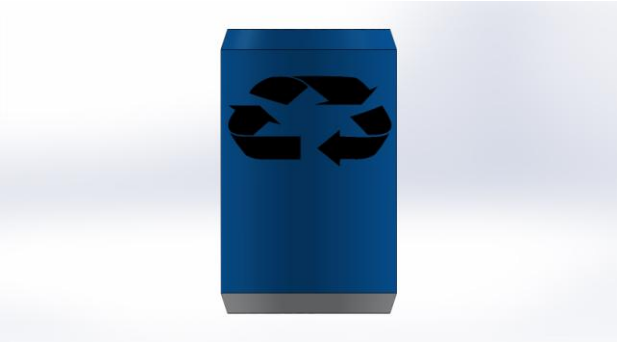

Concept 4- Recycling Bin Shaped Like a Movie Character

Our fourth concept focuses on the current trending movie characters which would grab the attention of the recyclers. Our concept (Figure 8) is a "Minion" which is a character from the movie "Despicable Me", which is a very popular movie. By giving an interesting and attention grabbing shape to our recycling bin, we aim to grab the attention of the people.

Figure 8- Concept 4

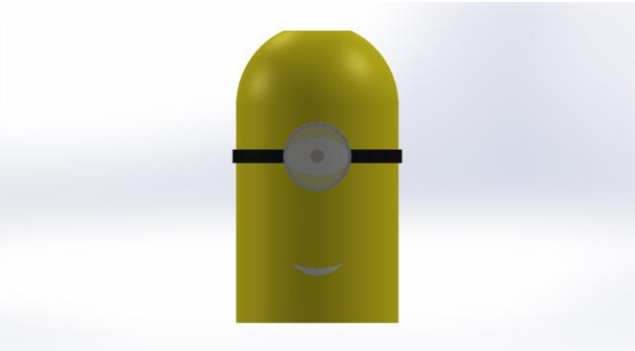

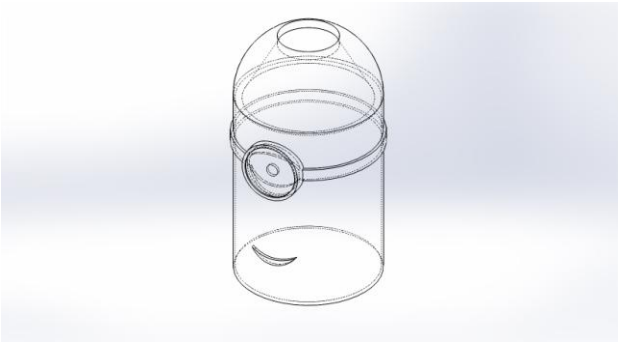

Concept 5- World Cup Recycling Bin

Our fifth concept (Figure 9) aims to grab attention by having a soccer related topic, which is the upcoming 2014 World Cup in Brazil. Since this is a huge event and many people are excited for it, this recycling bin would catch their attention. It is shaped like a globe, to resemble the world and has the symbol for the upcoming World Cup as well as a country's flag.

Figure 9- Concept 5

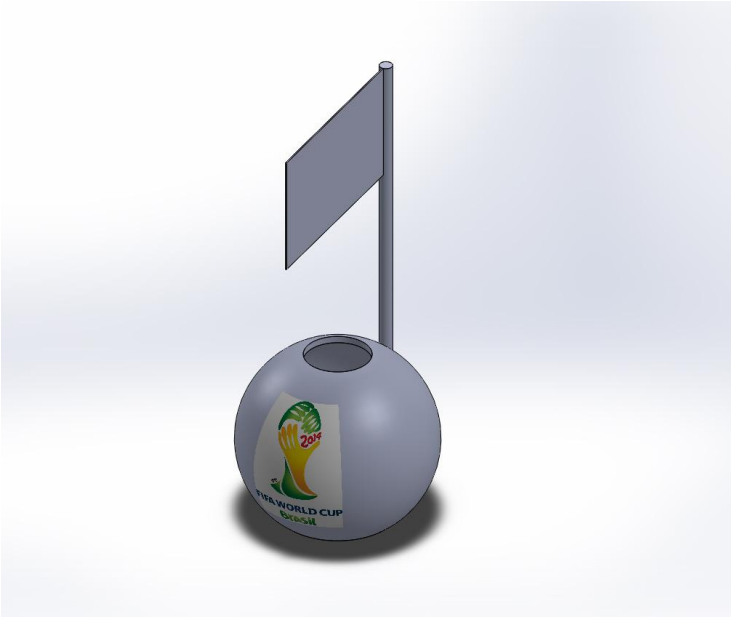

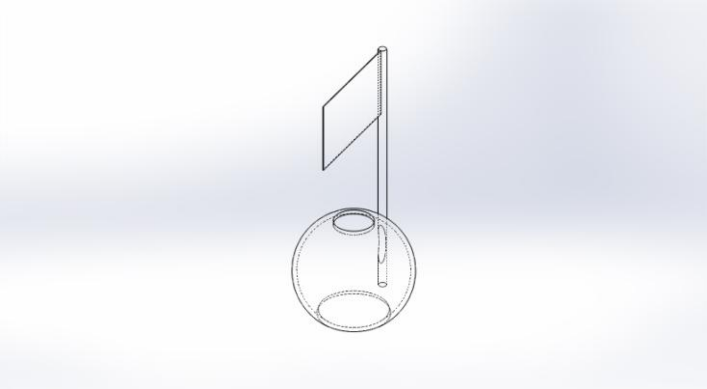

Concept 6- Applause Sound Recycling Bin

Our sixth concept (Figure 10) aims to create an incentive and add fun to recycling by making an applause sound every time a product is inserted into the bin. There is a motion sensor and a speaker positioned inside the bin in order to do these two functions. The recycling bin is a rectangular prism and has a lid, which would protect the motion sensor from the weather.

Figure 10- Concept 6

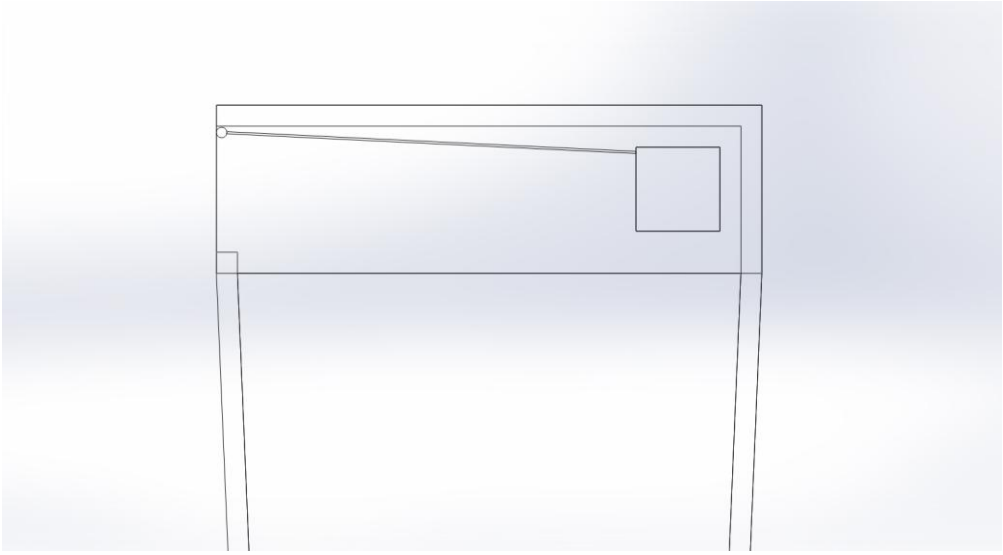

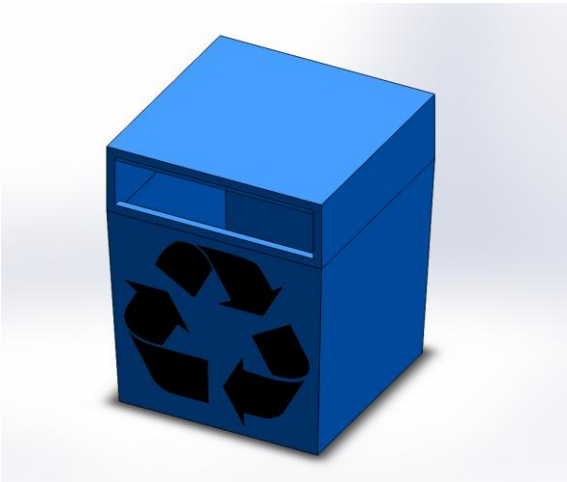

Concept 7- Nittany Lion Recycling Bin

Our seventh concept (Figure 11) has a Nittany Lion on the top which would draw in students that have school spirit. This would encourage school spirit while also encouraging recycling. The recycling bin has a cylindrical shape and has protection on the top. Since Penn State's mascot is a Nittany Lion, we thought it would be a good concept.

Figure 11- Concept 7

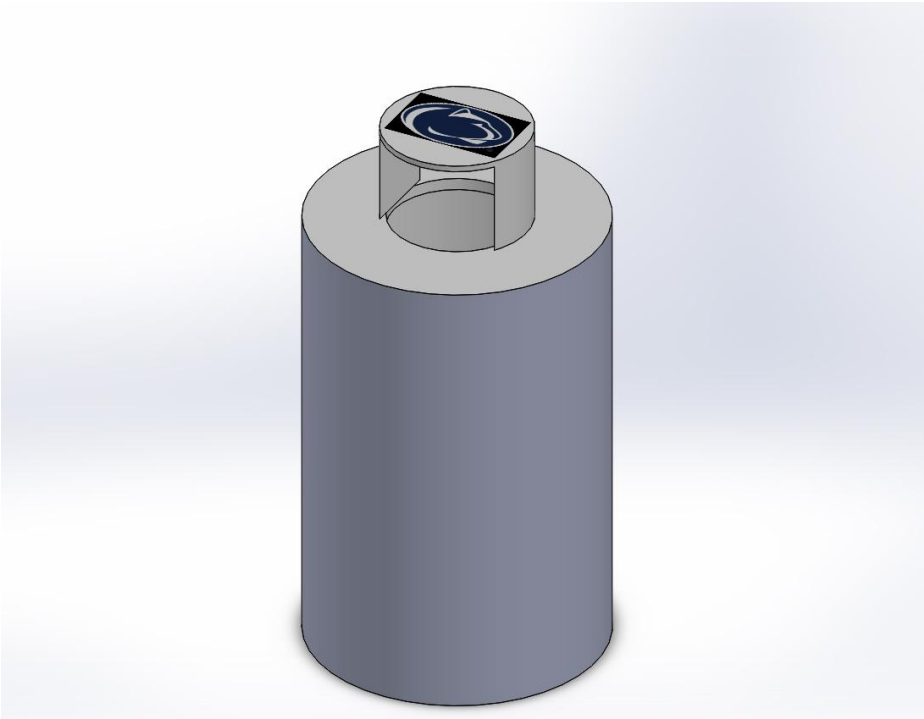

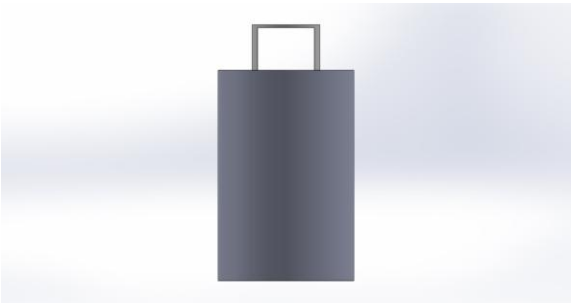

Concept 8

Our eighth concept (Figure 12) is a regularly shaped recycling bin but it glows in the dark. At night, this would encourage people to recycle since it would be more noticeable. This concept would most likely only be used outside. Because of this, we put a lid on the top so that the bin would be protected from the weather.

Figure 12- Concept 8

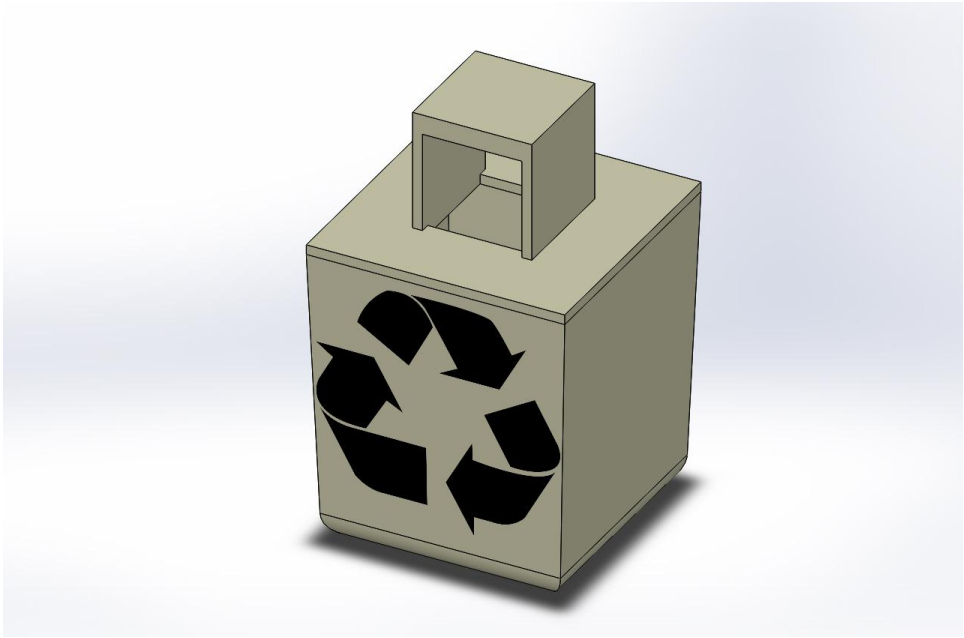

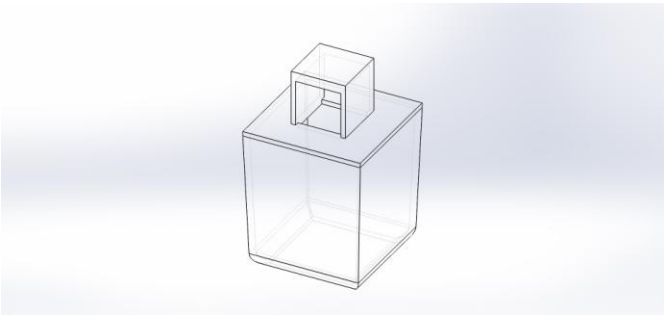

4.2 Concept Selection

Since we now had 8 possible designs, we needed to come with a way to narrow them down and choose a final design. Each concept had to be individually evaluated through the process of screening and scoring. Our concepts were organized into Pugh Charts, so that they could be evaluated against each other. Pugh Charts are very important to the concept selection process, since they display all the concepts good aspects and their bad aspects in an easy format to analyze and allow the concepts to be ranked against each other. Pugh Charts will be used in both screening and scoring to choose the final concept. In screening, the concepts will be graded and then based on the ratings, will either continue on, be combined with another concept, or be discarded. The concepts that continue or have been combined continue on to the process of screening, where they are ranked again but are ranked versus needs statements that were weighted.

4.2.1 Adjusted Needs Statements

In order to rank our concepts in screening and scoring, we realized that we needed to refine our customer needs statements. We analyzed our previous needs statements, and narrowed them down so that the most important areas were being rated. Our new needs statements (Table 7) will be the criteria for ranking in screening and scoring.

Table 7- Adjusted Needs Statements

#	Need
1	To create a recycling bin that raises awareness about recycling
2	To create a recycling bin that creates an incentive to recycle
3	To create a recycling bin that increases the convenience to recycle
4	To create a recycling bin that gets people's attention
5	To create a recycling bin that uses the intrinsic properties of aluminum

4.2.2 Concept Screening

To determine which concept best fit the customer needs statements, all of the concepts that we generated had to be ranked to find out which would continue on to the concept screening stage (Table 8). For our screening stage, the current recycling bin at Penn State that is being used, the Rubbermaid Slim Jim Recycling Bin was used as the benchmark, so all the concepts were ranked against this recycling bin. After our screening, we chose not to combine any concepts and we kept Concept 2, 3, and 6. They were the concepts that best fit the customer needs and deserved to continue on to concept scoring.

Table 8- Concept Screening

Selection Criteria	Concepts								
	Recycling Bin with Arrow	Recycling Bin with Screen	Soda Can Recycling Bin	Shaped like Movie Characters	National Flags	Applause sound	Taditional Recyling Bin	Nittany Lion	Glow in the dark
Raises Awareness	0	t	0	0	0	0	0	0	0
Creates Incentive	0	t	0	0	0	t	0	0	0
Gets People's Attention	t	t	t	t	t	t	0	t	t
Uses Intrinsic Properties of Aluminum	t	t	t	t	t	t	0	t	t
Increases Convenience	t	0	t	t	t	t	0	t	0
Sum +'s	3	4	3	3	3	4	0	3	2
Sum 0's	2	1	2	2	2	1	5	2	3
Sum -'s	0	0	0	0	0	0	0	0	0
Net Score	3	4	3	3	3	4	0	3	2
Rank	2nd	1st	2nd	2nd	2nd	1st	5th	2nd	3rd
Continue	No	Yes	Yes	No	No	Yes	No	No	No

4.2.3 Weighted Needs Survey

In order to weight our needs for concept scoring in terms of importance, we made a survey so that their importance could be decided. Of the five needs statements, the person being surveyed voted for which need statement they thought was the most important for our product. The survey (Figure 13) resulted in the weights for each needs statements.

Figure 13- Weighted Needs Survey

Needs	Votes
Raises Awareness	6
Creates Incentive	12
Gets People's Attention	5
Uses Intrinsic Properties of Aluminum	3
Increases Convenience	8
Total	34

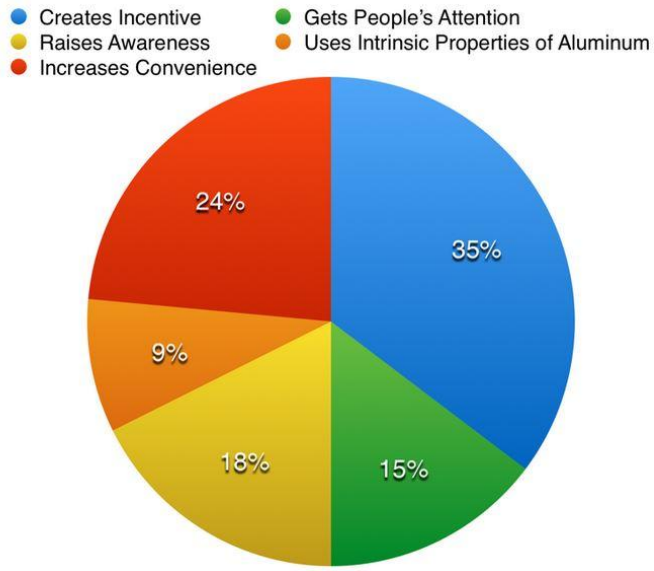

4.2.4 Concept Scoring

After screening the concepts, we were able to narrow down and cut out the concepts that we did not need. We were left with Concept 2, 3, and 6, which we would have to use and expand into our final design. To decide which of these concepts would be used, we used the results from our survey and weighted each of the selection criteria. To get the weights, we divided the number of votes by the number of people to get a percentage, which would be the weighted percentage used in the scoring. Each of the concepts was given a cumulative score based on their individual scores for each needs statements. Ultimately, we decided to combine the three concepts, since we thought that there were very good ideas from each that would make a better product if combined. Using the results from our Concept Scoring (Table 9), we decided to combine the appearance of the aluminum can shape, the screen that shows the amount of aluminum saved, and the applause sound into our final concept.

Table 9- Concept Scoring

Needs Statements	Weight	Concepts					
		Shows amount of aluminum saved		Applause Sound		Aluminum Can Shape	
		Rating	Weighted Score	Rating	Weighted Score	Rating	Weighted Score
Raises Awareness	18%	5	0.9	4	0.72	1	0.18
Creates Incentive	35%	3	1.05	4	1.4	1	0.35
Gets People's Attention	15%	3	0.45	5	0.75	5	0.75
Uses Intrinsic Properties of Aluminum	9%	5	0.45	5	0.45	5	0.45
Increases Convenience	24%	2	0.48	3	0.72	4	0.96
Total Score		3.33		4.04		2.69	
Rank		3		2		4	
Continue?		Combine		Combine		Combine	

4.3 Prototyping

After scoring, we designed a model of our product so that it would be easier to visualize for the group. The design that we prototyped (Figure 14) was the design that came directly out of scoring. The prototype had the appearance of the aluminum can shape, the screen that shows the aluminum used, and the applause sound. After designing the prototype, we realized that it could be improved upon in many ways. We thought about ways that our product could be improved upon, and decided to focus on. An idea that we added is a crusher that will crush the aluminum so that it takes up less volume. Also, we came up with the idea that the scale could be connected to a communication system that would transmit the amount of aluminum to the collector of the recycling, so it would prevent the collector from coming when it is unnecessary. We implemented both of these ideas into our design.

Figure 14- Prototype

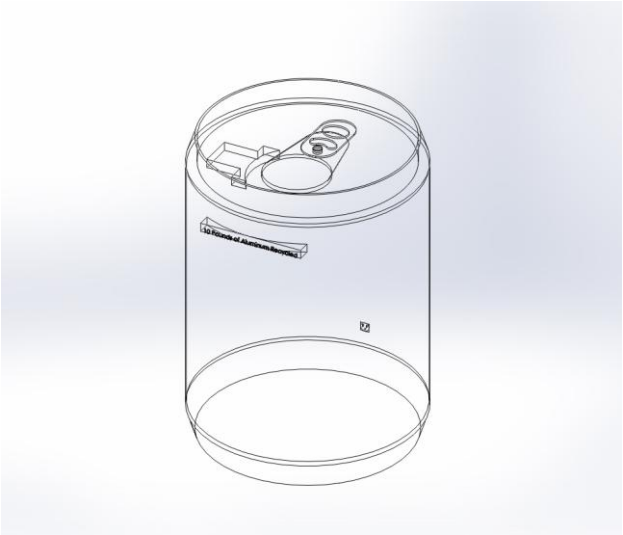

5.0 Final Design

Our final design was a combination of the three concepts that were in scoring which were concepts 2, 3, and 6. Using the design we got from scoring, we made a prototype and made some modifications that we thought would make the product do a better job of fulfilling the customer needs statements. In addition to the combination of the three concepts, we also added a communication system, as well as the crusher for crushing our aluminum. We thought that our product fulfilled all of our customer needs. We checked our customer needs with our adjusted needs statements, and analyzed if the product fit the needs. Our recycling bin fits the need of raising awareness because it has the screen which displays how much aluminum has been recycled cumulatively across campus, which shows students that they can make a difference. To create incentive, our recycling bin had the applause system and by displaying the amount of aluminum recycled, students realize that they are having an effect, and can get a feeling of self gratification. Our recycling bin definitely does a good job of drawing people's attention, since it is pleasing to the eye, and is very noticeable. Our recycling bin also used the intrinsic properties of aluminum since it is used for recycling aluminum, as well as bin is made from aluminum which is durable and won't corrode. The recycling bin will increase convenience since our plan is to put a lot of recycling bins around campus, so it will be easier to find the recycling bins. Our final product did a good job of fulfilling all of the needs statements.

5.1 Design Drawings and Parts List

This section includes our final design and the lists of the major parts. Clear pictures of the product need to be shown so it can be effectively understood. Each part of the product needs to be clearly shown so that the recycling bin can be understood.

5.1.1 Design Drawings

Our final design (Figure 15) consisted of the combined concepts as well as a couple added features during prototyping. It has the appearance of an aluminum soda can, and it has a motion sensor and a speaker that applauds the person throwing their trash away, and it also has a scale and a screen that shows how much aluminum has been recycled cumulatively across campus. During prototyping, we also added a communication system into the recycling bin that lets the recycling collector know how full each recycling bin is, as well as a crusher to reduce the volume of the aluminum in the bin. Both of these modifications would save money since the person collecting the recycling would not have to collect the recycling as often. Our front view (Figure 16) shows the screen on the bin. The internal parts, such as the crusher, the scale and the motion sensor, can be visualized by looking at the transparent view (Figure 17). Also, our drawing shows the dimensions of our recycling bin. The recycling bin has a diameter of 26 inches and is 36 inches tall.

Figure 15- Final Design Isometric

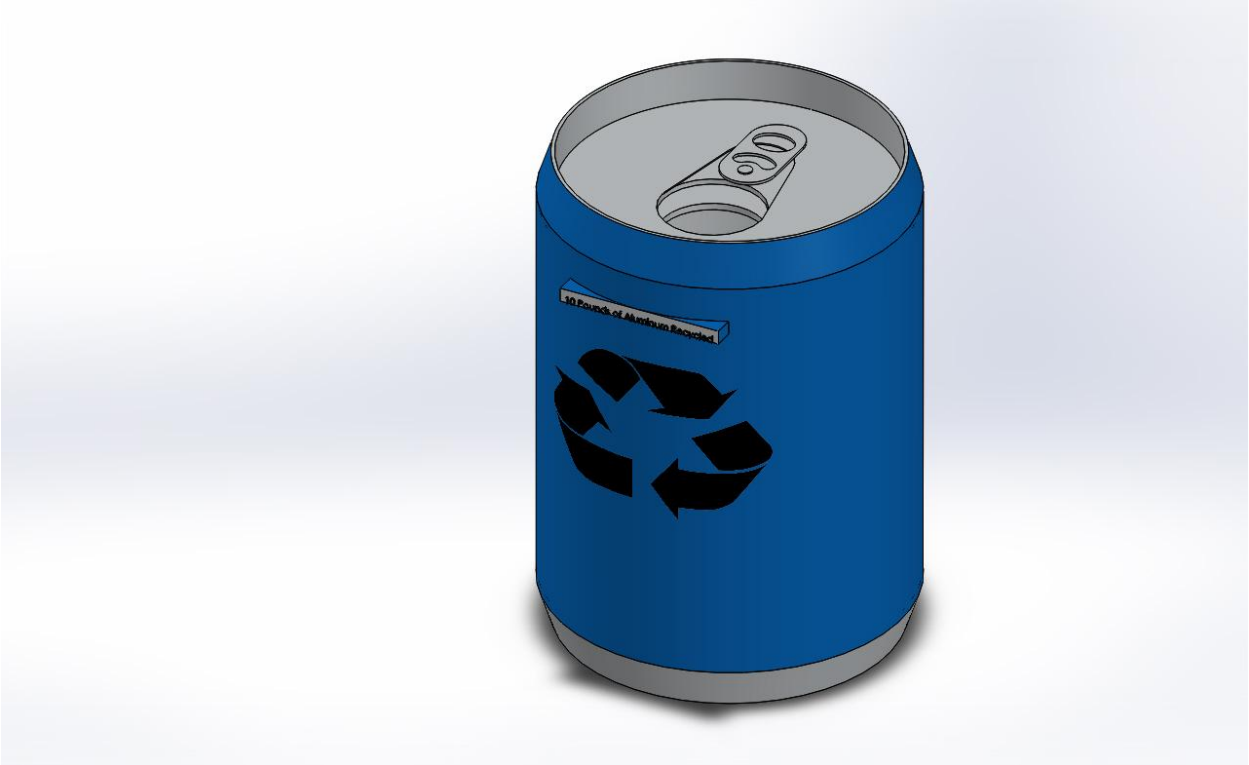

Figure 16- Final Design Front View

Figure 17- Final Design Transparent

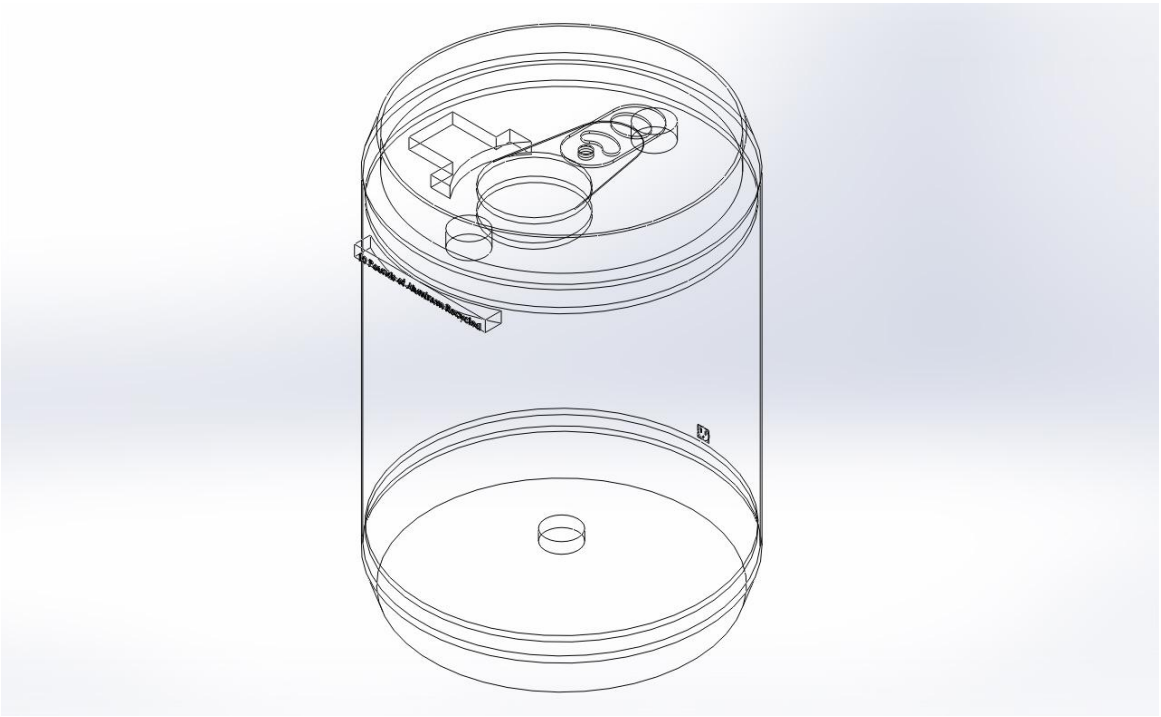

Figure 18- Final Design Drawing

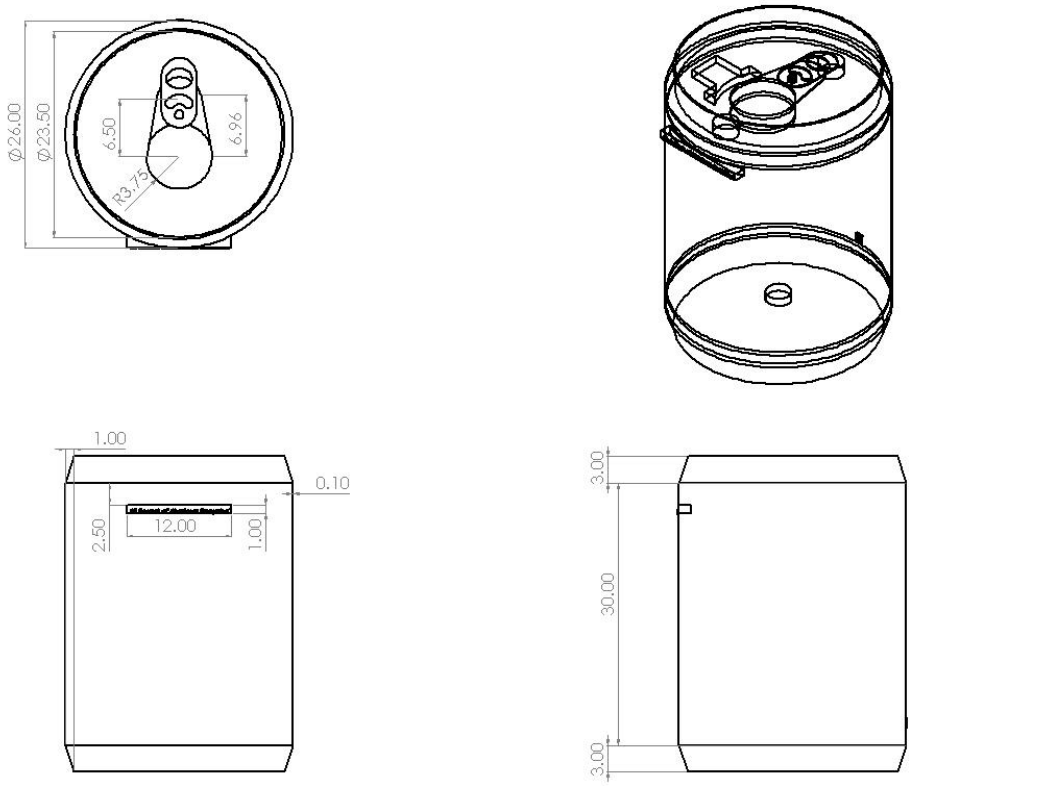

5.1.2 Parts List

It is important to display all of the individual parts so that the product can be clearly communicated. Our dimensioned Parts (Figure 19) are all of the main components of the recycling bin.

Figure 19- Parts

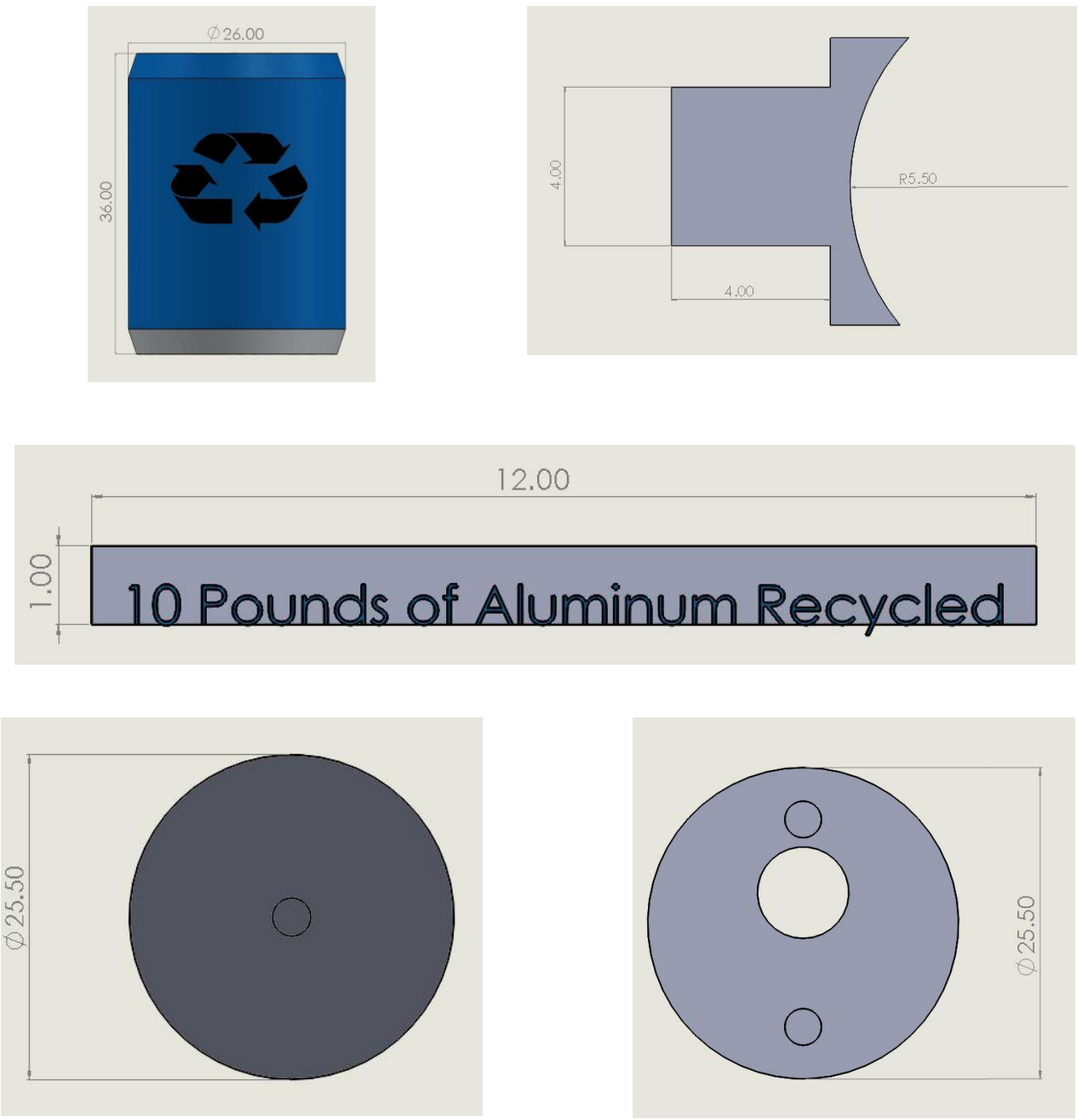

5.2 Bill of Materials

To give more details about all the components of the product, a Bill of Materials (Table 10) had to be made. The bill of materials lists all the function and the price of the parts, as well as their dimensions and other information. In the Bill of Materials, all of the specifications of the product are explained. The reason that the quantity of each component is 2900 is because there are 290 buildings on campus, and we thought that there should be 7 bins inside and 3 outside.

Table 10- Bill of Materials

Part Number	Part Name	Qty	Function	Approximate Mass (in pounds)	Material	Dimensions	Cost (per bin)
1	Body	2900	Hold, Stabilize, Structure	28.50	Aluminum	Height: 36 Diameter: 26	22.80
2	Scale	2900	Measure the weight of cans inside the bin	25.23	Aluminum	Height: 2 Diameter: 25	20.18
3	Motion Sensor/Speaker	2900	Senses when a can is thrown in the recycling bin and make an applause sound	0.55	Polyethylene	Length: 4 Width: 4 Height: 1	40
4	Counter	2900	Shows amount of aluminum saved by recycling	0.21	Polyethylene	Length: 12 Width: .5 Height: 1	25
5	Crusher	2900	Compresses aluminum inside trash can	24.89	Aluminum	Height: 2 Diameter: 25	19.91

5.3 How does it work?

Most of the systems in our product are very basic. The scale measures the weight of aluminum using a spring like a typical scale would use. The motion sensor/ speaker consists of a regular motion sensor and a speaker that could be bought. For the screen, a simple LCD screen would be used to display the amount of aluminum used. All of the systems that are in the product are very basic.

5.4 Benchmarking

In order to ensure that our product matched up to other products on the market, we benchmarked our product against three of its competitors. We made a set of criteria, and ranked each concept from 1 to 5. Based on our results from our benchmarking, we decided that our product was better than the other designs, since it ranked high in all of the categories except for one. Based on the results from our benchmarking, our product is better than the others because it fits our needs statements and has a lot of features that are not seen in other recycling bins on the market.

1=Lowest 5=Highest	Our Final Concept	Rubbermaid® Slim Jim® Recycling Container, 23 Gallon (PSU)	Recycling Container - Green 15 Gallon	Rubbermaid® Recycling Can with Wheels, 95 Gallon
Weight	5	1	1	3
Price	4	2	3	5
Volume	4	3	2	5
Wheels	1	1	1	5
Lid	5	1	1	5
Size	4	3	2	5

6.0 Conclusion

In conclusion, our team successfully designed an aluminum recycling bin that would be sustainable and use the intrinsic properties of aluminum. We were able to completely redesign a recycling bin and add a lot of systems to the bin to give a lot more features and get people to recycle more. Our team is confident that by using this recycling bin, more people around campus would recycle, resulting in more aluminum being recycled and reused. In the introduction section, we were able to decide upon our goals for the project. In our assessment of the customer needs, we were able to come up with general needs and decide what our specifications for the final product were. In our research section, we learned about the recycling process, the process of making aluminum, as well as the intrinsic properties of aluminum. In our concept generation phase, we were able to generate concepts that fit our customer needs. In concept selection and prototyping, we narrowed down and chose a concept and then added more features to our product. In our final design stage, we clearly communicated and displayed the design. We decided that our product accomplished all of our needs statements, because it made the recycling bin more noticeable and more common around campus. We went through the whole design process and were able to design a better and more efficient recycling bin, and we then communicated the design well. We were able to accomplish the mission statement that was given to us, and successfully accomplished the task that Alcoa set before us by designing a better recycling bin by using the design process.

Bibliography

About Aluminium." *Constellium*. Constellium, 2 Oct. 2012. Web. 08 Dec. 2013. <http://www.constellium.com/aluminium-company/aluminium-properties-and-uses>.

"Alumina Refining." *Alteo*. Alteo, n.d. Web. 16 Dec. 2013. <http://alteo-alumina.com/en/alumina-refining>.

"Aluminium." *WebElements*. University of Sheffield, n.d. Web. 14 Dec. 2013. <http://www.webelements.com/aluminium/>.

Bentor, Yinon. Chemical Element.com - Aluminum. Dec. 16, 2013 <http://www.chemicalelements.com/elements/al.html>.

Das, Subodh K., and Margaret Hughes. "Improving Aluminum Can Recycling Rates: A Six Sigma Study in Kentucky." *Minerals, Metals, and Materials Society*. Minerals, Metals, and Materials Society, 2006. Web. 08 Dec. 2013. <http://www.tms.org/pubs/journals/jom/0608/das-0608.html>.

"Recycle- The Facts: Aluminum." *Recycling Coalition of Utah*. Recycling Coalition of Utah, n.d. Web. 8 Dec. 2013. <https://utahrecycles.org/get-the-facts/the-facts-aluminum/?UTAHRECYCLES=fhfvunoizt>.

"Recycling Container - Green 15 Gallon." *Global Industrial*. Global Industrial, n.d. Web. 08 Dec. 2013. <http://www.globalindustrial.com/p/outdoor-grounds-maintenance/garbage-recycling/containers-recycling/recycling-container-green-15-gallon?infoParam.campaignId=T9A>.

"Recycling Facts and Statistics." *Keep America Beautiful Incorporated*. Keep America Beautiful Incorporated, 2013. Web. 07 Dec. 2013. <http://www.kab.org/site/PageServer?pagename=recycling_facts_and_stats>.

"Rubbermaid® Recycling Can with Wheels, 95 Gallon." *ULINE*. ULINE, n.d. Web. 08 Dec. 2013. <http://www.uline.com/Product/Detail/H-2837/Recycling-Containers/Rubbermaid-Recycling-Can-with-Wheels-95-Gallon?pricode=WU336>.

"Rubbermaid® Slim Jim® Recycling Container, 23 Gallon - Blue." *ULINE*. ULINE, n.d. Web. 08 Dec. 2013. <http://www.uline.com/Product/Detail/H-1385BLU/Recycling-Containers/Rubbermaid-Slim-Jim-Recycling-Container-23-Gallon-Blue?pricode=WU336>.