EDSGN 100 Design Project #2
Final Design Report

Recycling of Advanced High Strength Steel

Introduction to Engineering Design
EDSGN 100 Section 018

TEAM **BLUE**

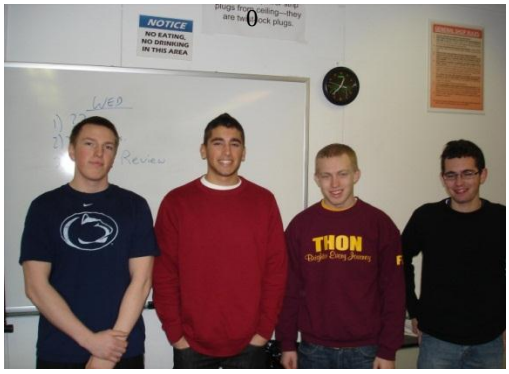

David Spadaro: djs573@psu.edu
Marc Hollman: mah573@psu.edu
Harrison Worsley: hkw5728@psu.edu
Kenny Surano: kds5292@psu.edu

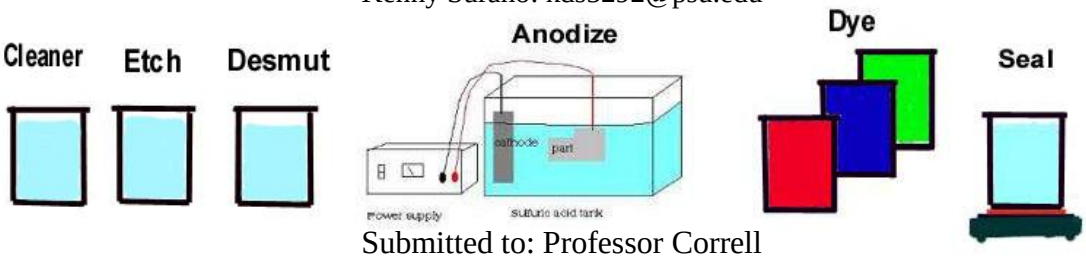

Submitted to: Professor Correll
Date: 04/30/2012

Executive Summary

The objective the team had to meet while completing this project was to generate a concept which would help ArcelorMittal effectively separate would high and low alloy steel from one another without compromising the overall value of the steel as well as keeping environmental safety in mind. Our design process is thoroughly laid out within the report stating the steps the team took with this project beginning with concept generation to a detailed description of our project solution which is a process called anodizing. Through electrolysis, the steel will become dyed a certain color which will help identify various alloys. Each alloy can be deemed a certain color which will help when separating them into piles of high and low alloy steel. This idea will take time to implement, but when it starts taking affect, it will be a highly accurate process.

Table of Contents

1.0 Introduction 3

2.0 Problem Statement 4

3.0 Customer Needs, Research, and Project Objectives 6

4.0 Conceptual Designs 8

4.1 Concept Generation 7

4.2 Concept Screening Matrix 10

4.3 Concept Development 11

4.4 Concept Selection Matrix 15

5.0 Detailed Design 16

6.0 Conclusion 19

7.0 Reference 20

1.0 Introduction

The purpose of this project was to develop a more effective cradle to cradle process for the life cycle of steel. The current cradle to cradle process that steel undergoes does not effectively separate the different alloys of steel, and when different alloys are combined, the end result is an alloy of steel with unexpected physical properties. ArcelorMittal was affected by this unfortunate combination of alloys by an engine produced from their steel rupturing, from steel that had an apparently low grade compared to what was expected. The context of this project involves how ArcelorMittal will be benefited from our solution, since they are the corporate sponsors of our project. This constrains our solution to be not only effective, but beneficial to ArcelorMittal itself.

The need to effectively separate the different alloys of steel is more apparent than ever, and the root cause of why our class is assigned to take on this problem. To solve this problem, our design team came up with a list of eight initial concepts that could potentially solve the problem. The concepts were them passed through the concept screening matrix, where the team decided to continue only three concepts, because the other concepts ranked very low on their net ratings.

Our team was left with two solutions that prevent the alloys from becoming mixed, and one that actually separated the alloys after they had been mixed. Concept D involved auto manufacturers taking upon an end of life vehicle program (ELV) that would take the car once it was reduced to scrap quality, and have all of the alloy concentrations on record, and would be responsible for the disassembly, and collection of all of the different alloys for each part of the

vehicle. Concept A, Steel Anodizing involved anodizing known alloys of steel with colors, so that whatever the steel is used for could be easily separated by color, and melted down with all like alloys. Concept C separated all of the elements within the steel by dissolving them all simultaneously with sulfuric acid, and recollecting them by electrolysis, which would take the metals out of solution. After our screening matrix, the team developed our Analytical Hierarchical Process (AHP) chart, and developed weights for our different criteria in comparison to one another. The team multiplied each of the weights by values that were assigned each of the solutions generated based on how well each solution would meet each of our criteria in the concept selection matrix, and decided that Steel Anodizing was the best solution to ArcelorMittal's problem.

With our concept selection of Steel Anodizing, it was decided that by color anodizing different alloys of steel would be the most effective method of separating, and keeping different alloys of steel separate from each other. It would be quick to implement, accurate, effective, and also cost effective, making it our most favored solution. With our solution, this report will further discuss our preliminary research, our project objectives, our concept development process, and conclusions in detail.

2.0 Problem Statement

In today's world, there has been more of an emphasis placed on a "Cradle-to-Cradle" cyclic form of production through recycling and reuse of old materials. Currently, most materials go through the "Cradle-to-Grave" cycle in a linear fashion of production which requires an unlimited amount of resources. Nowadays, more and more companies are attempting to adopt "Cradle-to-Cradle" processes to ensure more sustainability. Our corporate sponsor,

ArcelorMittal, a steel manufacturer, wishes to make their steel manufacturing a more sustainable process to promote a healthier environment and ensure a better future for our planet.

Currently, steel manufacturing is a highly complex process which involves the creation of new alloys of steel utilizing different types of metals such as Manganese and Chromium for example. Each alloy of steel has a very specific balance of elements within it and messing with this balance can cause deformities to develop with the alloys. These deformities can weaken the structural integrity of the steel, thus degrading the value of these steel alloys. Even mixing different types of alloys of steel can create deformities. These deformities can be created by mixing in the wrong amounts of certain metals as well as mixing together different alloys of steel. High grade steel alloys have a very specific chemical balance and straying from this specific chemical equation can cause the steel to be of a lower grade. The current process ArcelorMittal uses has difficulties separating the different alloys of steel from the other types of junk metal that comes into the plant via scrap metal from junkyards. In order to separate the high alloy steel from junk, the system will require a complex process.

It is now our job to design a new system that can repair this broken system of steel manufacturing and recycling. Our goal is to develop a new, more efficient system that can properly sort all types of metal. This new system must be more proficient than the current system in place at ArcelorMittal. The system can be implemented at any time during the life cycle of steel, from mining of the natural resources to manufacturing to disposal; the system must enable the end scrap metal to be more efficiently sorted into unneeded junk metal and the high alloy steel that ArcelorMittal are looking for. By designing a new process of steel sorting and recycling, the team would accomplish two goals. The process can guarantee a higher grade of steel created, which in turn upholds a better structural integrity for products created with these

steel alloys. This process also have the opportunity to create a more cyclic sustainable process that is similar to the “Cradle-to-Cradle” methods used thus ensuring less use of new materials harvested from the Earth and promoting a healthier environment.

3.0 Customer Needs, Research, and Project Objectives

Steel has become one of the most important materials use on Earth. Skyscrapers, cars, and many other objects use this versatile material. Composed mostly of Iron, steel uses Earth’s resources that cannot be renewed. For this reason, recycling of end-of-life steel is favored by steel manufacturing companies to try to limit the amount of raw materials being extracted, refined, and manufactured. But with the trend of pushing for more recycled steel, the needs of the customers still need to be satisfied. Steel is subcategorized into many different alloys, each with their own unique properties determined by their components. Customers still want each alloy to prescribe to the know properties, even if recycled steel is put back into the manufacturing process. The quality and composition of the steel must remain at the high quality the use of raw materials and non-recycled materials give. Also as always, customers do not want a huge spike in price, so the process of using more recycled steel cannot dramatically increase the cost. Generally, the customers want the steel to stay relatively the same, with either no change in price (or a drop), and to better impact the environment by using fewer natural resources. ArcelorMittal wants its products to stay at the same high-quality, affordable terms, but increase the use of recycled steel in the manufacturing process.

To determine which consumer needs believed to be most important, the team needed to develop an Analytical Hierarchical Process (AHP) chart. The purpose of the AHP chart is to see which consumer needs the team believes is valued most. The chart weighs each selection criteria

against each other to determine which one is more important. The higher the weight, the more important that consumer need is compared to the other needs. By the AHP chart generated by the team, it was determined that effectiveness and accuracy were the two most important consumer needs. Table 3.1 shows our AHP chart and the results of it.

Selection Criteria	Cost	R. Cost	Safety	E. I.	Time	Effect.	Acc.	Total	Weight	
Cost	1	2	3	0.5	1	0.25	0.25	8	0.0984	9.84
Running Cost	0.5	1	0.5	0.33	0.5	0.2	0.2	3.23	0.0397	3.97
Safety	0.33	2	1	0.33	0.5	0.25	0.25	4.66	0.0573	5.73
Environmental Impact	2	3	3	1	0.33	0.2	0.2	9.73	0.1197	11.97
Time	1	2	2	3	1	0.33	0.33	9.66	0.1188	11.88
Effectiveness	4	5	4	5	3	1	1	23	0.2830	28.30
Accuracy	4	5	4	5	3	1	1	23	0.2830	28.30
							Total Weight	81.28	Sum	100

Table 3.1 Analytical Hierarchical Process (AHP) Chart

In our design process, research was found to help aid us in developing a possible solution to the problem posed to us. Our team put research into finding the composition of steel alloys, and the properties that each new addition in the steel making process adds to the final product. Our research also found the different properties, such as hardness and melting point, of different steel alloys. This information could be very helpful in generating concepts to solve the problem. Other teams also did research and presented to us for to use as well. Concepts presented included the end-of-life vehicle process, the steel-making process, the scrap dealing process, and the recyclability of steel. Many of the concepts the team learned in the other teams' presentations were basic and general.

For this project there was one main objective, and one secondary objective. The main objective laid down by ArcelorMittal was to design a process that effectively recycles steel from scrap metal back into the manufacturing process, specifically the steel in the automotive industry. This all needs to be down without adversely affecting steel quality by using recycled materials. Quality can be reduced when a large amount of unknown alloys are all being recycled together. This can cause unknown amounts of different elements to be in each batch of steel. Having an unknown amount of these can cause unknown properties in the steel and can adversely affect the quality. The secondary goal is to decrease the cost of producing the steel. While this is not a main goal by ArcelorMittal, anytime you can reduce cost of production, your job is being done right. For these reasons, our team went on to design a process that would separate different alloys of steel when they are to be recycled and scrapped. Our goal was to develop a way, in any process of the steel or auto manufacturing process, to separate steel into different alloys for recycling.

4.0 Conceptual Designs

4.1 Concept Generation

Concept generation is a very important step in the design process. This is when, as a group, the team collectively come up with as many possible solutions to the project objective as possible. It's very important to not throw out any idea that is thought of because you never know which idea you may end up using in the end after the concept selection process.

The instructor of the class gave each team a homework assignment one week. The assignment was that each team member was to create their own concept and bring it into class. From there, the team collaborated as a group to create even more ideas, or even branch out on the

ideas brought in by other team members. By the end of the assignment, the team had come up with eight total ideas including; coloring the steel, using melting points, acid breakdown of the steel, ELV program, imprinting of the steel, separation by hardness, density, and malleability. Figure 4.1.1 details all of the original concepts.

Concept	Description
A	Color treating the different alloys of steel. Each alloy has a specific color to make them easily distinguish the other alloys. Since each steel all has its own color, a system can be implemented at all plants so that steel brought from other plants may still be distinguished based on colors. The color treatment happens during steel production, so the color treatment lasts during the lifetime. Even if the steel is painted or rusted, that can be removed to show the original color from color treatment.
B	Separating alloys by melting points: Each alloy has a different melting point, so by raising the temperature of the steel in the melting vat to known alloy melting points, the alloys will serially melt, and be separated from the solid steel remnants, which would have higher melting points, and would be liquefied when the temperature of the vat matches their melting point.
C	Use different acids to break down the steel into its original components, and use reverse reactions to collect the metals out of solution.
D	Implement a national system for the disposal of ELV (end of life vehicles). This program would require that all ELV would return to the car manufacturers and from there, the car manufacturers would separate the car into raw materials. The car manufacturer would be aware of the type of steel alloy used to make the frame and would be able to resell it to the steel manufacturing plants. This would prevent the excess of unidentified scrap metal coming into the plant.
E	When the steel is first created from the elements and minerals that are brought in from being mined from the ground, it is created into steel. Right after this steel is created, the company that created the steel should imprint something onto the steel in a very small place which can be deciphered into a code which states which elements and how much of each element was put into the furnace to create that steel. This will allow companies like ArcelorMittal to identify what is in the steel scrap that they obtain and are going to be breaking down into high alloy steel and scrap steel from using the furnace.
F	Separate the metals through hardness by prodding the metal samples with very hard probes, and seeing the force needed to dent the metal by a given distance, since each metal has its own density, each alloy should have a different force to distance ratio for how much force it took to imprint the metal a given distance.
G	Place the metal that is received in a tank of water. This will allow us to test the density of the various metals. All alloys have varying densities therefore by placing the scrap metal into water, it can evaluate which metals are which by how long it takes them to get to the bottom of the tank of water.
H	Since different steel alloys are more malleable than others, a simple way to determine which type of alloy of steel it is to bend the metals to see how malleable the alloy is. The more malleable it is, the less amount of carbon that is the steel.

Table 4.1.1 Concept List

The team knew that from the initial research that was done on the steel manufacturing process that what was wanted an idea that could effectively separate all the alloys of steel from one another because there are many different types. The initial research helped us to learn about the steel manufacturing process, including the properties of steel and the blast oxygen furnace that ArcelorMittal uses to melt down the steel it gets. This helped us to give a jump start on what kind of ideas the team should be thinking of.

4.2 Concept Screening Matrix

The next important step in the engineering design process is to start eliminating some of the weaker original concepts. A very useful tool used by engineers to start eliminating concepts is a concept screening matrix. A concept screening matrix grades each of the original concepts based on a reference. The reference is the current system in use today. The grades given out are pluses (+), minuses (-), and zeros (0). A plus preforms better in that area, a minus preforms worse, and a zero preforms about the same as the current process being used. At the end, the totals are added up and a score is given to each concept. The concepts with the highest scores are then further developed while the concepts with the lower scores are dropped.

The concept screening matrix used by the team found that three concepts from the original eight would be further developed. The other 5 would be dropped. The reason the three passed was because they ranked very high according to the consumer needs shown in the AHP chart. The three concepts that were to be continued according to the screening matrix are concepts A, C, and D. Figure 4.2.1, pictured below, shows the concept screening matrix and how well each concept did.

	A	B	C	D	E	F	G	H	Reference
Cost	0	-	+	+	-	-	+	+	0
Effectiveness	+	0	-	0	0	-	0	-	0
Time	+	-	+	-	-	-	-	-	0
Accuracy	+	+	0	+	+	-	-	-	0
Running Cost	+	-	+	+	-	-	+	+	0
Ease of Separation	0	-	-	+	-	-	-	-	0
Environmental Impacts	+	-	+	+	-	+	+	+	
Pluses	5	1	4	5	1	1	3	3	
Minuses	0	5	2	1	5	6	3	4	
Sames	2	1	1	1	1	0	1	0	
Net	5	-4	2	4	-4	-5	0	-1	
Rank	1	7	3	2	8	7	4	5	
Continue	Yes	No	Yes	Yes	No	No	No	No	

Figure 4.2.1: Concept Screening Matrix.

The reason concepts A, C, and D were continued was due to the high scores the received. They all had mainly grades of pluses or zeros on the selection criteria. Because of that, the team thought that these concepts had the best chances of being able to solve the problem presented by ArcelorMittal. These concepts were then fully developed to see which ideas would perform best to solve the problem.

4.3 Concept Development

Each concept that made it past the concept screening matrix was then fully developed. Each team member put research into the concepts to see how the concepts could possibly be developed from concepts to actual solutions to the problem.

The first concept was concept A. This concept began as color treatment of the steel. The original idea of this was to simply add dye to the steel during the steel manufacturing process while it is in the basic oxygen furnace. After more in depth research, a more probable way to color treat would be a process known as anodizing. Anodizing is an electrolytic passivation

process that involves thickening the outside layer of oxide on metals. Even though iron and other ferrous metals rust when they are oxidized, it is still possible to anodize steel alloys. The first step to change in the typical anodizing process would be to spray the finished steel with a metal spray with aluminum content in it. From there, the dangers of creating iron oxide from anodizing are eliminated and the process can go on as planned. Another change in the process is the changing of the acid used. Sulfuric acid is the typical acid used in anodizing, but for steel, it would be suggested to use nitric acid instead.

Before one can anodize a certain object, one has to cleans and desmut the object. Then, the process can begin. Anodizing works by using the process known as electrolysis. The part that one wants to anodize would be the anode in the electrolysis process. Electrolysis is run through and an outer oxide layer is created on the object being anodized. This oxide layer makes the object more resistant to corrosion and makes the part slightly strong, while taking away malleability. After the electrolysis process is complete, a dye can be added to the part. There are several pores within the oxide layer. The dye can be added to the part and it will seep into the pores. From there, the dye can be sealed with a sealant to prevent dye bleed out. From there, the part is completed.

Concept C involves chemical reactions between a conglomeration of unknown alloys of steel, and an acid to harvest the elements of the steel separately. From start to finish, the cars will be received into the scrap yard, and crushed as is today, using current techniques to separate the useful metals from the waste products such as plastics, and glass, and using a car crusher to reduce the metal components into smaller, more workable pieces. After the metal is crushed into smaller pieces with a higher surface area, and separated from undesirable substances, ArcelorMittal will collect all of the metal into a large reaction chamber, and treat it with sulfuric

acid that will corrode the metals according to their ionic charges. For example, one could treat the metal conglomerate with Sulfuric acid, which will react with all of the different metal cations in the steel mix to produce metal sulfates, and Hydrogen Gas. In equation form: $H_2SO_{4\,(aq)} + Fe^{3+}_{(s)} = Fe_2\,(SO_4)_{3(aq)} + H_{2\,(g)}$

With the aqueous Iron Sulfate, one can separate the Iron from the Sulfate by a chemical process known as electrolysis, or electrically exciting the solution with high amounts of voltage in order to break the Iron Sulfate in solution into its constituent Iron, and Sulfate ions. In equation form: $Fe_2\,(SO4)_{3(aq)} + 2e^- = Fe_{(s)} + SO_4^{2-}$

From this step there would be a high volume of solidified Iron attached to the anode in the electrolysis reaction vessel, and would need to heat the anode to harvest the purified Iron from it. Similar processes would occur for all of the other metal sulfates in solution, such as Manganese Sulfate, Nickel Sulfate, and Chromium Sulfate. After the steel had been treated with acids, the steel manufacturer would be left with other elements such as Phosphorous, Sulfur, Carbon, and Silicon which are nonmetals with a negative ionic charge, and would require being treated separately with strong bases to corrode them in order to separate them through electrolysis later on. In equation form: $S_{(s)} + LiOH_{(aq)} = Li_2S + OH^-$

However, the background chemistry regarding where certain elements are most stable when reacted with Sulfuric Acid, and Lithium Hydroxide is very complicated and perhaps unreliable since some elements such as Manganese can exist in several different oxidation states. Regarding electrolysis, several experiments would be necessary to determine how accurately the metals can be separated out of solution with different voltages being input through

the probes, which would cause the metals to ionize, which requires high amounts of energy to begin with.

The last concept that made it past the screen matrix was concept D. Our concept in helping to reduce the unwanted alloys in scrap and making the scrap more accurate and higher quality is to design a program with End of Life Vehicles (ELVs). ELVs are automobiles which are no longer able to be driven and are usually sent to the scrap yard to be stored, or for some of the car recycled. Our program in helping to determine the different alloys of steel scrap that are being returned to steel manufactures is requiring car manufactures to detail which alloy of steel is being used in each part of the car. The process then entails all ELVs to be returned to the car manufacturer. Here, the car will be separated, but not processed to scrap, into individual type of alloys. This can be easily done by the manufacturer because they are the ones that know what part of the car is what specific alloy.

After the separation into different alloys the car manufacturer will give the alloys to the scrap dealer, where it processed and shipped to the steel maker like usual, but instead of single batches of unknown alloys and qualities, it is processed individually and kept that way for the steel manufacturer. This process will let the steel manufacturer know what type of alloy is coming to them to be recycled, and with this they should be able to make higher quality, known steel with recycled materials.

The hope is to increase the amount of scrap steel being used to produce new steel, which can lower the cost of the new steel because less expensive raw materials are being used. This gives an incentive to the car manufacturer to comply with this process because the cost of the steel they buy from the producer will be lower. Also because less raw materials are being used,

which the raw materials are a finite resource, this process is good for the environment. More iron ore will be kept on the planet, and fewer processes will be needed to extract it, also lowering the cost of steel production. Overall the ELV process that was just described may have many benefits for not only the quality, but the cost of steel.

4.4 Concept Selection Matrix

The last step in picking which concept to make the solution to the problem is to run the last of the fully developed concepts through a concept selection matrix. The concept selection matrix is a very important tool used by engineers to decide which concept to use. It takes the concepts and gives them a grade from one to five, one being the worst and five the best, on each of the selection criteria from the AHP chart. Then, the weights of each selection criteria are multiplied by the grade the concept scored on that weight and the scores are added it up. The concept that has the best grade, highest number, will be the one that is developed. Figure 4.4.1, pictured below, shows the selection matrix for this project.

		A		D		E	
Selection Criteria	Weight	Rank	Weight	Rank	Weight	Rank	Weight
Costs	0.0984	4	0.3936	3	0.2952	1	0.0984
Running Costs	0.0397	4	0.1588	4	0.1588	1	0.0397
Safety	0.0573	4	0.2292	5	0.2865	2	0.1146
Environmental Impact	0.1197	2	0.2394	3	0.3591	2	0.2394
Time	0.1188	5	0.594	3	0.3564	3	0.3564
Effectiveness	0.2829	4	1.1316	5	1.4145	5	1.4145
Accuarcy	0.2829	4	1.1316	2	0.5658	4	1.1316
Score			3.8782		3.4363		3.3946
Rank			1		2		3
Develop?			Yes		No		No

Figure 4.4.1 – Concept Selection Matrix

The reasons concept A, anodizing the steel, won was because it scored generally high scores on every consumer need. It also scored very well on the two most important parts, Effectiveness and Accuracy. The other concepts scored well too, but not well enough. Concept A just did well in every aspect of the concept scoring matrix, and that is why it was developed.

5.0 Detailed Design

The design that ended up being out solution was concept A. Concept A was the anodizing process of steel. This process was detailed in section 4.3, but how to implement it is going to be described here. The first part of implementing this system requires a system of coloring be created. Each alloy of steel is going to receive a specific color, as to make it easily distinguishable from the others. Every single alloy will require one, so that no alloys are further mistaken for others. Once a universal system for coloring the alloys is agreed upon, the process can then begin. Below is figure 5.1, a CAD (Computer Aided Design) model of an electrolysis tank.

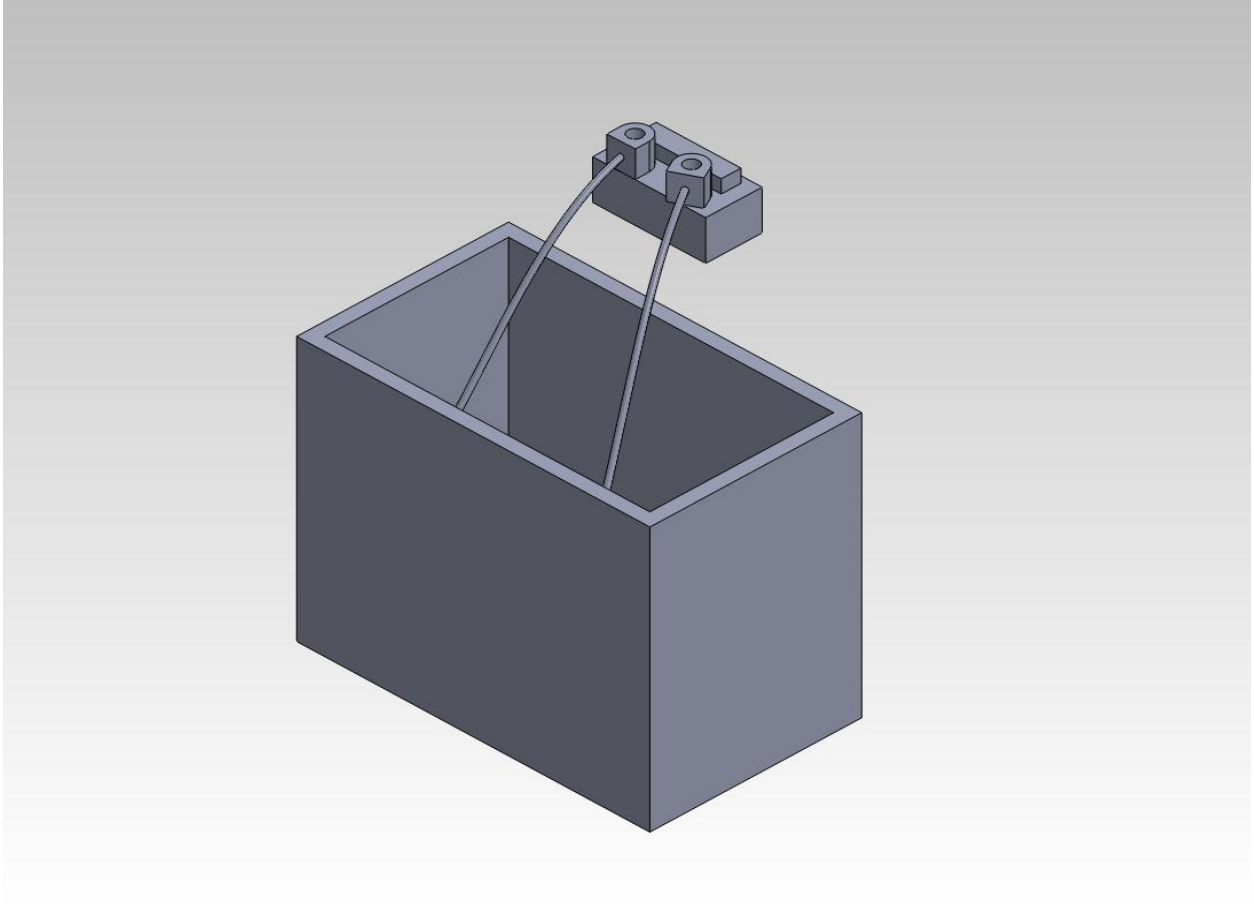

Figure 5.1- CAD Modeling of Electrolysis Tank

The process will take place after each car part is created. The car manufactures are aware of what alloy of steel is being used in the car part. Since they know what alloy is in each part, they will be able to properly anodize and color each part, such that the alloy of that specific part is not confused with a different alloy. From there, the car can be assembled and even repainted such that the car is still marketable. Figure 5.2 shows where in the product life cycle of steel that the anodizing process will occur.

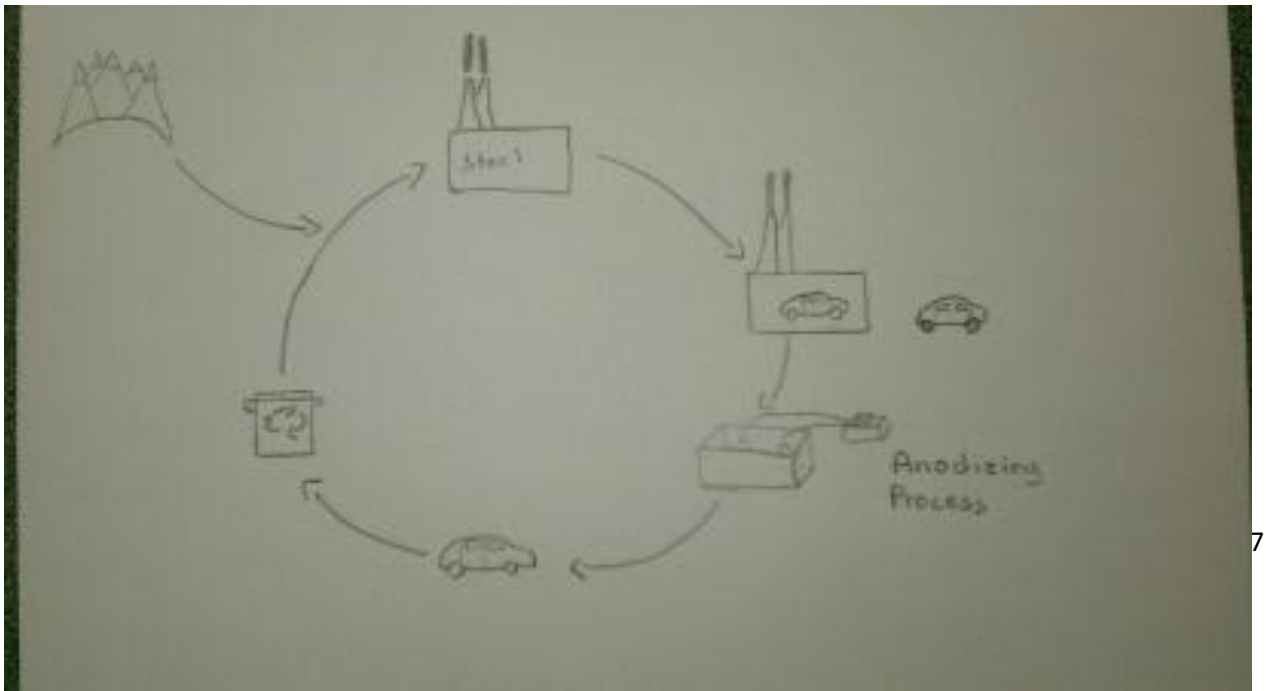

Figure 5.2 - Product Life Cycle

From there, the car will go through its life cycle and eventually become an end of life vehicle (ELV). Once it reaches this point, the car is taken to a scrap dealer. Once it reaches the scrap dealer, the dealer can than remove parts of paint from each part to see the color the part was originally anodized as. The anodized color will last the lifespan of the car, and still be easily able to be seen and distinguished by the scrap dealer. From there, the scrap dealer can sort the car parts into same colors. The greens will go with the greens, the reds with the reds, and so forth.

From there, all of the same colors will be grinded together. They will be kept together from here on out. The scrap dealers, knowing which color is which alloy from the universal system of coloring, can then assure the steel manufacturer, ArcelorMittal, what specific alloys the are receiving. This will allow the steel manufacturer to ensure they are using the proper alloys to create the specific steel they need to make. The team hopes that this solution will allow ArcelorMittal to continue making high grade alloy steel and help prevent any impurities in the steel.

There are some drawbacks to this solution. The first of which is the fact that this will require the vehicles to reach ELV status. For most models, that can take 10 to 15 years. That means that this process will take several years to take effect. So that means that ArcelorMittal will have to continue its current program of using recycled steel. The other drawback is the fact that there is pressure on the scrap dealers to disassemble the car parts and sort it into the various colors. Unfortunately, the team was unable to decide any other way for this process to work. The only way to make this justifiable is to increase the price that the scrap dealers are selling the

steel. Initially, that may increases costs on both manufacturers and consumers, but in the long run, this process will ensure better high grade steel and a greener earth.

6.0 Conclusion

Overall, the group as a whole thought that the project was very successful. The team came up with an effective idea in anodizing the steel that can accomplished the objectives that were set out in front of us very well. ArcelorMittal asked us to design a process that would separate the different alloys of steel at the same time not compromising the value of the high grade steel. With our process, the steel could easily be separated based on different colors pertaining to the various alloys. As an added bonus, the dye used to color the steel actually could be considered as a factor in making the price of the high alloy steel go up because it added a layer to the steel that would help to prevent it from rusting. This process also is very safe for the environment. When coming up with ideas that could be used to satisfy the project objectives, two criteria were very important to us; effectiveness and accuracy. The design needed to be accurate because ArcelorMittal needed an idea that could effectively separate the high grade alloys from the low ones. The process that was came up for anodizing the steel did this very effectively because whomever was separating the steel could easily see from the colors of the alloys which is high a high grade and which is a low grade alloy. The team would consider as a group that the biggest positive seen with our design is that the process is very accurate in deciphering which alloys are which.

With that said, our design does have one flaw in being that it may take a while to implement and start working. ArcelorMittal would have to wait for the cars that the process is first used on to be deemed end of life vehicles which could take up to 10-15 years. After this

time, the process will be used on most cars therefore allowing the system to be in full swing and working effectively.

This project helped teach our group some important lessons that will help us to be successful engineers in the future. The team learned to work well together and that communication is key when completing group projects. The group always had to be in touch with one another so that the team could complete the tasks ahead of us making sure that everything is done on time with full completeness. It also showed that no idea is a bad one and that everything has possibility to become a great solution. The team had a good time working through this project and the group is very satisfied on how the end result turned out.

7.0 Reference

Bibliography

Advanced High-Strength Steels Will Enable Automakers to Meet Tough New Vehicle Emissions Standards. (n.d.). Retrieved April 2012, from http://www.steel.org/en/sitecore/content/Global/Document%20Types/News/2011/Advanced%20High%20Strength%20Steels%20Will%20Enable%20Automakers%20to%20Meet%20Tough%20New%20Vehicle%20Emissions%20Standards.aspx

Anodizing. (n.d.). Retrieved from http://en.wikipedia.org/wiki/Anodizing#Dyeing

Anodizing Aluminum. (n.d.). Retrieved April 2012, from http://www.focuser.com/atm/anodize/anodize.html

Noth Star Chemical. (n.d.). Retrieved from http://www.northstarchemical.com/prod_sulfuricacid_prof.htm

Problem Statement. (n.d.). Retrieved Jan-Apr 2012, from Angel: https://cms.psu.edu/section/content/default.asp?WCI=pgDisplay&WCU=CRSCNT&ENTRY_ID=4D8BA223CBA04E9A9846A2E8C7353888

Science Madness. (n.d.). Retrieved from http://www.sciencemadness.org/talk/viewthread.php?tid=11129

TABLE OF STRONG ACIDS . (n.d.). Retrieved from http://www.chemistry.pomona.edu/chemistry/1alab/www/fall2006/powerptpresentations/5anions/acidbaset.htm

What is Anodizing. (n.d.). Retrieved March 2012, from http://www.anodizing.org/Anodizing/what_is_anodizing.html