The United Nation's Zero Energy Home Report

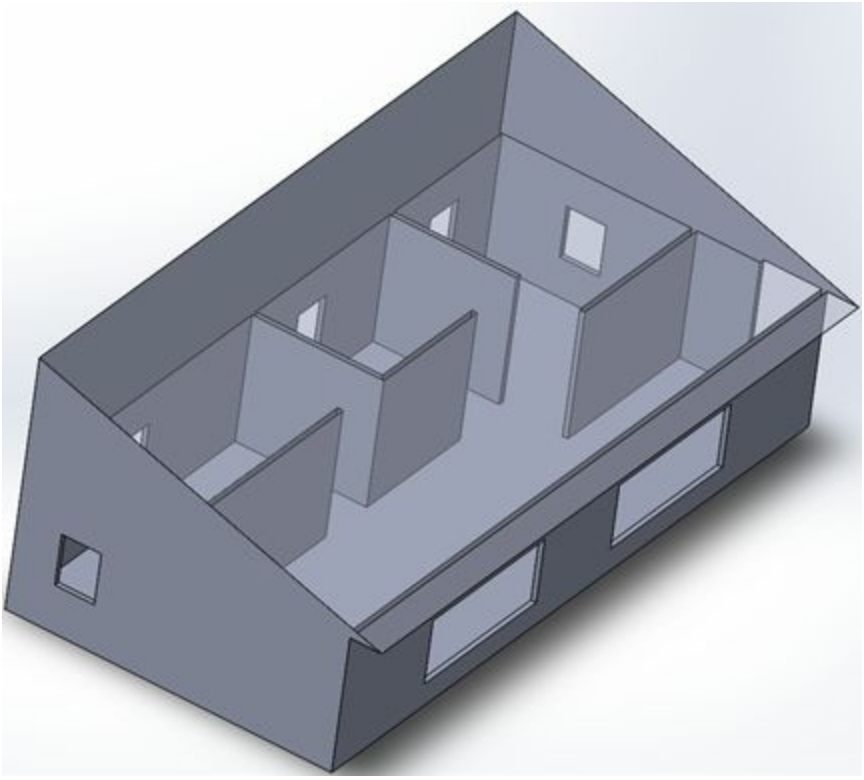

EDSGN 100 Sec 005
Wallace Catanach
16 October 2015

Abdullah Elhawary
aze5179@psu.edu

Ryan Dodds
rzd5243@psu.edu

Michael Sgro
mjs6894@psu.edu

Dina Munyana
ddm5289@psu.edu

Table of Contents

Table of Contents ……1

Executive Summary……2

Introduction……..2

Mission Statement ……...3

Customer Needs ……..4

External Research ……...……5

Concept Generation ……7

Concept Selection ……...……8

Design …….……..11

Cost Model ……16

Conclusion ……17

Works Cited ……..……18

EXECUTIVE SUMMARY

A family of four needed a house in Pennsylvania that nets zero energy consumption over the course of a year. Our resources are quickly dwindling and to prolong our current lifestyles we must look into alternative energy. The objective of this project is to build a house for no more than $140,000 which consumes zero energy over the course of a year by generating enough energy to cover all of its energy needs. The family needs to be suitable for a family of four to live in and also must be aesthetically pleasing.

In creating this design several methods of generating and saving energy were considered. External research was conducted, including market surveys, to help shape our brainstormed designs throughout the process. Once we had several possible concepts, they will be evaluated and eventually ranked on a variety of criteria. From here the solutions will be discontinued or combined to produce our ultimate design. The remaining concepts all found their way into the house design in one way or another. The house located in Erie will feature solar panels and R60 insulation.

The risk associated with this design would be a particularly overcast summer could potentially leave the family without electricity in the winter. The design minimizes this risk by maximizing the sun's potential in terms of energy collection and passive solar design. The final prototype will be presented on October 16th, 2015.

INTRODUCTION

The protection of our environment is an unconditional necessity for a healthy and a better future for our world. It has been proven that the energy we use in our everyday life is enormously harming our environment causing global warming and many other negative effects

to our environment. However, we can avoid the destruction of the environment by being as sustainable as possible, and therefore replace all the energy we use by renewable energy. A zero energy house is an excellent way of being sustainable and protect the environment, since in a net zero energy house, the house is designed to produce the same amount of energy we consume on average and store that energy for consumption it is needed.

MISSION STATEMENT

To realize a net zero energy consumption for our house, we tried to design our house so that the house produces all the energy needed in the house for a year. The house will accumulate energy in summer through the utilization of the power of the sun. In addition to the solar panels, the house will be designed to utilize passive solar design by using few walls, lots of large windows in strategic position and an overhang of a calculated length. The house will also be built to minimize energy consumption with the best appliances available and other such energy saving features.

CUSTOMER NEEDS

Needs Analysis

There were many aspects and features of the house that the customer needed or desired indicated by our project guidelines and the external surveys that we conducted. Some requirements were given to us, like that the house must fit a family of 4 and be affordable. However, some we discovered based on market research of people we surveyed. The requirements we found through this manner were smaller details that are still incredibly important nonetheless, like having enough appliances and a comfortable living room. Compiling this information, we found that the customers need an aesthetically pleasing and fully functional house that nets zero energy consumption, at the lowest cost possible, with several other requirements. We designed our house in a way that it has a good appearance, with temperature regulation and natural energy production systems, so that we have a net zero energy consumption, and all that at a minimum cost.

Needs Matrix

Customer Need	Needs Statement
The house needs to fit a family of 4.	The house needs to be about 1500 sq ft.
The house needs to be affordable.	The house can cost no more than $140,000.
The house needs to be resistant to weather.	The house has to be durable.
The house needs to be aesthetically pleasing.	The house has to be beautiful.
The house needs to be sustainable.	The house has to net zero energy consumption annually.
The house needs separate sleeping areas.	The house must have 2 bedrooms.
The house needs to fulfill the family's lifestyle expectation	The house is fitted with the best modern appliances

EXTERNAL RESEARCH & SURVEYS

Overview

Zero Energy Homes (ZEH) are homes that are self-sustaining and have a net-zero energy balance. Due to this feature, the home does not need to be on the electrical grid as they can produce enough energy. On average, households in Pennsylvania consume 10,402 kWh of electricity each year and have an average square footage of 2,240, which approximately equates 4.65 kWh per square foot (United States 1-2). This means that a ZEH in Pennsylvania with a square footage of 1,537 would need the technology to produce roughly 7,200 kWh of electricity each year. These technologies may include photovoltaic cells, passive solar designs and geothermal systems, wind turbines and hydroelectricity. The reason we need for zero energy homes is that we have created a list of exponentially disastrous environmental concerns from our current living style such as air pollution, water pollution, shortages in natural resources and climate change.

Exploring Technologies

- Photovoltaic Cells & Passive Solar Designs

These two technologies are coupled together because they rely on the same energy source, the sun. The light that we receive from the sun can directly be converted into electricity through photovoltaic cells (PV) or the thermal energy can be used to heat both water and the air within a household by designing the house that optimizes thermal energy dispersion. PV cells work due to a phenomenon known as the photoelectric effect which states that materials are able to produce an electric current when exposed to a specific wavelength of light. Most PV cells are made of silicon, a semiconductor, which is currently viewed as the most efficient means of converting light into electrical energy (Knier 1). PV cells are also the most common installation on ZEH as solar power is viewed as one of the most efficient and clean ways of producing electricity. The problem with the PV cells is that they are rather expensive and are a hefty economic investment, however; their longtime gains exceed their short-time economic and environmental detriments. Passive solar design, on the other hand, is a relative newcomer to the scene of ZEH as the design of the house itself is meant to optimize heat collection, retention and distribution from the sun. Large windows that face the southern side of the house allow large amounts of solar heat to enter the house and then it is stored using a thermal mass which has an emissivity close to 1. Due to the properties of energy dissipation, the thermal energy is distributed throughout the house. Furthermore, the heat that enters the house can be controlled using overhangs, blinds, insulators and awnings as they all limit heat flow ("Passive 1).

- Geothermal Pump

Geothermal heat pumps are heating/ cooling systems that utilize the temperature of the ground. By developing an intricate system of water pipes or the "loop" as it is called, the water circulation allows heat circulation between a house, the heat pump and the earth ("Geothermal Heating 1). The heating and cooling systems are used in winter and summer, respectively, by either absorbing heat from the earth or from the house and circulating that heat. According to the

US Department of Energy, the geothermal pumps can reach up to 600% efficiency during the winter and 250% efficiency on warmer days ("Geothermal Heat 1). Geothermal pumps are a lot less costly than most people think as they start from 3,000$ and can refund their purchase within a decade or two at the most as they significantly cut down electricity bills. Moreover, their lifespan is usually a few decades thus they do not have to be constantly restored (SAVINGS 1).

- Wind Turbine

Wind turbines in this particular application are the small ones that can be installed on the rooftops on households as opposed to the large towering turbines that we have become accustomed to. The turbine converts the kinetic wind energy, that is a result of the uneven heating of the earth, into a rotary motion that generates electricity (SMALL 1). There are a few problems that come with wind turbines. The first being is that they generate less almost 20% less electricity than expected as seen by a report published by the Cadmus Group (Shaw 1). Moreover, a report by the British Energy Savings Trust concluded that wind turbines that were placed on buildings produced underwhelming results (*Location* 4). Lastly, a survey that we conducted showed that wind turbines are extremely aesthetically displeasing.

- Hydroelectric:

Hydroelectricity is generated using dams that utilize that the force of gravity of falling water on turbines that cause them to spin and that in turn generates electricity. Although it is the most common renewable source of energy and extremely efficient, the cost of building dams in order to generate electricity seems farfetched as the task in only to power a ZEH. The benefits to hydroelectricity go far beyond clean energy as it can help combat droughts, which is also something to consider, however; given the scale and cost limitations of the ZEH, it seems unlikely ("10 Reasons 1)

.

Benchmarking

House #	**1**	**2**	**3**	**4**
Location	Lebanon, New Jersey	Charlotte, Vermont	Bend, Oregon	Turners Falls, MA
House size (sq ft)	4,200	2,800	1534	1152
Number of floors	2	2	1	1
URL of web site where info is found	Collegepublishing.us	Collegepublishing.us	http://www.zerohomes.org	builditsolar.com
Number of occupants	A family of 3	A family of 3	4	2
Number of bedrooms	4 bedrooms	4 bedrooms	3	3
Type of heating system	Passive solar heating	Geothermal heat pump	ductless mini-split heat pump	Passive solar heating
Main heating fuel	Passive solar heating	Wind Turbines	Electricity	Solar Panels
Size of photovoltaic system (kilowatts)	9.8 KW	None	5.64 kW	4.94 kW
Solar water heater	Yes	No	Yes	Yes
R-value of wall insulation	R-35 (6°C-m2/W)	R-19 (3°C-m2/W)	R=50	R-42
R-value of ceiling insulation	None	R-56 (10°C-m2/W)	R=60	R-100
Ventilation air heat recovery	No	Yes	Yes	Yes
Predicted or measured annual energy use	1900 KWh	6500 KWh per year	2057 KWH	1949 KWh

CONCEPT GENERATION

A	B	C	D	E	F	G	H	I	J
	Metric	Solar Panels	Geothermal Pump	Many Windows	Efficient Floorplan	Few Walls	Wall Insulation	Ceiling Insultation	Best Appliances
Needs									
House a family of 4					X	X			
Net 0 energy consumption		X	X	X				X	X
Aesthetically pleasing				X	X	X			
Temperature Regulation				X		X	X	X	
Green Materials/Appliances						X	X	X	X
Affordable					X	X			
Durable							X		

CONCEPT SELECTION

Selection Criteria	Energy Source				
	Geothermal	Solar (PV)	(Reference) Passive Solar Design	Wind Turbine	Hydroelectric
Space Consumption	-	0	0	0	0
Net Zero Energy	+	+	0	-	+
Durable to Weather	0	-	0	-	-
Aesthetically pleasing	-	+	0	-	0
Cost Efficient	+	+	0	-	-
Easily Maintainable	-	-	0	-	-
Sums of +'s	2	3	0	0	1
Sums of -'s	3	2	0	5	3
Net Score	-1	1	0	-5	-2
Rank	3	1	2	5	4
Continue?	Yes	Yes	Yes	No	No

Selection Criteria	Weight	Energy Source		
		Geothermal	Solar (PV)	Passive Solar Design
Space Consumption	10%	2	3	3
Net Zero/ Sustainable	30%	4	4	2
Durable to Weather	10%	4	3	5
Aesthetically pleasing	10%	1	4	4
Cost Efficient	25%	3	3	3
Easily Maintainable	15%	3	3	4
Total Score (Out of 5)		3.1	3.4	3.15
Develop?		No	**Combine**	

Selection Criteria	Insulation		
	R40	(Reference) R50	R60
Net Zero Energy	-	0	+
Cost Efficient	+	0	-
Sums of +'s	1	0	1
Sums of -'s	1	0	1
Net Score	0	0	0
Rank	1	1	1
Continue?	Yes	Yes	Yes

Selection Criteria	Weight	Insulation		
		R40	R50	R60
Net Zero Energy	60%	3	4	5
Cost Efficient	40%	5	4	3
Total Score (Out of 5)		3.8	4	4.2
Develop?		No	No	Yes

Selection Criteria	Location		
	Erie	(Reference) Philadelphia	Somerset
Solar	+	0	+
Geothermal	0	0	0
Wind	+	0	-
Hydroelectric	+	0	0
Passive Solar	0	0	0
Sums of +'s	3	0	1
Sums of -'s	0	0	1
Net Score	3	0	0
Rank	1	2	2
Continue?	Yes	Yes	Yes

Selection Criteria	Weight	Location		
		Erie	Philadelphia	Somerset
Solar	50%	5	4	5
Geothermal	35%	4	4	4
Wind	10%	4	3	2
Hydroelectric	5%	4	3	3
Passive Solar	0%	5	5	5
Total Score (Out of 5)		4.5	3.85	4.25
Develop?		Yes	No	No

DESIGN

After completing all of these matrices, brainstorming, and selection, we were finally able to see the fruits of our labor come to fruition. The first step in the modeling was to use Solidworks to build a virtual prototype of our design. None of the dimensions you see below were found haphazardly or randomly. Each one was painstaking debated to maximize utility for the customer. For instance the outside dimensions of the house (20ft x 42ft) were chosen to maximize square footage while still having an elongated south side to allow for passive solar heating via large windows. Because of these windows, it was important to have no walls breaking up the sunlight, so we chose to have the kitchen and living room be large rooms with no walls separating them. Minimizing walls was an important goal throughout the house as we needed to promote a consistent airflow. To accomplish this goal, we combined the bathroom and laundryroom. That helped us make the most of our limited square footage. We were able to have a relatively small house while still providing a large master bedroom and second bathroom. In addition, the family has almost half of the house dedicated to eating and living, which is good because that's going to consume a large portion of the family's time in the house.

Our research and math didn't just shape the inside of the house, it also had a large impact on the outside of the house. After realizing that our window size would be limited by our cost, we found the maximum window area we could use on the house total. After distributing this area amongst the four walls, with emphasis on the south side of course, we had to figure out the dimensions and locations of the windows. the small windows are all rectangular made to maximize the sunlight they let in and are centered vertically to be visually appealing. We contemplated one large window in the south, but we wanted sunlight to be evenly distributed throughout the kitchen and living room, which ultimately led us to decide on two equally large windows that would allow for more effective passive solar heating. We also put research into the dimensions of our roof. The average summer solar angle in Erie is 72 degrees, which means we need an 18 degree roof slope to maximize the solar panels' potential in the summer when the sun is strongest. The overhang was calculated by using the dimensions of our walls and windows, plus the average solar angle. From there it was just a matter of using trigonometry to find the ideal overhang length, which turned out to be roughly 2 feet.

After we had a suitable CAD model, the final step was simply to cut and construct the house using chipboard at a ⅛ inch : 1 foot scale. This proved a decent challenge because it was difficult to make each piece accurate at a small scale. We were very precise in our measuring and cutting of the pieces, but some of them still didn't quite line up when it came time to assemble. When this was the case we recut the pieces to ensure a well fitting, accurate house. We chose to leave the roof detached from the rest of the house to allow people to look inside the house. Then came the fun part! We got to mount and paint our house before labelling the rooms.

The design took a lot of effort and thought. While many things may not be evident with a quick glance at the design, there were many decisions and calculations that went into forming our final model and prototype. It was very exciting to watch our hard work and hours of dedication manifest themselves in a beautiful CAD model and physical prototype.

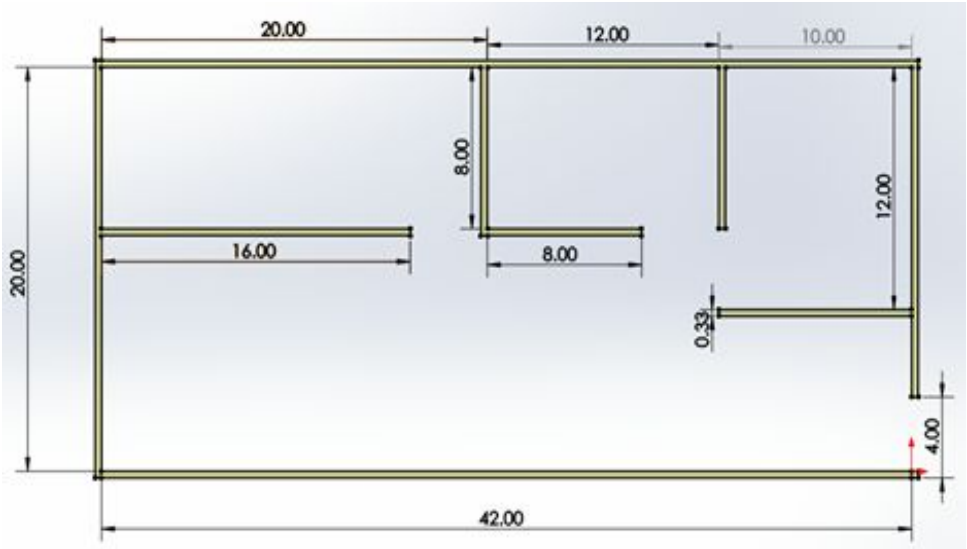
20.00
12.00
10.00
8.00
12.00
16.00
8.00
20.00
0.33
4.00
42.00

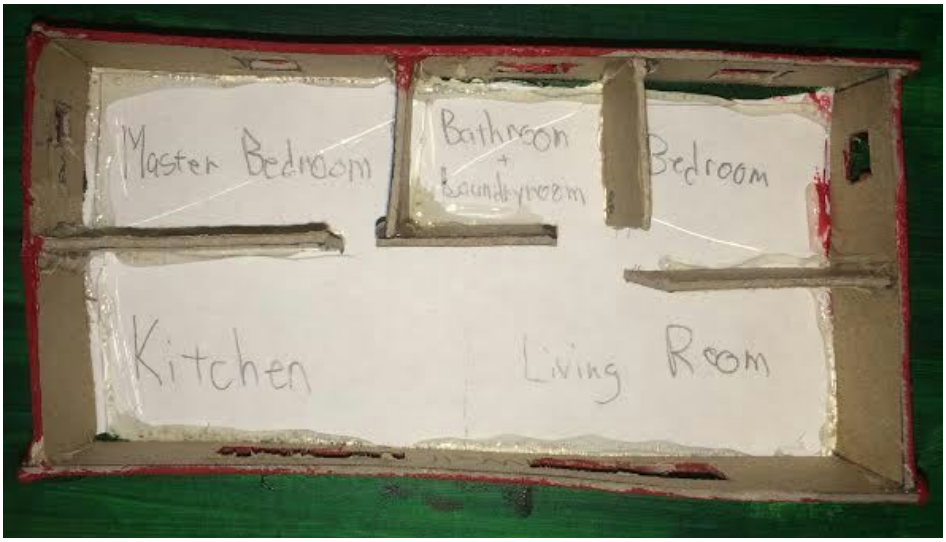
Master Bedroom
Bathroom
+
Laundryroom
Bedroom
Kitchen
Living Room

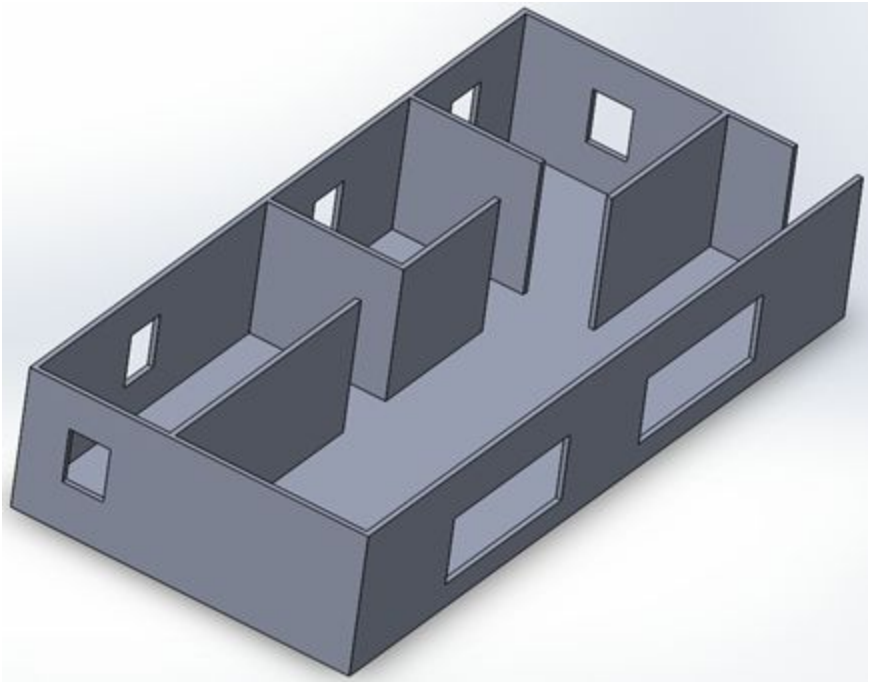

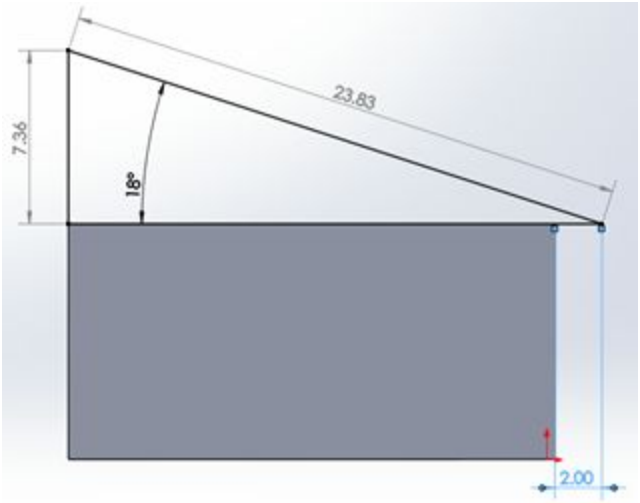
23.83
7.36
18°
2.00

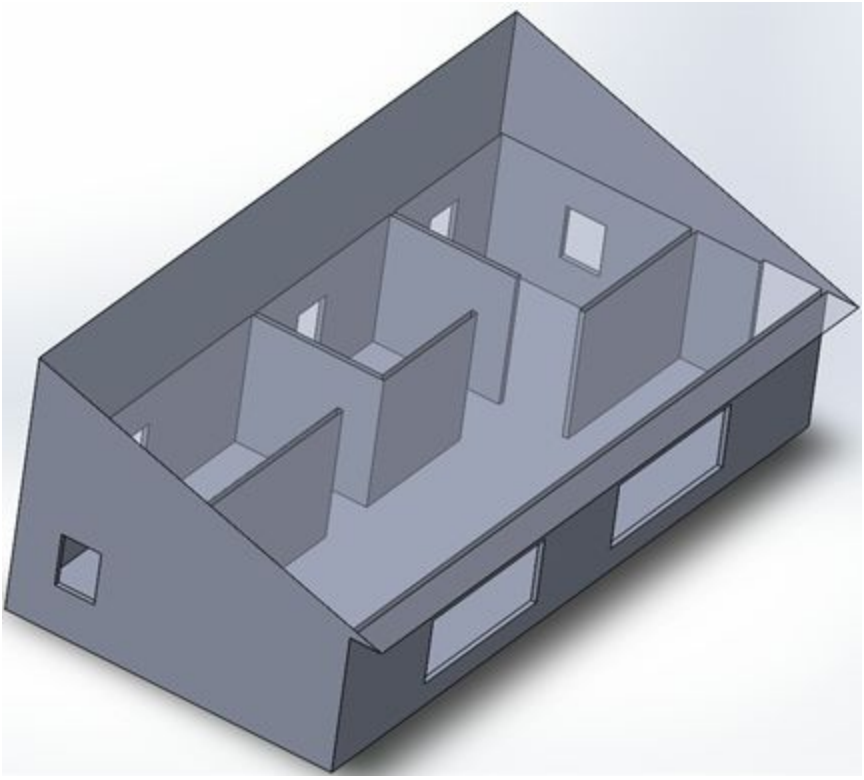

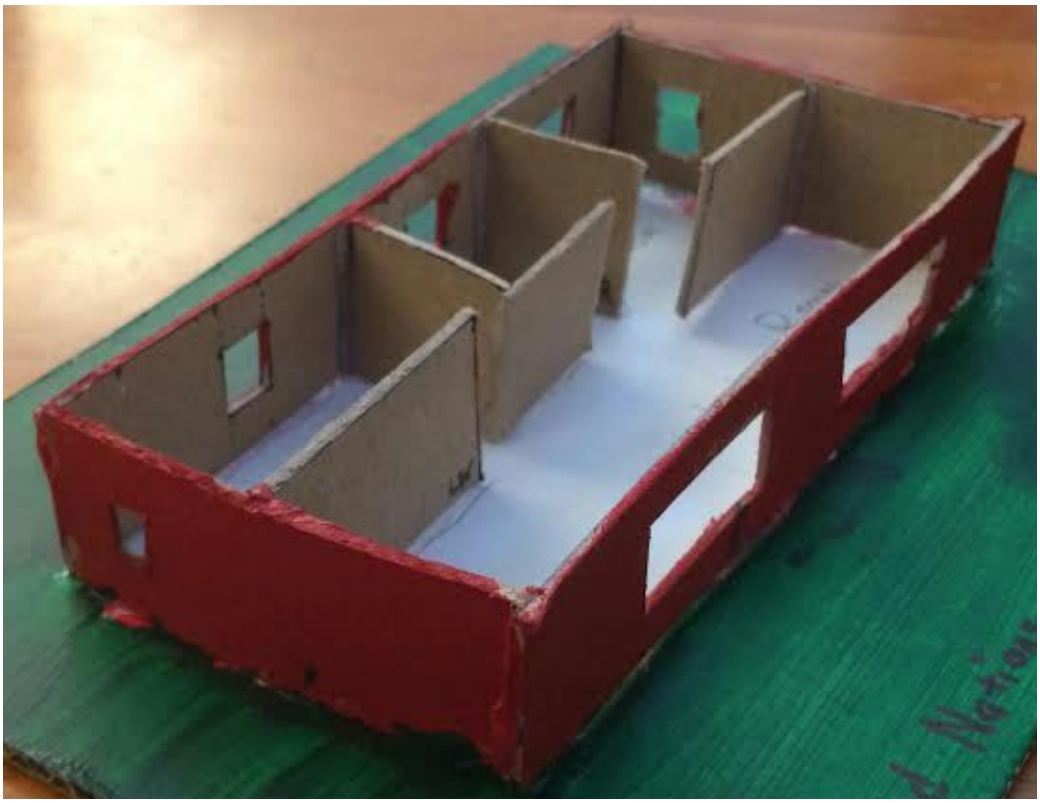

COST MODEL

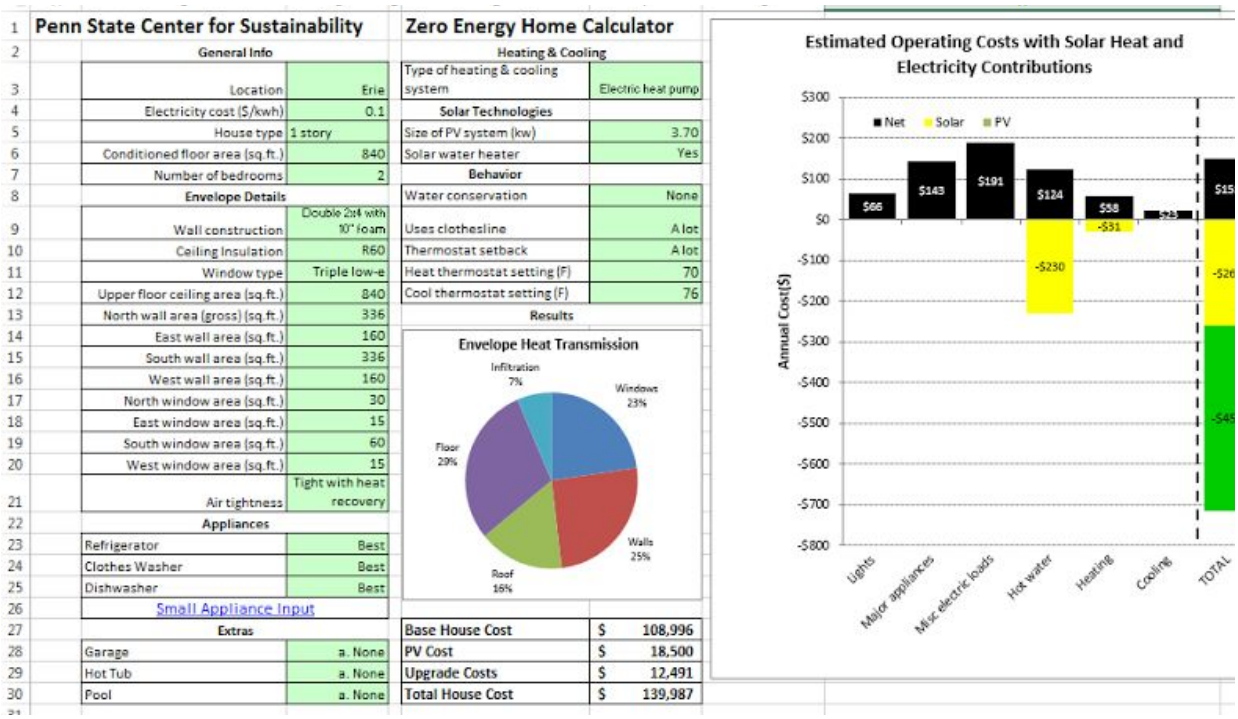

Penn State Center for Sustainability

General Info	
Location	Erie
Electricity cost ($/kwh)	0.1
House type	1 story
Conditioned floor area (sq.ft.)	840
Number of bedrooms	2
Envelope Details	
Wall construction	Double 2x4 with 10" foam
Ceiling Insulation	R60
Window type	Triple low-e
Upper floor ceiling area (sq.ft.)	840
North wall area (gross) (sq.ft.)	336
East wall area (sq.ft.)	160
South wall area (sq.ft.)	336
West wall area (sq.ft.)	160
North window area (sq.ft.)	30
East window area (sq.ft.)	15
South window area (sq.ft.)	60
West window area (sq.ft.)	15
Air tightness	Tight with heat recovery
Appliances	
Refrigerator	Best
Clothes Washer	Best
Dishwasher	Best
Small Appliance Input	
Extras	
Garage	a. None
Hot Tub	a. None
Pool	a. None

Zero Energy Home Calculator

Heating & Cooling	
Type of heating & cooling system	Electric heat pump
Solar Technologies	
Size of PV system (kw)	3.70
Solar water heater	Yes
Behavior	
Water conservation	None
Uses clothesline	A lot
Thermostat setback	A lot
Heat thermostat setting (F)	70
Cool thermostat setting (F)	76
Results	

Base House Cost	$	108,996
PV Cost	$	18,500
Upgrade Costs	$	12,491
Total House Cost	$	139,987

CONCLUSION

Throughout this project we used the engineering process to successfully design and model a zero energy home. Each step in the process was decided by the corresponding step in the engineering process.Through the creation of this house and the accompanying work the team learned valuable skills covering group interaction, the engineering process, and working with limitations. We were able to create a design that satisfied our customer's needs, and met the requirements to be considered a zero energy home while dealing with a strict budget and other very limiting factors.

Works Cited

"10 Reasons for Promoting the Hydroelectricity." ITAIPU BINACIONAL, 25 Mar. 2013. Web. 16 Oct. 2015. <https://www.itaipu.gov.br/en/energy/10-reasons-promoting-hydroelectricity>.

"Geothermal Heat Pumps." Geothermal Heat Pumps. US Department of Energy, n.d. Web. 06 Oct. 2015. <http://energy.gov/energysaver/geothermal-heat-pumps>.

"Geothermal Heating & Cooling." Ground Source. ClimateMaster, n.d. Web. 6 Oct. 2015. <http://www.climatemaster.com/residential/how-geothermal-works/>.

Knier, Gil. "How Do Photovoltaics Work?" How Do Photovoltaics Work? NASA, 6 Apr. 2011. Web. 01 Oct. 2015. <http://science.nasa.gov/science-news/science-at-nasa/2002/solarcells/>.

Location, Location, Location. Sydney: New South Wales Film & Television Office, 2000. Energy Saving Trust, July 2009. Web. 16 Oct. 2015. <http://www.solacity.com/docs/best%20turbine%20trial%20report.pdf>.

"Passive Solar Home Design. " Passive Solar Home Design. U.s. Department of Energy, n.d. Web. 1 Oct. 2015. <http://energy.gov/energysaver/energy-efficient-window-treatments>.

"SAVINGS CALCULATOR." Geothermal Genius, n.d. Web. 06 Oct. 2015. <http://www.geothermalgenius.org/home/cost-calculate.html>.

Shaw, Shawn, Alyssa Rosen, David Beavers, and Dave Korn. "Status Report on Small Wind Energy Projects Supported by the Massachusetts Renewable Energy Trust." *Renewable Trust Energy* (n.d.): n. pag. The Cadmus Group, 10 Nov. 2008. Web. 16 Oct. 2015.

"SMALL WIND ELECTRIC SYSTEMS." US Department of Energy, n.d. Web. 16 Oct. 2015. <http://energy.gov/energysaver/small-wind-electric-systems>.

United States of America. U.S. Energy Information Administration. Household Energy Use in Pennsylvania. U.S. Energy Information Administration, 2009. Web. 1 Oct. 2015. <http://www.eia.gov/consumption/residential/reports/2009/state_briefs/pdf/pa.pdf>.