The United Nation's Emission Reduction Report

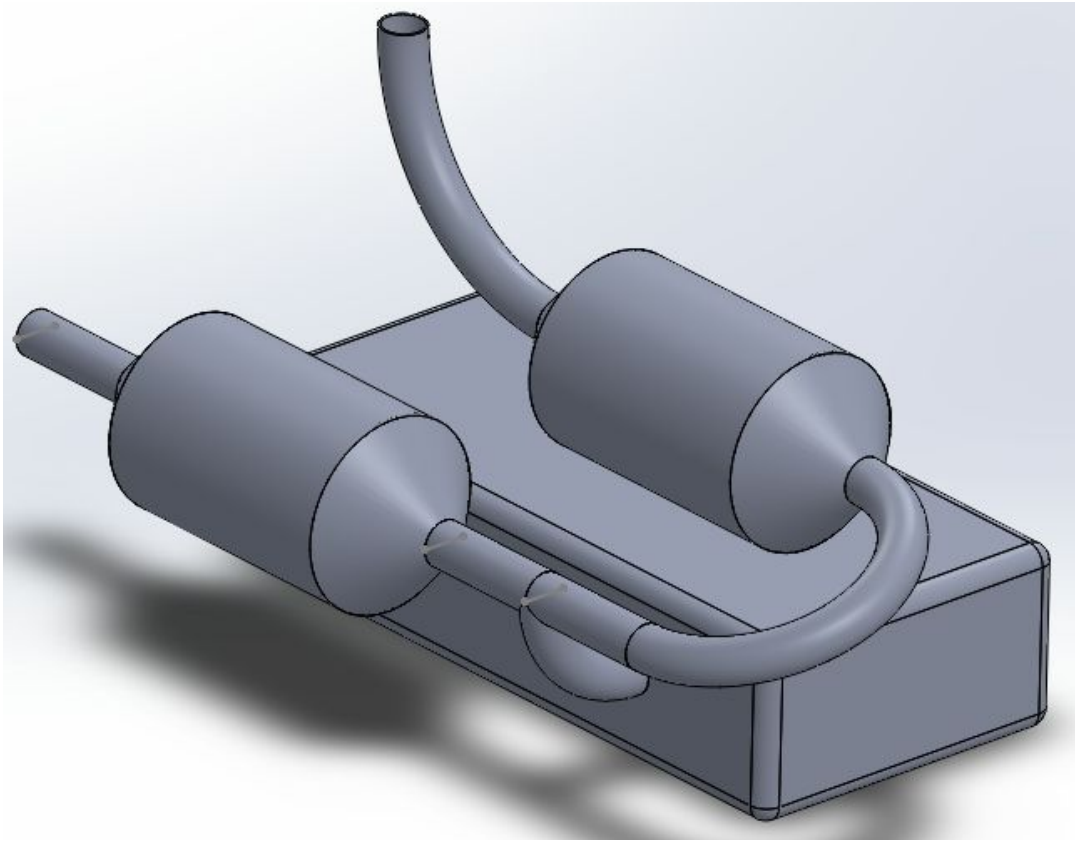

EDSGN 100 Sec 005
Wallace Catanach
December 14 2015

Abdullah Elhawary
aze5179@psu.edu

Ryan Dodds
rzd5243@psu.edu

Michael Sgro
mjs6894@psu.edu

Dina Munyana
ddm5289@psu.edu

Table of Contents

Table of Contents ……...1

Executive Summary……2

Introduction……...…..3

Mission Statement ……..3

Customer Needs …….3

External Research ……...…...4

Concept Generation …….….…10

Concept Selection ……...……..11

Design …….……..14

Cost Model ……18

Conclusion ...…….19

Works Cited ……..……21

EXECUTIVE SUMMARY

The city of Pittsadelphia has expressed its desire for a new train system that addresses the issue of photochemical smog, mainly NOx and PM. The main problem with NOx emitted in high quantities is that it combines with the oxygen in the atmosphere to form acidic substances such as nitric acid, which is recycled as acid rain. NOx emissions also contribute to the presence of particulate matter, or PM as it is more commonly called. Studies have shown that a high PM value correlates to elevated illness levels and premature death. Therefore, Pittsadelphia would like to correct its current environmental path by decreasing NOx emissions and moving their trains from Tier 2 to Tier 3 and/ or Tier 4. Tier 3 constitutes that trains should produce no more than 5.417 g/hp-hr of NOx and 0.1 g/hp-hr of PM. The train must be no wider than 3m and no taller than 4.3m. Moreover, any aftertreatment must conform to Plate L Clearance. Furthermore, any modifications to the outside of the train should not disable it from moving through tunnels.

When we were generating conceptions, myriad options were available to us in the path we had chosen (upgrading the locomotive fleet as opposed to scrapping the current fleet and buying a new one). Before the concept selection and scoring section using selection matrixes, we conducted research into different alternative fuels and engine upgrades. We had two main treatment systems to consider, pre-treatment and post-treatment, where alternative fuels and engine upgrades were considered. We ended up settling on DPF and SCR as our engine upgrade, which firmly put the NOx and PM emissions in Tier 4.

INTRODUCTION

The port of Pittsadelphia is looking for a new design for its locomotives, since the population of Pittsadelphia has been complaining about the toxic NOx emitted by the engines. In this project, we are trying to give the Pittsadelphia population a solution to the problem of NOx and PM high emissions of the locomotives.

MISSION STATEMENT

To realize the reduction of the smog, we decided to do an upgrade of the train and use better types of fuels that would reduce the locomotive emissions. By a combination of new fuels and aftertreatment methods, our new design should reduce the emissions of NOx and PM enough to meet tier 3 EPA requirements.

CUSTOMER NEEDS

After we conducted some surveys to know our customer needs, we were able to come up with specific guidelines to follow throughout our project.

Customer Need	Needs Statement
Meet EPA requirements.	Meet Tier 3 EPA emissions requirements
Reduce smog.	No more than 5.417 g/hp-hr of NOx No more than 0.1 g/hp-hr of PM
Any aftertreatment must conform to Plate L Clearance.	Aftertreatment should not exceed a width of 41.36 and a height of 29.33
Cost-effective.	The upgrade should not be expensive
Minimal work.	It should not take a lot of work to do the upgrade.
Safe for the environment.	The upgrade should be safe.

EXTERNAL RESEARCH

Overview

Alternative Fuels

- Diesel

Diesel is the most common fuel for locomotives and is comprised of hydrocarbons that are obtained through the process of distilling crude oil (DieselNet). Its high energy density and low price (relative to other fuels) are the reasons behind the locomotive industry's reliance on it(). From an environmental perspective, however; diesel lines up poorly against other fuels as it produces 5.5g / hp-hr of NOx and 0.2g/ hp-hr of PM, which makes it an environmental concern. Lastly diesel prices are projected to increase over the next few years so it may become a financial liability as well.

- Biodiesel

Biodiesel is a fuel that is manufactured from vegetable oil, animal fats and recycled restaurant grease. It is better than normal diesel as it is safer to handle, can be used in most diesel engines, is biodegradable and can be produced domestically ("Biodiesel 1). Moreover, biodiesel has a higher cetane number than diesel, which means that biodiesel burns more cleanly and completely than regular diesel ("CRIMSON 1). From an environmental perspective, there are both benefits and drawbacks as there are reduced emissions of particulate matter and increased NOx emissions. According to a study done conducted by the University of California Riverside, using biodiesel fuel increased the amount of NOx emissions when compared to normal diesel as seen by the graph below, where the darkest bar is pure biodiesel, B100 (Hajbabaei 1). Another problem with biodiesel is that is more than volatile than normal diesel, which means that it is more dangerous to transport as it requires a higher pressurized-container when compared to normal diesel (Al-Abdullah 67).

- Liquified Natural Gas

Liquified Natural Gas (or LNG as it is commonly called) is an alternative fuel that is created through purifying natural gas and then cooling this gas to approximately -260℉.The benefits of LNG is that it can be used in most diesel engines. Moreover, it has a higher cetane number than both biodiesel diesel, which means that it burns more cleanly and completely than diesel and biodiesel ("Alternative 1). LNG also releases 80% less NOx and 75% less particulate matter when compared with normal diesel. LNG is also safer than diesel and gasoline due to the higher ignition temperatures ("What 1). It is less efficient than than normal diesel as it is has a slightly lower energy density. Another problem with biodiesel is that is more than volatile than normal diesel, which means that it is more dangerous to transport as it requires a higher pressurized-container when compared to normal diesel (Al-Abdullah 67).

- Bioethanol

Bioethanol is an alternative fuel obtained through the fermentation of the sugar and starch in the by-products of plants. There are one of two ways that bioethanol can be used as a fuel source; by blending it with the pre-existing fuel or pure bioethanol. The benefits of the former is reduced NOx and PM emissions as the combustion of biological material is much cleaner. Moreover, the engine does not need to be modified in order to accommodate a bioethanol blend. The drawbacks are that the new fuel has a lower energy density and hence more of the fuel is needed. In the latter scenario, a locomotive running solely on bioethanol could meet Tier 4 requirements the easiest, however; that requires a completely new locomotive in addition to a large quantity of bioethanol (as mentioned before it has a low energy density). Lastly, the general problem with bioethanol is that the availability of the raw materials needed for its production and it can vary based on the season and the geographical location.

- Isobutanol

Butanol (and its many variants) is usually produced from propene, an organic compound typically found in crude oils. Similar to bioethanol it can be either mixed with diesel or can run on its own. Unlike bioethanol, however; butanol has many variants that are equally competent as alternative fuels. The most promising of these variants is isobutanol (C4H10O) which has an energy density has a higher energy density than coal and diesel and up to 80% of the volumetric energy density of diesel. According to Dr. M. Hosov, another benefit of isobutanol is when "compared to diesel fuel, CO and NOx emissions decrease", however; he notes that "HC emissions increase considerably" (Hosov 1). The current price of isobutanol is currently quite higher than that of diesel, however; it is projected that the price of isobutanol will decrease dramatically over the next few years, whilst the price of diesel is projected to rise.

Locomotive Upgrades

- Exhaust Gas Recirculation (EGR)

This method of NOx reduction works by taking the exhaust gas produced by the combustion process and recirculating that gas back into the engine's intake with more fuel to keep the temperature below the NOx producing threshold. EGR also boosts the compression ratio because the unused fuel is reused, essentially substituting oxygen in the combustion chamber for fuel. This is a very effective method of reducing NOx emissions but not as good for PM emissions. EGR actually causes a boost in the amount of particulate matter produced, meaning it cannot be used alone to meet the requirements. In addition, this method requires the addition of a whole new system in an engine which consists of the exhaust cooler, EGR valve, and the control unit to control the system. Perhaps the biggest downside to utilizing EGR is that maximum power is reduced as a consequence of the lower amount of oxygen. Some systems will shut off EGR when requiring a lot of power, but this obviously isn't ideal for emissions. EGR definitely has some substantial benefits if coupled with other methods.

- High Pressure Common Rail (HPCR)

HPCR is an alternative method of fuel injection into the compression chamber. Rather than all of the fuel coming directly from one intake valve (direct injection), the fuel is injected via several smaller intake valves spaced more evenly around the compression chamber. This allows for much more even fuel mixing and a higher compression ratio, helping to reduce NOx and PM emissions. This system is very intricate and can prove difficult and expensive to optimize. However, when utilized correctly HPCR can greatly decrease both kinds of emissions.

- Selective Catalytic Reduction (SCR)

Selective catalytic reduction is a system that takes the exhaust from a combustion engine and reacts the NOx emissions with ammonia to break it down into N2, H2O, and a very very small amount of CO2. SCR boasts up to 90% NOx reduction, in addition to a 30-50% reduction in PM emission. This method also comes with the addition of a whole system, but it can be added to the tailpipe much easier without having to massively redesign the engine and the system is also very simple. Therefore, although there is a cost associated with this method, it's one of the higher systems in terms of cost-efficiency in reducing emissions.

- Diesel Particulate Filter (DPF)

DPF is a system that usually replaces the muffler and is used to reduce the emission of particulate matter. It works by collecting the PM on the walls of the DPF (after the PM leaves the engine) and proceeds to oxidize it. In most engines, the heat output is enough to support passive self-regeneration, whilst in some rare scenarios heat has to be influxed into the system. This, however; should not be a hinderance for a locomotive since it produces enough heat. The

resultant reduction in PM is over 90%, which puts the locomotive in Tier 4 (from the PM perspective). One problem, however; is that the DPF has no effect on NOx as it was not created the address it. On the other hand, combining DPF with other upgrades is an option.

New Fleet

- Tier 3 Train

GE transportation Evolution Series Tier 3 locomotives meet the most stringent emissions standard including U.S. EPA Tier 3 and EU IIIa. A tier 3 locomotive, powered by 12-cylinder diesel engine, with 4-stroke and a turbocharged engine, produces 4,400 HP. The tier 3 locomotive is the result of a 10-year, $400 million investment by GE transportation.

- Tier 4 Train

GE's Evolution Series Tier 4 Locomotives meet the U.S. Environmental Protection Agency's (EPA) stringent Tier 4 emission standards. The Tier 4 locomotives decrease emissions by more than 70 percent from Tier 3 technology and save more than $1.5 billion in urea infrastructure and operational costs.

Benchmarking

Train	Fuel	Tier	Engine Features	Aftertreatment	Cylinders	Compression Ratio	Horsepower	Range
NextFuel Natural Gas Retrofit Kit	Diesel / Natural Gas	N/A	N/A	N/A	N/A	Turbocharged	4,400	500 miles/ton-gal
Evolution Series Tier 4 locomotive	Diesel	4	EGR + HPCR	No	12	Two Stage turbocharger	4,400	500 miles/ton-gal
Evolution Series Tier 3 locomotive	Diesel	3	N/A	No	12	Turbocharged	4,500	550 miles/ton-gal
F125	Diesel - Electric	4	N/A	No	20	Turbocharged	4,700	550 miles/ton-gal
Siemens Charger	Diesel - Electric	4	N/A	N/A	16	Turbocharged	4400	500 miles/ton-gal
EMD SD70ACe-T4 locomotive	Diesel	4	N/A	No	12	Turbocharged	4,200	550 miles/ton-gal
QSG12 Engine	Diesel	4	N/A	N/A		Wastegated Turbocharger	4400	480 miles/ton-gal
EMD F125 low-emission locomotive	Natural Gas	4	four-stroke Caterpillar C175 engine	No	20	Turbocharged	4,200	500 miles/ton-gal

*Sources in the appendix

CONCEPT GENERATION

	Metric	Alternative Fuel	Locomotive Upgrade	Aftertreatment	New Fleet
Needs					
Reduce NOx (g/ hp-hr)		X	x	x	X
Reduce PM (g/ hp-hr)		X	x	x	X
Minimize cost ($)					
Few additional fueling stations					X
Maintain safety			X	X	X
Few engine modifications		x		X	

CONCEPT SELECTION

Alternative Fuels

	Fuel				
Selection Criteria	Bioethanol	Isobutanol	Diesel (Reference)	LNG	Biodiesel
NOx	+	+	0	+	-
PM	+	-	0	+	+
Cost per gallon	-	-	0	+	-
Fueling Stations Needed	-	+	0	-	-
Safety	-	+	0	+	-
Engine Modifications	-	-	0	0	0
Sums of +'s	2	3	0	4	1
Sums of -'s	4	3	0	1	4
Net Score	-2	0	0	3	-3
Rank	4	2	2	1	5
Continue?	No	Yes	Yes	Yes	No

		Alternative Fuels		
Selection Criteria	Weight	Isobutanol	Diesel	LNG
NOx	10	3	2	4
PM	30	1	2	4
Cost per gallon	15	2	3	4
Fueling Stations needed	20	4	4	2
Safety	10	4	3	3
Engine Modifications	15	1	5	2
Total Score (Out of 5)		2.25	3.1	3.2
Develop?		No	No	Yes

Locomotive Upgrades

	Locomotive Upgrades				
Selection Criteria	EGR	HPCR	No Upgrade	SCR	DPF
NOx	+	+	0	+	0
PM	+	+	0	+	+
Cost	-	-	0	-	-
Minimal work to upgrade	-	-	0	-	+
Sums of +'s	2	2	0	2	2
Sums of -'s	2	2	0	2	1
Net Score	0	0	0	0	1
Rank	2	2	2	2	1
Continue?	Combine w/ DPF	Yes	No	Combine w/ DPF	Combine w/ EGR and SCR

		Locomotive Upgrades			
Selection Criteria	Weight	HPCR	No Upgrade	DPF + SCR	DPF + EGR
Less than 5.417 g/hp-hr of NOx	15%	3	1	4	3
Less than 0.1 g/hp-hr of PM	35%	3	2	5	5
Cost	25%	2	4	3	3
Minimal work to upgrade	25%	2	5	4	4
Total Score (Out of 5)		2.5	3.1	4.1	3.95
Develop?		No	No	Yes	No

New Fleet

	New Fleet	
Selection Criteria	Tier 3 (Reference)	Tier 4
NOx	0	+
PM	0	+
Cost	0	-
Sums of +'s	0	2
Sums of -'s	0	1
Net Score	0	1
Rank	2	1
Continue?	Yes	Yes

		Fleet Type	
Selection Criteria	Weight	Tier 3	Tier 4
NOx	25%	3	4
PM	35%	3	4
Cost	40%	4	3
Total Score (Out of 5)		3.4	3.6
Develop?		No	Yes

Final Selection

	Final Selection		
Selection Criteria	LNG	Tier 4 Train (Reference)	DPF + SCR
NOx	-	0	+
PM	-	0	+
Cost	+	0	+
Sums of +'s	1	0	3
Sums of -'s	2	0	0
Net Score	-1	0	3
Rank	3	2	1
Continue?	No	Yes	Yes

		Final Selection	
Selection Criteria	Weight	Tier 4 Train	DPF + SCR
NOx	25%	3	4
PM	35%	3	4
Cost	40%	2	4
Total Score (Out of 5)		2.6	4
Develop?		No	Yes

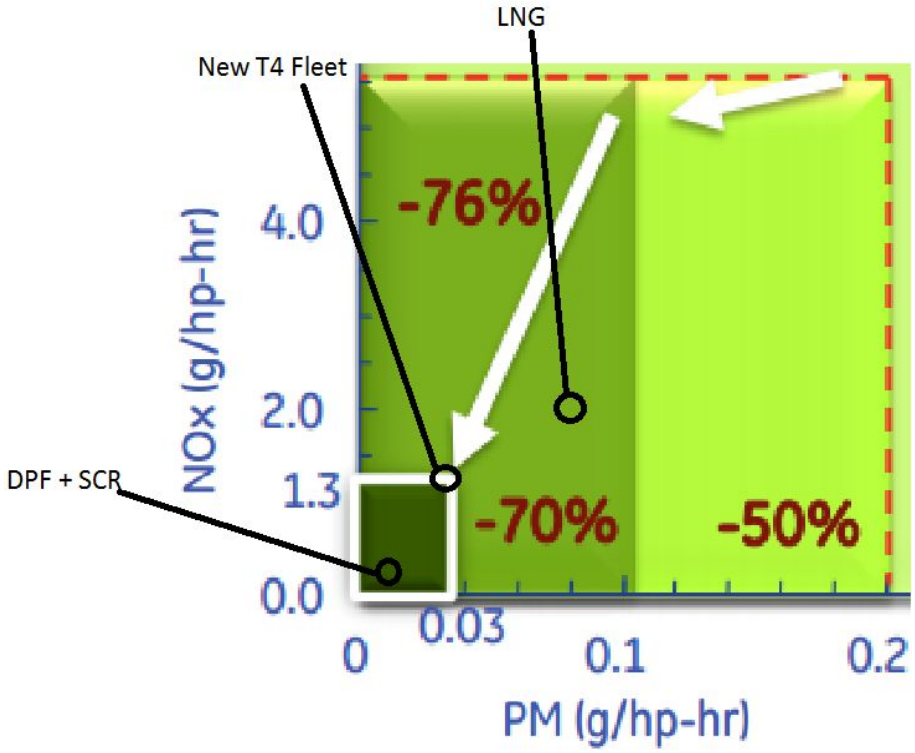

DESIGN

After deciding on a concept, there was still a lot of work to be done to visualize our solution. We needed to construct both a virtual Solidworks model and a physical model. Below are several views of both of those models.

There were many restrictions placed upon the design of our system. The most concrete of these restrictions was the set dimensions that our aftertreatments could not exceed. Since the locomotive has to travel through tunnels and such, anything that would attach to the muffler couldn't exceed the length, height, and width set forward by General Electric and referenced earlier in this report. These dimensions are denoted in the Solidworks model by the glass "box". Since in the front, side, and top views it is plain to see that our system does not protrude from the specified volume, we know that restriction is met.

Both models demonstrate a system that attaches to the existing muffler. The general principle of the system is that the emissions from the engine travel through the Diesel Particulate Filter (DPF) first to reduce PM, before being injected with ammonia gas (NH3) which reacts with the NOx in the emissions when introduced to the catalyst in the Selective Catalytic Reduction (SCR). Then, the cleaner exhaust is released into the air through the upward pointing pipe. The combined efforts of these systems will help to greatly reduce both the particulate matter and nitrous oxides released into the air, landing the train solidly in Tier 4. In order to do so, we had to fit chambers for both the filter and catalyst in addition to a tank to hold the ammonia gas.

The filter and catalyst were rather easy to design by referencing other designs that incorporated similar features. The tank of ammonia was chosen to maximize the amount of ammonia that can be stored between refilling.

We took into account many factors in order to formulate our design for the combination of DPF and SCR systems.

Design

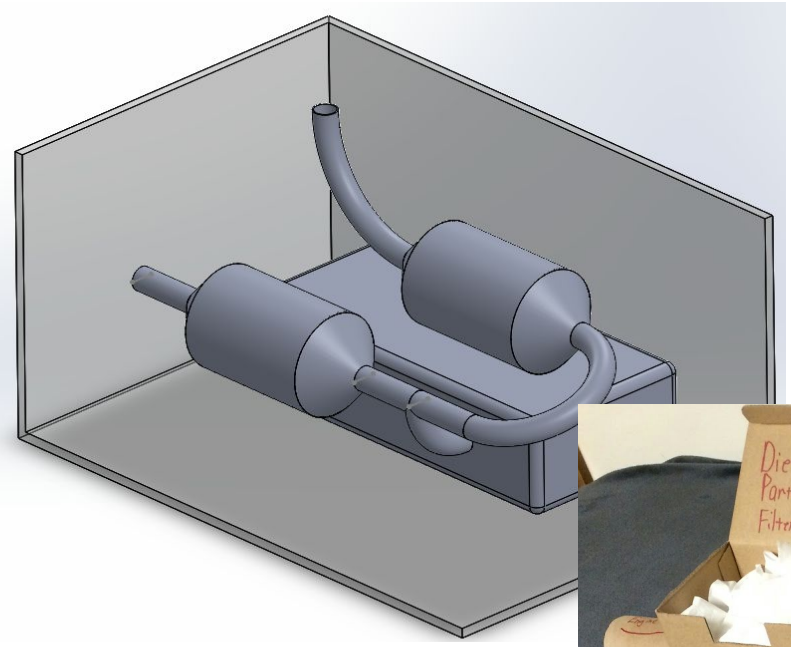

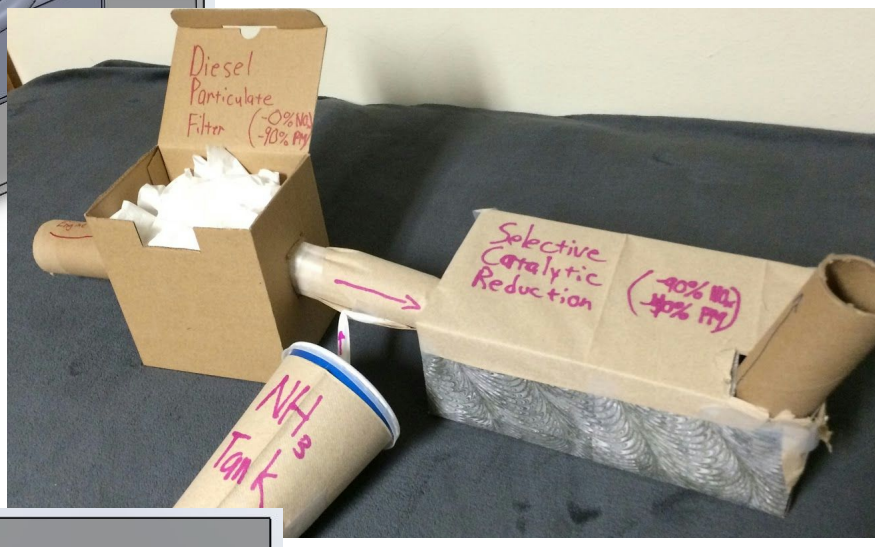
Diesel
Particulate
Filter
Selective
Catalytic
Reduction
NH3
Tank

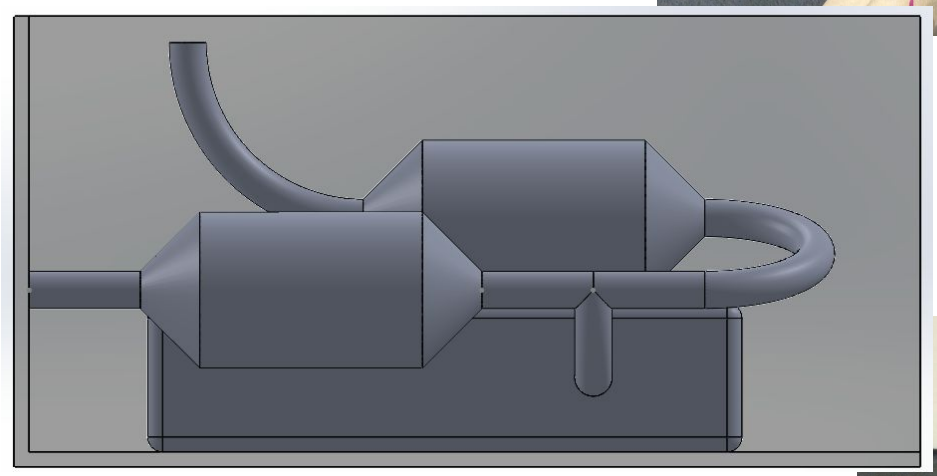

Diesel
Particulate
Filter
Selective
Catalytic
Reduction
NH3
Tank

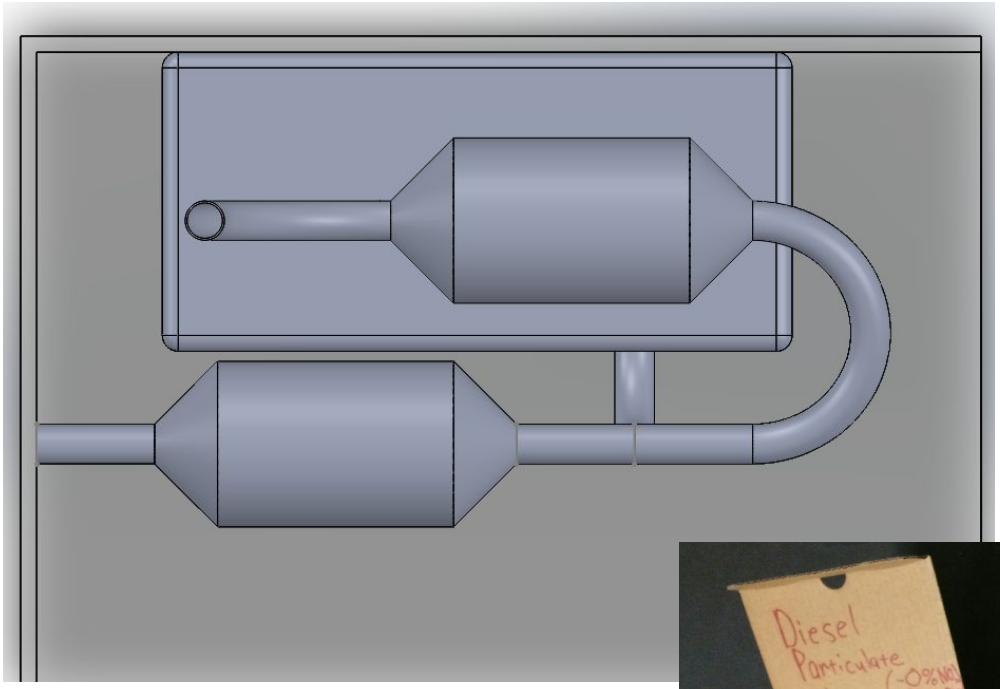

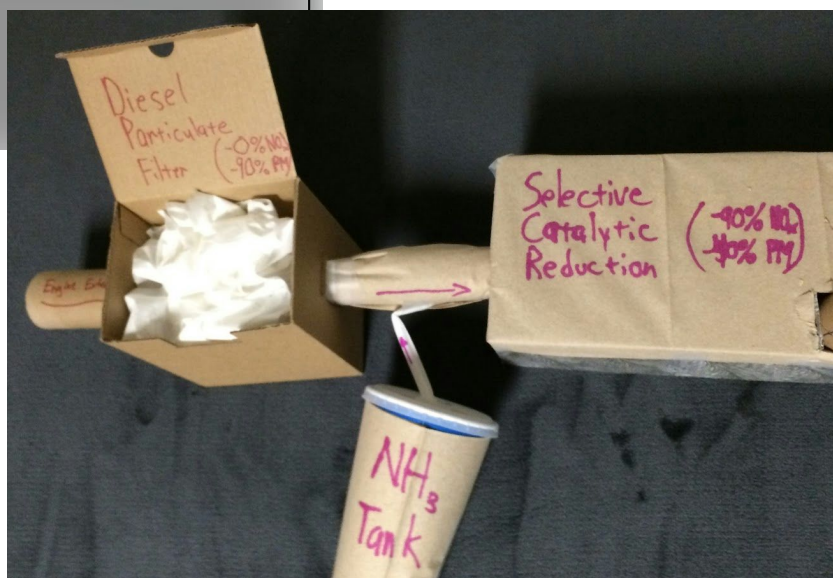
Diesel
Particulate
Filter
Selective
Catalytic
Reduction
NH3
Tank

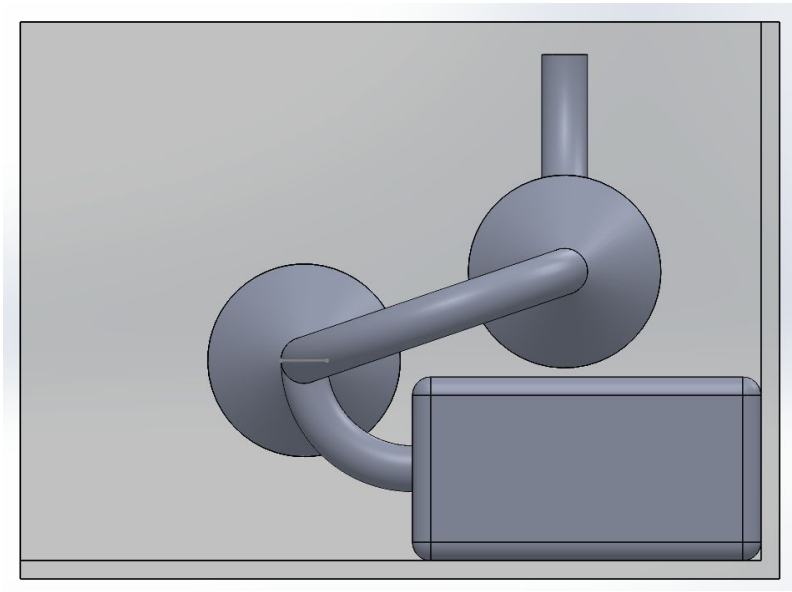

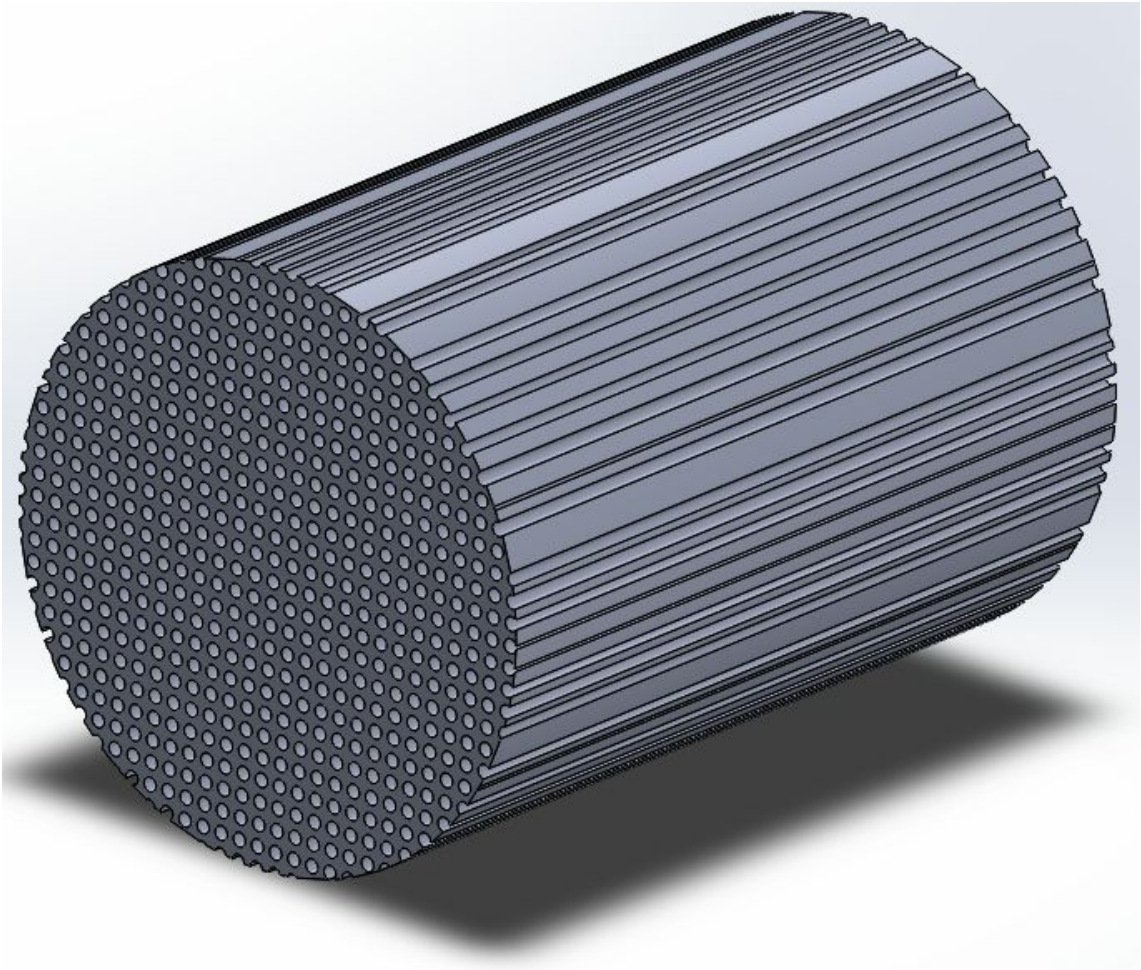

*the filter itself

COST MODEL

B	C	D	E	F	G	H	I	J
Alternative Fuel (LNG)			Aftertreatment (DPF + SCR)			New Fleet		
Locomotive Upgrade	$1 million	50 needed	DPF	$100,000	50 needed			

We developed a cost model to help determine which of our possible solutions would be the most cost effective. As you can see, by far the most cost effective option was the DPF and SCR aftertreatment systems, costing ten million dollars.

CONCLUSION

Throughout this project we used the engineering process to successfully design and model a locomotive upgrade system to meet tier four standards. Each step in the process was decided by the corresponding step in the engineering process.Through the creation of this solution and the accompanying work, the team learned valuable skills covering group interaction, the engineering process, and working with limitations. We were able to create a design that satisfied our customer's needs, and met the requirements to be considered a tier four locomotive while dealing with limiting factors.

Works Cited

Al-Abdullah, M. H., G.T. Kalghatgi, and H. Babiker. "Flash Points and Volatility Characteristics of Gasoline/diesel Blends." ScienceDirect, 18 Feb. 2015. Web. 16 Nov. 2015. <http://www.sciencedirect.com/science/article/pii/S0016236115002239>.

"Biodiesel." *Biodiesel*. US Department of Energy, n.d. Web. 16 Nov. 2015. <https://www.fueleconomy.gov/feg/biodiesel.shtml>.

"CRIMSON Renewable Energy." *CRIMSON Renewable Energy*. N.p., n.d. Web. 16 Nov. 2015. <http://www.crimsonrenewable.com/specs.php>.

Hajbabaei, Maryam, Kent C. Johnson, Robert A. Okamoto, Alexander Mitchell, Marcie Pullman, and Thomas Durbin. "Evaluation of the Impacts of Biodiesel and Second Generation Biofuels on NOx Emissions for CARB Diesel Fuels." Environmental Science & Technology (ACS Publications), 12 July 2012. Web. 16 Nov. 2015. <http://pubs.acs.org/doi/abs/10.1021/es300739r>.

"Alternative Fuels - Properties." Alternative Fuels - Properties. N.p., n.d. Web. 13 Dec. 2015.

"Cummins Particulate FilterMeeting Low Emissions With The Right Technology." Cummins Engines. N.p., n.d. Web. 13 Dec. 2015.

Exhaust Emissions with Ethanol or N-butanol Diesel Fuel Blends during Transient Operation: A Review (n.d.): n. pag. Web.

"Performance and Emission Characteristics of a Diesel Engine Using Isobutanol–diesel Fuel Blends." ResearchGate. N.p., n.d. Web. 13 Dec. 2015.

"What Is Bioethanol Fuel? Green Energy, Denatured Alcohol, & More." What Is

Bioethanol Fuel? Green Energy, Denatured Alcohol, & More. N.p., n.d. Web. 13 Dec. 2015.

"Why BioFuel Energy Corp Investors Are So Excited About Isobutanol." Seeking Alpha. N.p., n.d. Web. 13 Dec. 2015.