Math 141
Exam 1
February 9, 2016
#1-8:12 pts each, #9: 4 pts.

name Denise Shaking
*no calculators
*show all relevant work to receive full credit
*any evidence of academic dishonesty = 0 grade
*only pencils, pens = - 5 from grade
*late for exam= - 5 from grade

1. ***SET UP*** the integral(s) to find the area of the region bounded by the graphs of $x = y^2 - 1$ and $x = y + 1$

limits:

$y^2 - 1 = y + 1$

$y^2 - y - 2 = 0$

$(y-2)(y+1) = 0$

$y = 2, -1$

$$A = \int_{-1}^{2} [(y+1) - (y^2 - 1)]\, dy$$

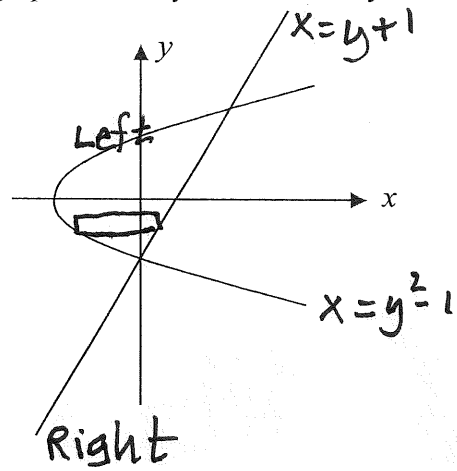

2. ***SET UP*** the integral(s) to find the volume of the solid generated by rotating the region bounded by the graphs of $y = \sqrt{x}$, $x = 0$ and $y = 2$ about the y-axis using **horizontal rectangles**. Δy

DISK

$$V = \pi \int_{0}^{2} (y^2)^2\, dy$$

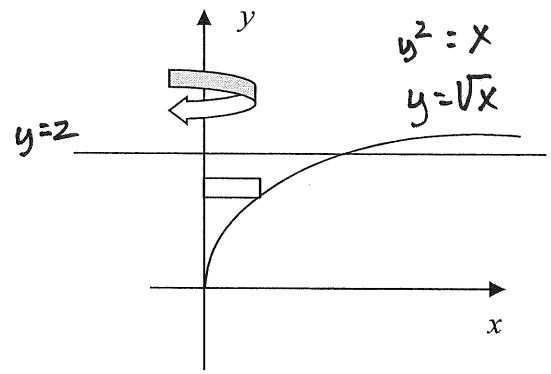

Math 141
Exam 1
February 9, 2016
#1-8:12 pts each, #9: 4 pts.

name Denise Shaking

*no calculators
*show all relevant work to receive full credit
*any evidence of academic dishonesty = 0 grade
*only pencils, pens = - 5 from grade
*late for exam= - 5 from grade

1. ***SET UP*** the integral(s) to find the area of the region bounded by the graphs of $x = y^2 - 4$ and $x = 2y + 4$

limits:

$y^2 - 4 = 2y + 4$

$y^2 - 2y - 8 = 0$

$(y-4)(y+2) = 0$

$y = 4, -2$

$$A = \int_{-2}^{4} [(2y+4) - (y^2 - 4)]\, dy$$

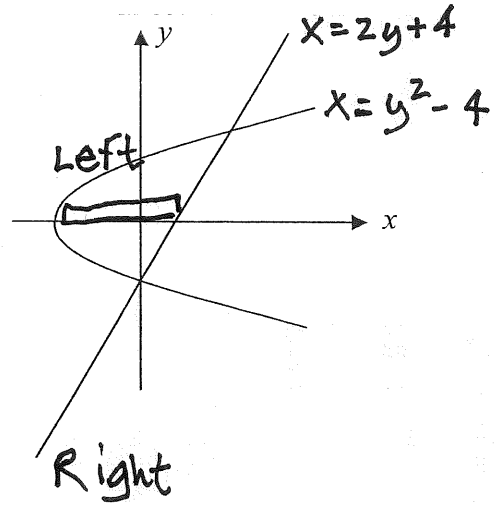

2. ***SET UP*** the integral(s) to find the volume of the solid generated by rotating the region bounded by the graphs of $y = \sqrt{x}$, $x = 0$ and $y = 2$ about the y-axis using **horizontal rectangles**. Δy

DISK

$$V = \pi \int_{0}^{2} (y^2)^2\, dy$$

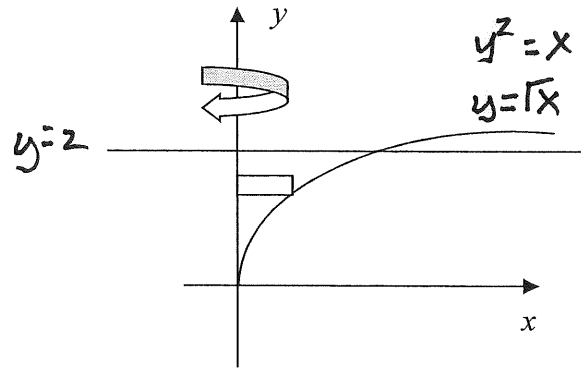

3. ***SET UP*** the integral(s) to find the volume of the solid generated by rotating the region bounded by the graphs of $y = 2 - x^2$ and $y = x^2$ about the line $y = 2$ using **vertical rectangles**. Δx

WASHER

$R(x) = 2 - x^2$

$r(x) = 2 - (2 - x^2) = 2 - 2 + x^2 = x^2$ *

limits; $2 - x^2 = x^2$

$2 = 2x^2$

$\pm 1 = x$

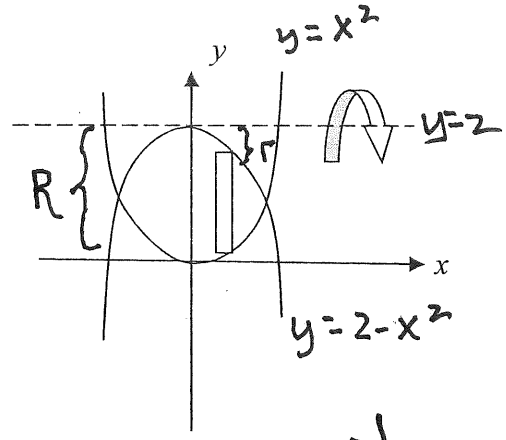

★

$$V = \pi \int_{-1}^{1} \left[(2 - x^2)^2 - [2 - (2 - x^2)]^2 \right] dx$$

or use $2\pi \int_0^1 R^2 - r^2 \, dx$

symmetry

4. ***SET UP*** the integral(s) to find the volume of the solid with square cross-sections taken perpendicular to the x-axis whose base is bounded by the graphs of $y = x^2 - x$ and $y = x$.

$$V = \int_a^b A(x)\,dx$$

side $= x - (x^2 - x)$

$A = [x - (x^2 - x)]^2$

limits:

$x^2 - x = x$

$x^2 - 2x = 0$

$x(x - 2) = 0$

$x = 0, 2$

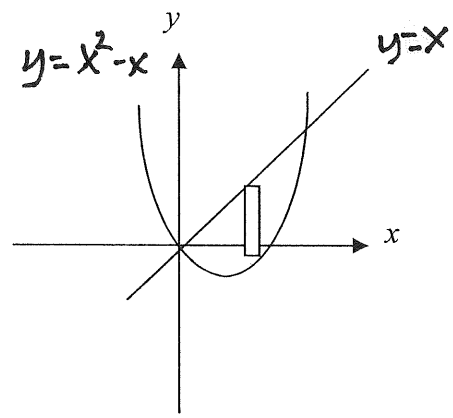

$$V = \int_0^2 [x - (x^2 - x)]^2 \, dx$$

5. ***SET UP*** the integral to find the ***area*** of the surface formed by rotating the graph of the curve $f(x) = x^2$ over $[0,2]$ about the x-axis.

$$S = 2\pi \int_a^b r(x)\sqrt{1+[f'(x)]^2}\,dx$$

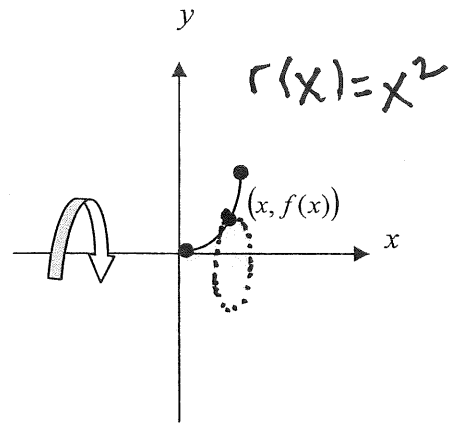

$f'(x) = 2x$

$f'(x) = (2x)^2 = 4x^2$

$$S = 2\pi \int_0^2 x^2\sqrt{1+4x^2}\,dx$$

6. Find the indefinite integral: $\int x \ln x\, dx$ $\qquad \int u\,dv = uv - \int v\,du$

$u = \ln x \qquad dv = x\,dx$

$du = \frac{1}{x}dx \qquad v = \int x\,dx = \frac{1}{2}x^2$

$$\int x\ln x\,dx = \frac{1}{2}x^2\ln x - \int \frac{1}{2}x^2\left(\frac{1}{x}\right)dx$$

$$= \frac{1}{2}x^2\ln x - \int \frac{1}{2}x\,dx$$

$$= \frac{1}{2}x^2\ln x - \frac{1}{4}x^2 + C$$

7. **FIND**, (don't just set it up), the volume of the solid, if the region bounded by the graphs of

$y = e^{2x}$, $x = 0$, $y = 0$, and $x = 1$ is rotated about the y-axis.

Name/indicate the method of your choice: shell

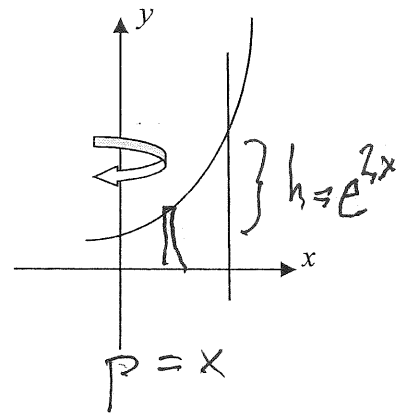

$$V = 2\pi \int_0^1 x e^{2x}\, dx$$

$$= \int x e^{2x}\, dx$$

$u = x \quad dv = e^{2x}\, dx$

$du = dx \quad v = \frac{1}{2} e^{2x}$

$$\int x e^{2x}\, dx = \frac{1}{2} x e^{2x} - \int \frac{1}{2} e^{2x}\, dx$$

$$= 2\pi \left[\frac{1}{2} x e^{2x} - \frac{1}{4} e^{2x} \right]_0^1 = 2\pi \left[\left(\frac{1}{2} e^2 - \frac{1}{4} e^2 \right) - \left(0 - \frac{1}{4} \right) \right]$$

$$= 2\pi \left(\frac{1}{4} e^2 + \frac{1}{4} \right) \text{ units}^3$$

8. Find the indefinite integral. $\int \sin^9 x \cdot \cos^3 x\, dx$

$$\int \sin^9 x \cos^2 x \cos x\, dx$$

$$\int \sin^9 x (1 - \sin^2 x) \cos x\, dx$$

$$\int (\sin^9 x - \sin^{11} x) \cos x\, dx = \frac{1}{10} \sin^{10} x - \frac{1}{12} \sin^{12} x + C$$

$u = \sin x \quad du = \cos x\, dx$

9. 4 points: Any plans for Valentine's Day? Answer Varies