Math 141 **name**_____
Exam 1 *no calculators
February 9, 2016 *show all relevant work to receive full credit
#1-8:12 pts each, #9: 4 pts. *any evidence of academic dishonesty = 0 grade
*only pencils, pens = - 5 from grade
*late for exam= - 5 from grade

1. ***SET UP*** the integral(s) to find the area of the region bounded by the graphs of $x = y^2 - 4$ and $x = 2y + 4$
.

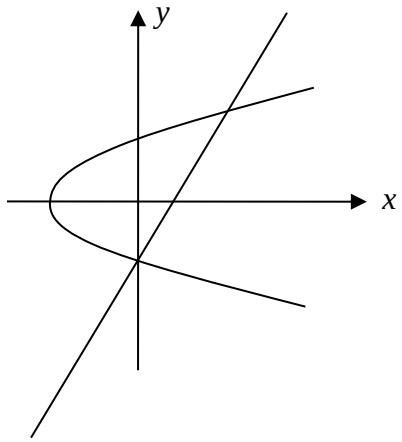

2. ***SET UP*** the integral(s) to find the volume of the solid generated by rotating the region bounded by the graphs of $y = \sqrt{x}$, $x = 0$ and $y = 2$ about the *y*-axis using **horizontal rectangles**.

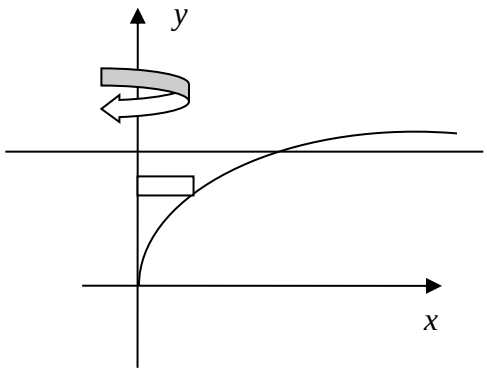

3. ***SET UP*** the integral(s) to find the volume of the solid generated by rotating the region bounded by the graphs of $y = 2 - x^2$ and $y = x^2$ about the line $y = 2$ using **vertical rectangles**.

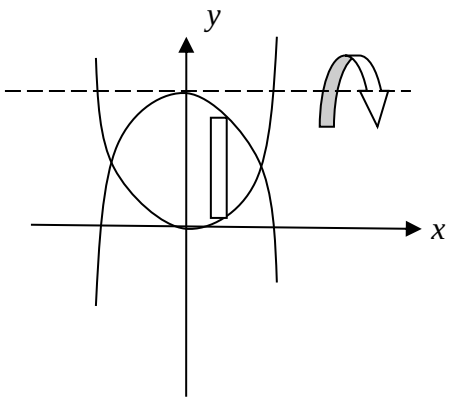

4. ***SET UP*** the integral(s) to find the volume of the solid with square cross-sections taken perpendicular to the *x*-axis whose base is bounded by the graphs of $y = x^2 - x$ and $y = x$.

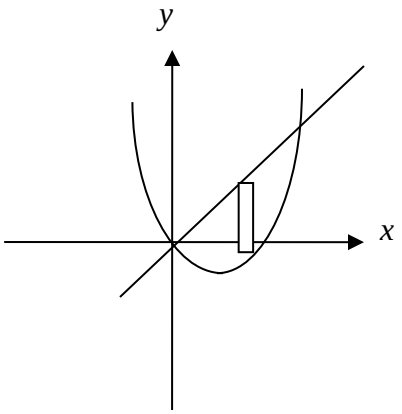

5. ***SET UP*** the integral to find the ***area*** of the surface formed by rotating the graph of the curve $f(x) = x^2$ over $[0, 2]$ about the x-axis.

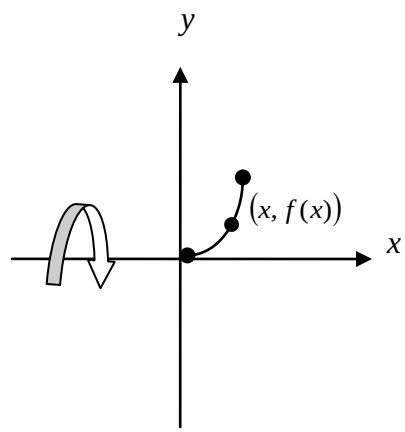

6. Find the indefinite integral: $\int x \ln x \, dx$

7. **FIND** , (don't just set it up), the volume of the solid, if the region bounded by the graphs of

$y = e^{2x}$, $x = 0$, $y = 0$, and $x = 1$ is rotated about the *y*-axis .

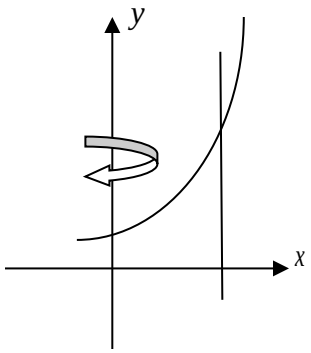

Name/indicate the method of your choice**:** _____

8. Find the indefinite integral. $\int \sin^9 x \cdot \cos^3 x \, dx$

9. 4 points: Any plans for Valentine's Day? _____