DELPHI

The Piezoelectric Shock Absorber

EDSGN 100

12/15/14

Carl Santoleri

Matthew Poska

Emily Schwarz

Matthew Bunker

Executive Summary

After initial concept generation and selection, the team chose a design for a piezoelectric shock absorber that would partially fuel the car by deriving energy from the motion caused by the impact between the wheels and the road. The team focused on a design that would minimize the weight and size of the shock absorber, while still maximizing the amount of energy it can gain from impact. The team started by identifying the customer needs that the product must address, which is included later in this report. Using this context, the team determined important features that must be included in the shock absorber design. such as compatibility with the other systems present in modern cars, ease of repair, and functionality. With all this information, an initial design for the shock absorber was created that would allow implementation of the key design features and satisfy the customer needs. With further development, the piezoelectric shock absorber could be an additional energy source that can increase the car's fuel efficiency while using road-induced shock absorber motion.

Introduction

The purpose of the Delphi project is to develop a design for a fully-functioning piezoelectric shock absorber that will serve as an additional energy source for electric and hybrid cars. Just like a traditional shock absorber, the piezoelectric shock absorber will absorb energy from bumps in the road, which will allow for a smoother ride. However, the model the team is creating will also be able to convert this kinetic energy into electricity, which is effectively extra fuel for the car. The shock absorber will provide an incremental increase to the fuel efficiency of a car, and long-term usage would lead to significant economic and environmental benefits. The main focus of this design effort is to improve the amount of fuel that traditional cars can gain

from more environmentally-friendly and renewable resources. The importance of the development of cleaner fuel sources is highlighted by the *Green* Delphi mega-trend. Delphi is promoting the creation of alternative fuel sources that will be more protective of the environment, and the team is creating the shock absorber with this goal in mind.

Research

Since 2011, Professor Lei Zuo and a pair of graduate students from the State University of New York have been developing a shock absorber that can be installed into the suspension system of a car to convert energy from road bumps into electricity. According to an article released by Stony Brook University (Source #1), this new shock absorber has the potential to increase fuel efficiency by 2 - 8% in hybrid vehicles and 1 - 4% in traditional vehicles. When a car is in motion, the bumps and vibrations of the road cause tubes inside the shock absorber to compress and expand. This motion can produce an electric voltage. Depending on the conditions of the road, a piezoelectric shock absorber can produce from 100 to 1600 watts, which can be used to charge the battery of the car. In common shock absorbers, the energy created by the motion of the shock absorber is wasted in the form of heat instead of being converted into usable energy. Another major benefit of these shock absorbers is that they can be designed to be compatible with today's vehicles by replacing traditional shock absorbers with the energy-producing model. The cost of the energy-producing shock absorber is higher than the cost of traditional shock absorbers, but it will likely take under 4 years after installation for the money saved by the extra energy to be greater than the initial price.

Calculations

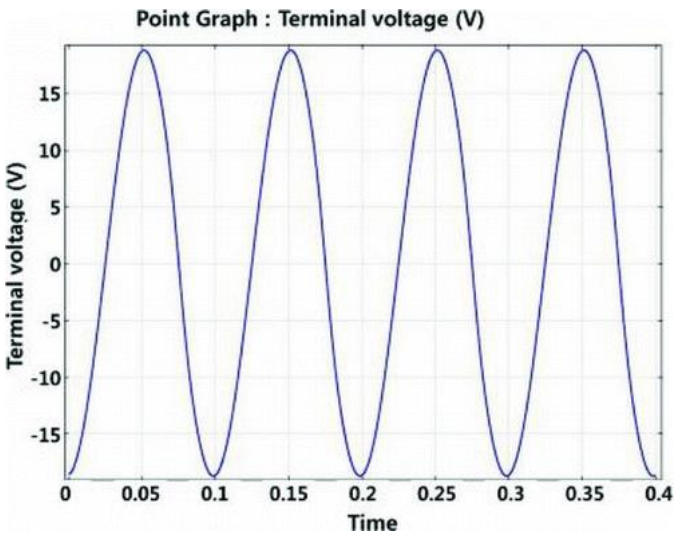

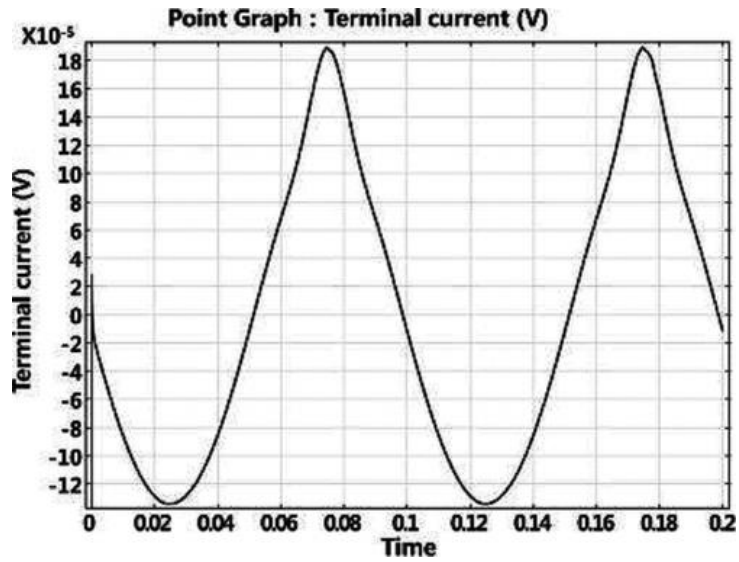

Figure 1: Voltage over time graph

Figure 2: Current over time graph

The information in figure 1 and 2 display the voltage and current of a 40mm piezoelectric transducer. With this given information we know that Power= Current X Voltage, or P=IV. If we take the peak values from that graphs:

P=IV

P= 19 Amps X 20 Volts

P= 380 Watts

Calculations are based on the information given from *Design of a Piezoelectric Energy-Harvesting Shock Absorber System for a Vehicle*, Hongseok Lee and Hongseok Jang.

Customer Needs

In order to identify customer needs, the team took into consideration three overarching trends: safe, green, and connected. The vehicle did not need to meet all three of these goals, but in fulfilling any one of them, it could not detract from either of the other requirements. The team generated three concepts, and produced the following customer needs in Table 1.

Customer Need	Metrics
Take full advantage of available technology	Piezoelectrics would work with the regenerative braking system already found in hybrid cars
Failure of the product would not jeopardize the safety of the consumer	If the piezoelectrics failed, the system would still function as a normal shock absorber
Car should not cause unnecessary harm to the environment	Shock absorbers take energy created from impact and use it to charge the battery of the car.
Save consumer money	Will save about 1-8% on fuel costs with new technology installed

Table 1: Customer needs and how our design meets them

Concept Generation

Keeping in mind the three megatrends provided by Delphi, the team generated three unique concept designs early in the project. The first, solar panels installed on the roof of the car, would allow for a new way to charge the car's battery and power hybrid and electric vehicles. The second, police access to navigation and speed control systems, would greatly benefit the user's safety. Not only would it allow law enforcement officers to slow down cars who they observe speeding, as well as track vehicles in certain situations. The third and final idea, the piezoelectric shock absorber, would provide a way to reclaim some of the energy lost while the vehicle is in use. The piezoelectrics would generate electrical energy from impact on the shock absorbers, and use that energy to charge the battery of the car.

Concept Selection

In order to select the final design concept, the team surveyed a variety of individuals, with a focus on those from 18-20 years old, as those individuals would be most likely to purchase a new vehicle when the final design concept was ready for release to the public. Of the people surveyed, a vast majority of those surveyed placed great importance on the fuel efficiency and low environmental impact of motor vehicles. Most of those surveyed were extremely uncomfortable with the idea of the authorities having limited control of their car, and when asked to choose between the three design concepts generated by the team, only two of the eighty-seven individuals surveyed chose this option.

There was a fairly even divide between those who chose piezoelectric shock absorbers and those who selected solar panel roofs when asked to select one of the three final design concepts, with a slight majority choosing the piezoelectric shock absorber technology. The team decided on the shock absorber as the final design concept based on the consumer survey, as well as the ease with which it could be implemented into hybrid cars, and the very small impact it would have on the weight of the car. Solar panels, which can add anywhere from 3-8 pounds per square foot, would contribute a greater amount to the final weight of the car, which would impact gains in fuel efficiency, invalidating any energy generated using the solar panels.

The team also used the AHP Design Matrix (Table 2) to weight the different features of the designs in order of importance, and incorporated this into a design selection matrix (Table 3) to aid in selection of the final design. In each area, the team scored the individual design concepts on a scale of 1-5, and using the weighted scores generated by the matrix, came to a final decision as to which design concept with which to move forward.

Table 2: AHP Design Matrix

Team 4 AHD											
	lightweight	maintain original function	affordability	recycled materials	compact	compatability	ease of repair	manufacturablity	performance	total	weight
lightweight	1	1	2	4	2	1.5	1	1	0.5	14	0.129
maintain original function	1	1	3	4	2	2	1	1	1	16	0.148
affordability	0.5	0.33	1	2	0.5	2	0.5	0.33	0.33	7.49	0.069
recycled materials	0.25	0.25	0.5	1	0.33	0.5	0.25	0.25	0.25	3.58	0.033
compact	0.5	0.5	2	3	1	2	0.5	0.5	0.75	10.75	0.099
compatability	0.66	0.5	0.5	2	0.5	1	0.5	0.33	0.5	6.49	0.060
ease of repair	1	1	2	4	2	2	1	0.5	0.5	14	0.129
manufacturablity	1	1	3	4	2	3	2	1	0.5	17.5	0.162
performance	2	1	3	4	1.33	2	2	2	1	18.33	0.170
										108.14	1.000

	weight	piezoelectric shock absorber	solar panel roof	police control of car
lightweight	0.129	5	5	1
maintain original function	0.148	5	1	1
affordability	0.069	3	1	3
recycled materials	0.033	1	3	1
compact	0.099	5	4	3
compatibility	0.06	5	4	5
ease of repair	0.129	3	2	5
manufacturability	0.162	5	5	5
performance	0.17	5	5	5
TOTAL		4.467	3.515	3.419

Table 3: Design Selection Matrix

Final Description

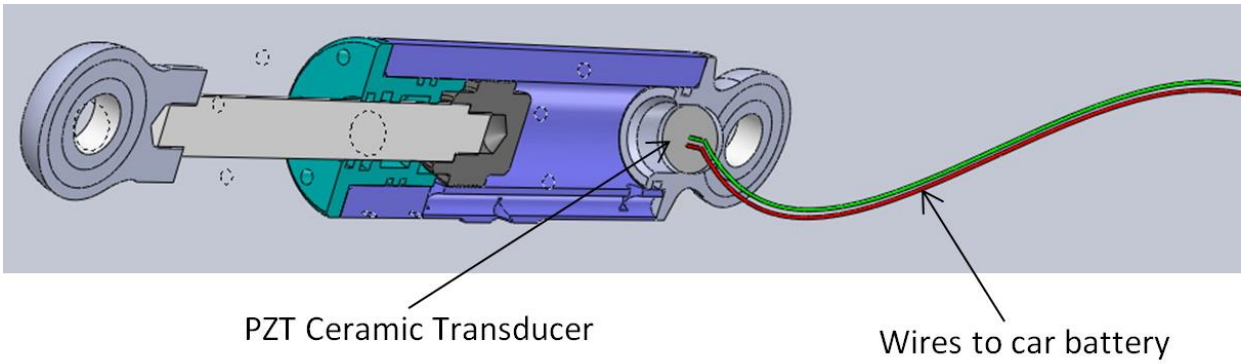

Figure 3: Shock absorber with PZT disc inserted

The final concept selection is a retrofit of existing shock absorber designs, by inserting the piezoelectric material. This method is a more feasible option rather than a total redesign and remodel of the shock absorber. Piezoelectric discs will be placed within the absorber to capture the compression energy from the shock absorber's motion. The plan is to use Lead zirconate titanate, or PZT ceramic materials. These are the most common types of piezoelectric materials. The generated energy will travel through wires to charge the battery of the car. Choosing to do a retrofit proved to be the best fit for our customer needs, while also being the simplest way to go about creating a good product.

System Diagrams

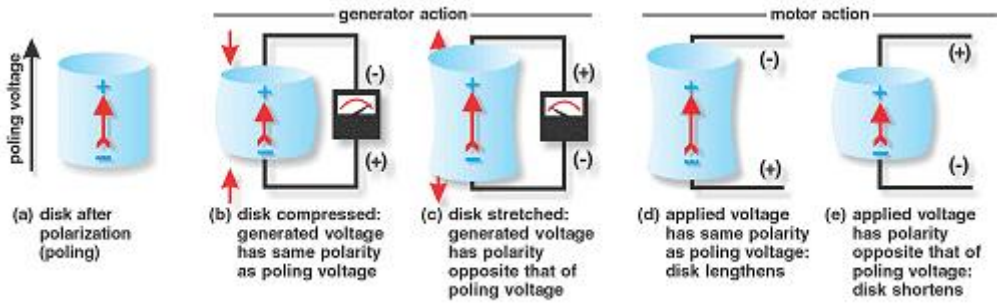

Figure 4: Schematic of piezoelectric disc

Figure 4 displays the basic principles of how piezoelectric materials function. Under compression these materials become polarized and generate energy. Additionally, if voltage is applied to the disc, it will compress or expand accordingly. However, this function of the disc will not be used inside the shock absorber.

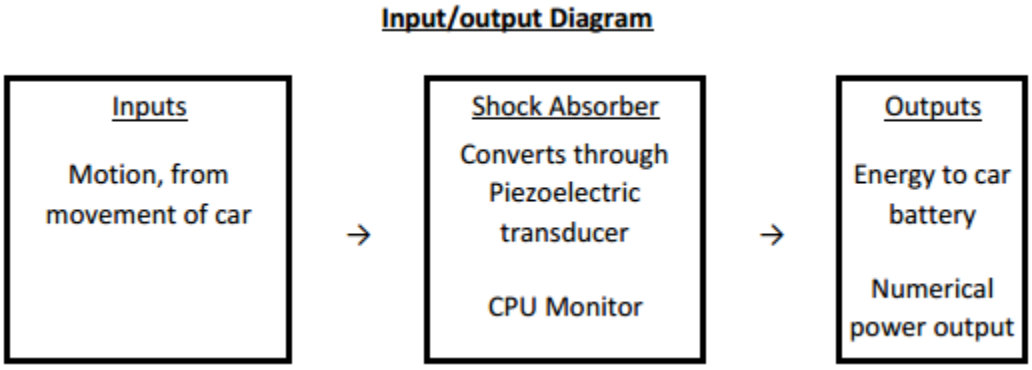

Figure 5: Simple input and output chart for the shock absorber

The inputs in figure 5 are rather simple, with the only one being motion from the car. As the car moves along the road, compression of the PZT transducer outputs power, and it is transported to the car's battery. Additionally as CPU monitoring subsystem is in place to provide a value of the energy produced by the PZT transducer. This info will be displayed as a dashboard component.

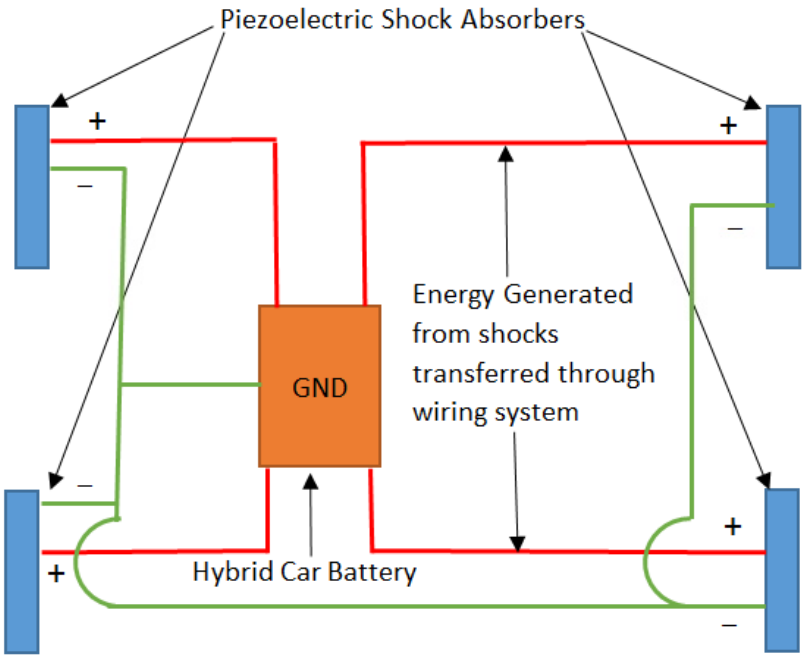

Figure 6: Electrical connections in the shock absorber system

The Piezoelectric absorbers generate energy while the car is in motion through the compression of the piezoelectric discs. As shown in Figure 6, that energy then travels through the wiring system connecting to the hybrid car battery. This energy is directly used to aid in the charging of the battery.

Scenarios

The average commute time in America is 25.4 minutes according to the U.S. census bureau. That means that the piezoelectric will be harvesting energy for roughly 55 minutes a day. Currently, depending on the road, the piezoelectric shock absorber will improve the fuel economy by around two to eight percent. The efficiency of piezoelectrics is sure to improve in the future, increasing the amount of energy saved. The piezoelectric shock absorber is completely passive and does not require power from the car to operate.

Total Cost Analysis

The predicted total cost of the piezoelectric shock absorbers will be around $800. This price was determined from the California Department of Energy. The California Department of Energy published an assessment of piezoelectric materials for roadway harvesting, which is different in that the piezoelectrics would be in the road instead of in the car, but the report stated that it would cost at most 1.5 million dollars for 9,843 piezoelectric units. These units require only slight modifications to be used in individual automobiles for a total cost of around $200/harvester or $800/vehicle. Piezo Systems Inc., a company out of Massachusetts, sells piezoelectric benders around the same size as the ones that we be needed in the car for as little as $120 per unit, and with installation costs that come to around $800/vehicle, agreeing with the cost from the California Department of Energy research.

Life Cycle Analysis

According to the same assessment by the California Department of Energy, the piezoelectric roadway would have an estimated lifetime of 5-10 years. As the proposed design is similar, the piezoelectric shock absorbers would have a lifetime of 5-10 years. At the end of the lifetime, the consumer should replace the shock absorbers with new ones.

Conclusions

For many participants, this project was the first experience with engineering process of designing a product, and the many steps that go with it. For instance, a survey was required in order to determine the focus of the project, which showed the importance of engineers to cater to the needs of the customers when designing a product. Additionally, the cost analysis and comparison of the importance of features were important steps in the design process, which

many future engineers may not have previously considered. This project gave crucial insight for engineering students by providing full exposure to the complex, behind-the-scenes process of product design.

The final design of the piezoelectric shock absorber achieves a successful level of financial benefits for customers and environmental benefits that support Delphi's *Green* megatrend. While the initial $800 price may appear steep when compared for the slight incremental increase in fuel economy provided by the shock absorber, the benefits must be considered in the long-term to see the true impact of the system. A widespread implementation of this system in hybrid cars would result in a drastic decrease on the dependency of natural fuel sources to operate vehicles. For the piezoelectric shock absorber, there is little to no danger in the event of a system malfunction. The piezoelectric material is retrofitted into common shock absorbers, so the only impact of system failure would be a decline in the energy that can be harvested while driving. In terms of future development, combination of piezoelectric shock absorbers with regenerative braking is taking the first steps towards a vehicle that is partially self-sufficient. To explain, a self-sufficient vehicle with this technology could be fueled primarily by the act of operating it. The piezoelectric shock absorber design is a major innovation in clean fuel sources for vehicles, and further development of the technology could lead to previously unimagined environmental benefits for the automobile of the future.

Sources

http://commcgi.cc.stonybrook.edu/am2/publish/General_University_News_2/SBU_Advanced_Energy_Team_Wins_2011_R_D_100_Award_for_Energy_Harvesting_Shock_Absorber_Technology.shtml

http://www.http://phys.org/news/2011-07-energy-harvesting-absorber-fuel-efficiency-award.html

Calculations and graphs

http://www.tandfonline.com/doi/full/10.1080/10584587.2013.778724#.VG9JJ4vF9jI

http://ieeexplore.ieee.org/stamp/stamp.jsp?arnumber=4283437

Figure 4 source

https://www.americanpiezo.com/knowledge-center/piezo-theory/piezoelectricity.htmlenergy.ca.gov/2013publications/CEC-500-2013-007/CEC-500-2013-007.pdf

Average Commute Time source

http://www.census.gov/prod/2011pubs/acs-15.pdf

California Department of Energy research

http://www.energy.ca.gov/2013publications/CEC-500-2013-007/CEC-500-2013-007.pdf

Piezoelectric cost (energy harvesting bender)

http://www.piezo.com/prodproto4EHkit.html#priceinfo

Shock absorber CAD file

http://grabcad.com/library/hydraulic-cylinder-dampener