Introduction to Engineering Design

EDSGN 100 Section 15 Team 8

Portable Electronics Charger

Submitted to:

Professor Xinli Wu, Ph.D., P.E.

Submitted on December 14, 2012

Submitted by:

Cavin Israel, Michael Ginther, Tyler Stevens, and Mark Paulson

Team members from left to right: Mark Paulson, Mike Ginther, Tylers Stevens, Cavin Israel

Abstract

The design project presented the challenge of creating a design and prototype for a portable charger for different types of electronic devices. Six weeks were spent brainstorming, designing, and developing a prototype that exceeds the requirements of the project. This report provides a description of how the final design was derived.

Table of Contents

Cover Page	P.1 Mark Paulson
Abstract	P.2 Mike Ginther
Table of Contents	P.3 Tyler Stevens
Introduction	P.4 Cavin Israel
Description of the Design Task	P.5 Mark Paulson
Design Approach	P.6 Mike Ginther
Prototype	P.7 Tyler Stevens
Engineering Analysis	P.8 Cavin Israel
Summary and Conclusions	P.9 Mark Paulson
Acknowledgement	P.10 Mike Ginther
References	P.11 Tyler Stevens

Introduction:

Many people in society consider cell phones and electronic devices life lines, especially people who have jobs in sales or really anything where traveling a lot is necessary and a cell phone or laptop is the only way to say in touch with employers, co-workers, and family. Phones are very important to these people and it is not always possible to charge via wall outlets and wait for it to charge. For these situations, it is necessary that a portable electronics charger is created that can accept two or more different types alternative energy.

Description of the Design Task

Problem

People in today's society have a great dependency on their mobile devices. These electronic devices seem to have a reputation of running out of battery at the most inconvenient of times This trend is even more prevalent with newer phones and technology that require more energy to sustain use.

Mission Statement

For these everyday people, this project gave the task of developing a way to charge for mobile devices that operates from two alternative energy sources other than standard wall or vehicle power.

Design Specifications

The shaker was approximately 5 inches long and 2 inches wide. Each of the solar panels will be approximately 6 inches by 6 inches.

Design Approach

Gantt Chart							
		Nov. 5	Nov. 12	Nov. 19	Nov. 26	Dec. 3	Dec. 10
Info gathering	Problem Statement						
	Mission Statement						
	Customer Needs						
	Gantt Chart						
Brainstorming	Brainstorm						
	Gather Information						
Design Concepts	Finalize Five Designs						
	Design Matrix						
	Cost Analysis						
Prototype	Working Drawing						
	Working Mechanism						
	Design Prototype						
	Test Prototype						
	Finalize Prototype						
Design documentation	Conclusion Report						
and demonstration	References						
	Acknowledgements						
	Oral Presentation						

Table 1. Gantt Chart

Customer Needs: Our customer needs a portable electronic charging device that can accept two different types of alternative energy meaning any energy that's not your average wall or car outlet, and is very portable and lightweight so that it can be brought anywhere.

Individual Design concepts:

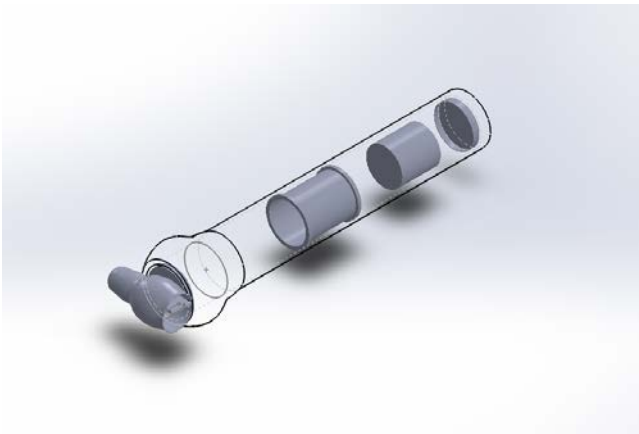

Figure 1. Hand Shaker

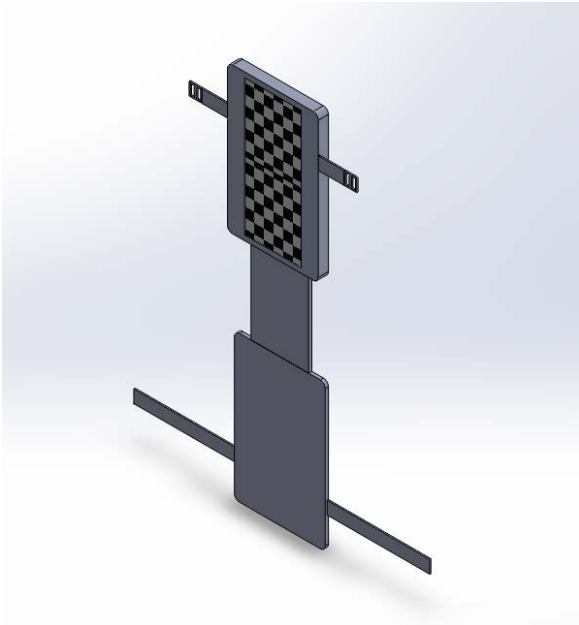

Figure 2. Solar Panel Back Pack covering

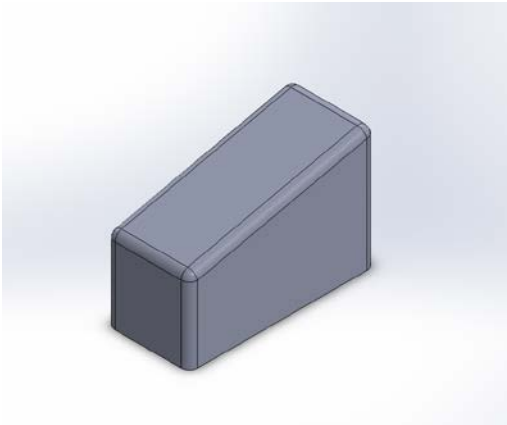

Figure 3. Sole Insert

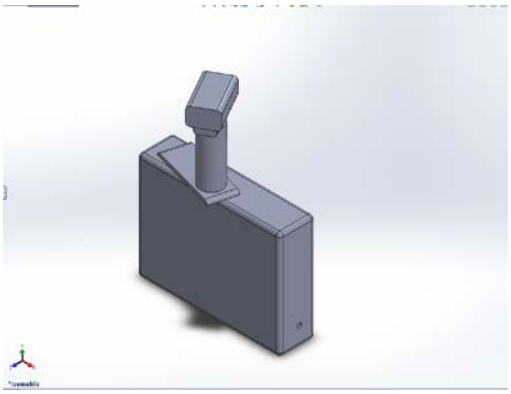

Figure 4. Hand Crank

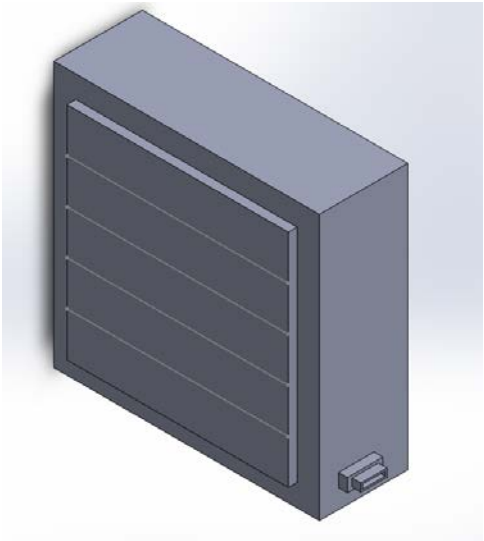

Figure 5. Thermal Pad

Combined Design Concepts:

1) *Solar panel and crank*: Give the customer a solar panel to attach to a backpack or suitcase and also give them a crank to use in the case of bad weather or no energy left on the solar panels.

2) *Hip shaker and solar panel*: Same idea as design one but instead of a crank the customer gets a shaker to put on their hip.

3) *Shoe shaker and thermal*: Give the customer a thermal pad instead of a solar panel, still to be put on a backpack or an article of clothing. Also give them a shaker to be put on the shoe in case there is no possible way to create thermal energy at the time.

4) *Hip Shaker and solar panels*: Solar panels like in designs one and two b in this idea for maximum energy production. It also has a backup shaker.

5) *Sole inserts and solar panels*: Solar panels to be put on a backpack, also sole inserts that will produce energy every time a step is taken.

Design Matrix--Team 8 Alternative Energy Designs						
	Control-- Kinetic Flashlights	1) Solar and Crank	2) Hip Shaker and Solar	3) Shoe Shaker and Thermal	4) Shakers and Solar	5) Sole inserts and Solar Panel
Ease of Use	0	0	++	+	++	++
Reliability	0	-	0	0	+	+
Functionality	0	+	+	+	++	+
Portability	0	-	0	+	0	+
Durability	0	0	0	0	0	0
Cost of Production	0	-	-	-	-	-
Total	0	-2	2	2	4	4
Continue?	No	No	No	No	Yes	Yes

Table 2. Design Matrix 1

Concept generation: Designs four and five were the only designs that had enough promise to move onto the next stage of testing. Designs one through three would have cost too much and would not have been reliable or durable enough for people to actually buy them.

Team 8 Final Design Matrix (Weighted Scores)			
	Weighted Score	Shakers and Solar Panels	Sole Inserts and Solar Panels
Ease of Use	0.1	5	5
Reliability	0.25	4	4
Functionality	0.25	5	4
Portability	0.15	3	4
Durability	0.15	3	3
Cost of Production	0.1	2	2
Total		3.85	3.75

Table 3. Design Matrix 2

Concept generation cont.: After weighting the scores it was found that design four, the shaker and solar panels, was the best option to continue on with. This was the best design overall because it gives the customer a shaker to put on almost any part of the body or clothing. It also includes solar panels to put on a backpack or clothes so that customers will almost always have the power to charge electronic devices.

Trade studies: The groups' research found that solar panels are pretty sturdy so having them on a backpack should not be a problem; also the shaker is very sturdy and easy to use.

Prototype

The Prototype is 1:1

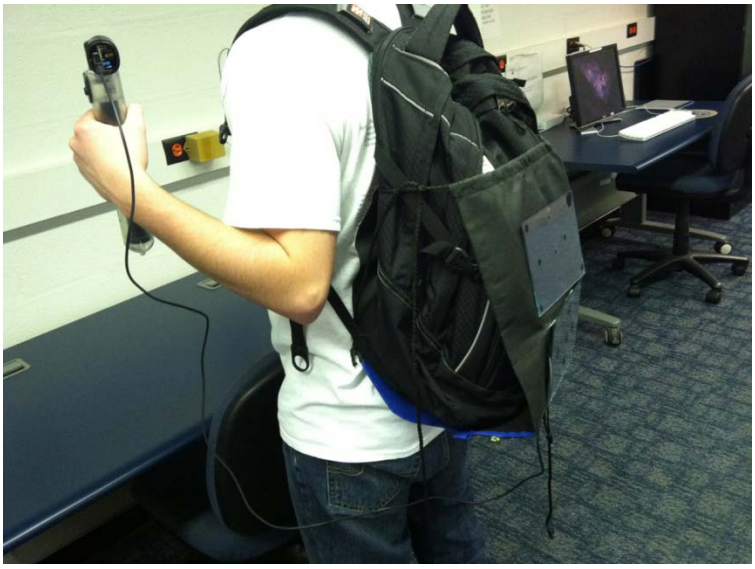

Figure 6. Final Prototype

<u>Design features</u>

The design has a shaker that can be places almost anywhere on one's body. It also has two solar panels that are meant to be put on a backpack or briefcase but could also be put on clothing if need be. Finally the shaker and solar panels are connected with wiring and connected to a battery pack to hold all of the energy.

Detailed Drawings of Final Prototype:

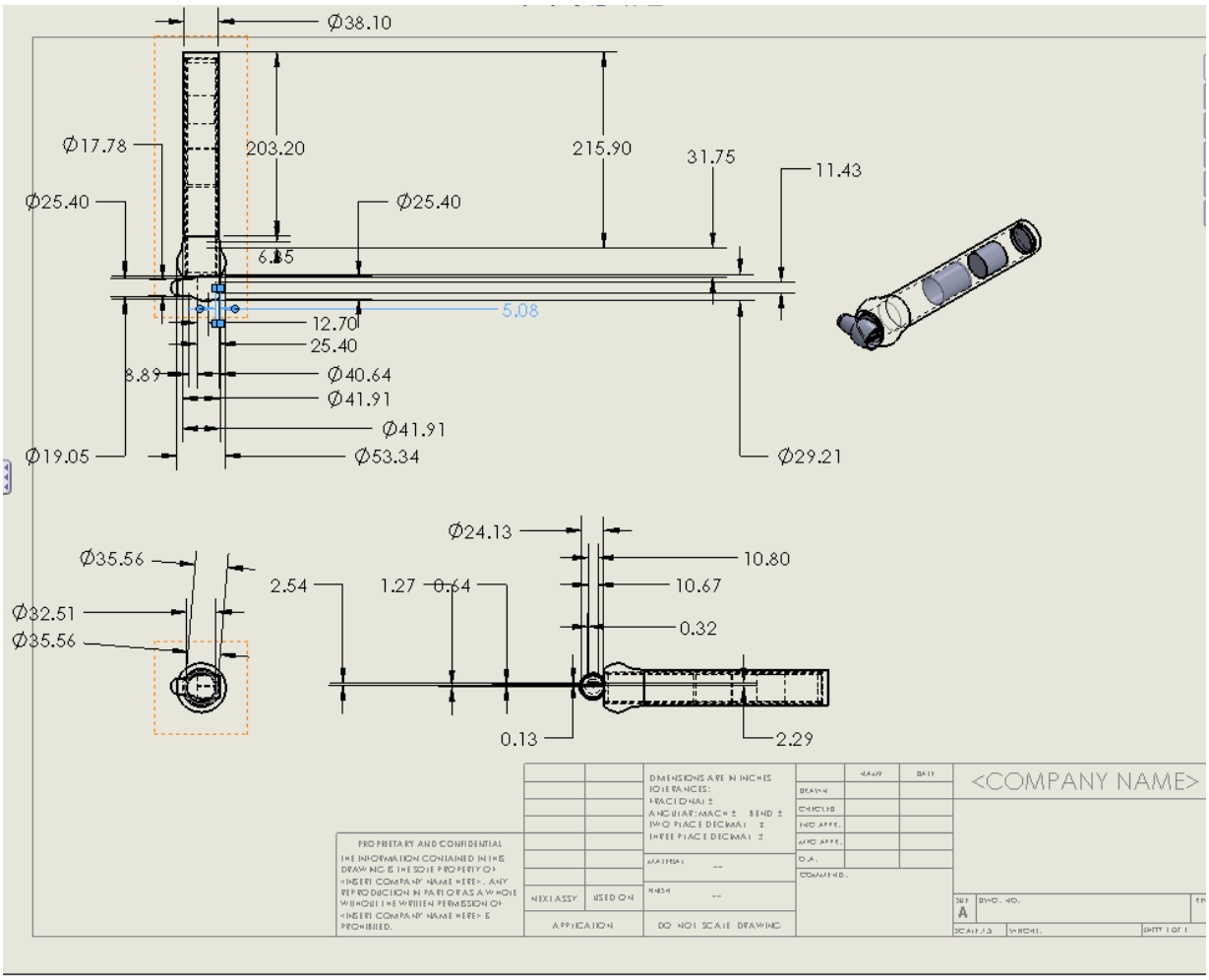

Figure 7. Hand Shaker Detailed Drawing

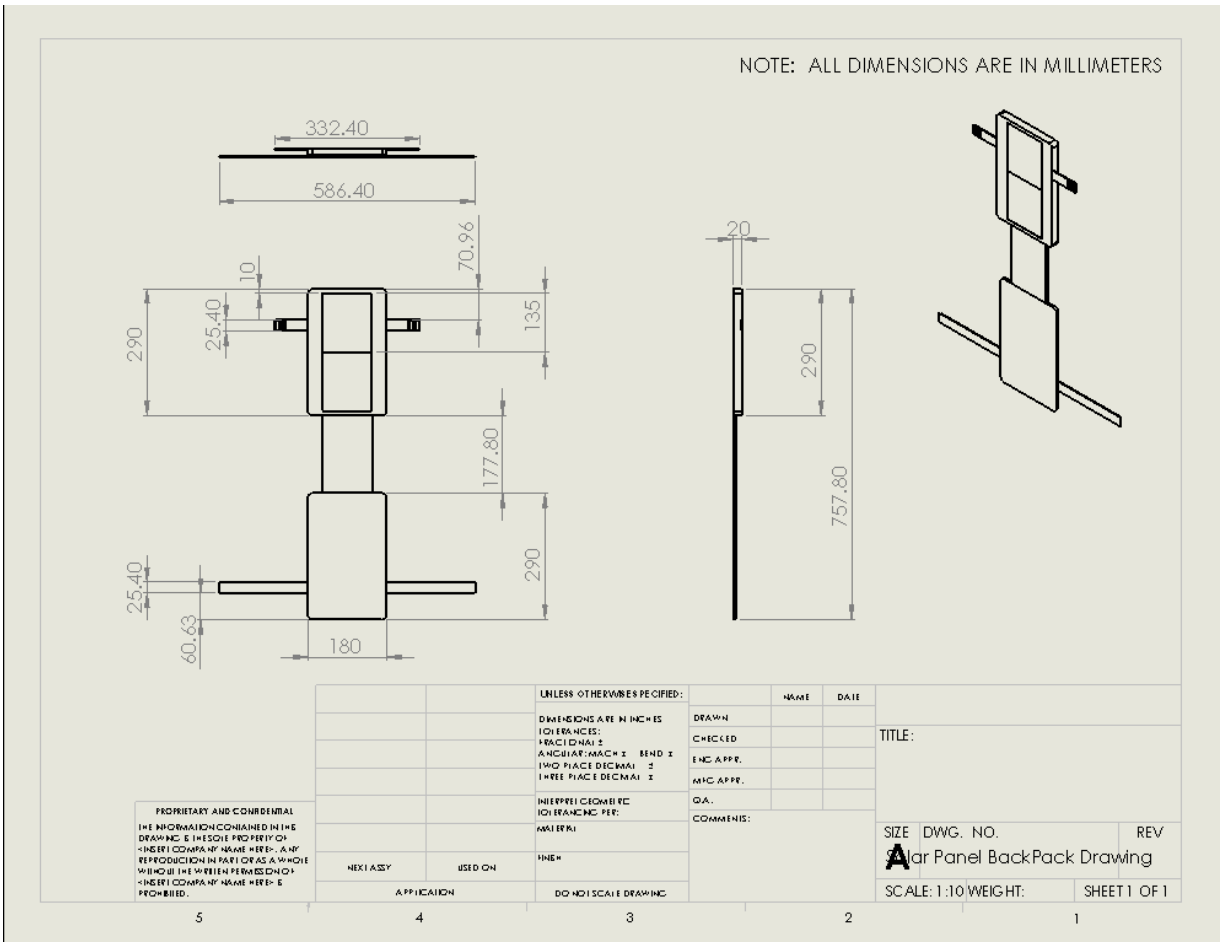

Figure 8. Solar Panel Detailed Drawing

Engineering and Cost Analysis

Engineering Analysis

This portable electronics charger is built so that it is extremely easy to use, but also does its job well, all for a reasonable price. The shaker was built into the design so that it can be put anywhere that the customer desires. The solar panel is designed to attach onto something like a backpack, briefcase, or even an article of clothing so that it can be brought almost anywhere. The final design was also made with the thought of appearance and not many people would want to wear this if there where large amount of wires that had to be tucked into clothes, so the final product will have minimal wires so that it is easy to use and store but also looks good on the user.

Cost Analysis

For the final design of two shakers and solar panels the production cost will be about $75 to produce assuming all of the materials are bought with a retail mark up, not buying in bulk. One 5.314 x 4.4in. solar panel will cost $25 and the final design has two on it so that will total $50. The materials for the shakers will cost about $5 per shaker and for the design customers get one shaker. Finally the overall fabric, hooks, and other materials to put the final design will cost about $20 bringing the design to its total of $75.

Conclusion

This charger has the potential to help millions of people everywhere. The design will give people power as long as they have some exposure to sun light or if they walk anywhere to activate the shaker. It's very hard to go through a complete day without doing both of these activities but with this design you only need to do one. People who buy this charging device won't have to worry about a dead phone or laptop again. With all requirements met, this design creates an affordable and efficient solution to the problem of charging electronics when no traditional wall or car outlets are available.

PowerPoint Presentation

Design Project 2
Portable Electronics Charger

Group 7
Cavin Israel, Michael Ginther,
Tyler Stevens, Mark Paulson

Problem

- Almost everyone has multiple cellular devices that always need charging and traditional wall or vehicle outlets are not always available.

Mission

- For these everyday people it is necessary to create an idea and model for a portable charger that can accept two types of alternative energy.

Idea

- The model has one shaker to produce kinetic energy by almost any type of movement.
- It also has two solar panels to be placed on a backpack or clothing to transfer energy from the sun to user friendly energy.

Connection

- For the final product a female USB port would be connected to the shaker and each solar panel and wiring would collect all of the energy produced and store it in a battery placed on the hip.

Pricing

- The final product will cost about $75 to produce.

Thank You!

Handout Brochure

Final Thoughts

The final cost will cost about $75 to produce. That includes buying all the materials with a retail mark up. It's safe to assume that the final product will actually cost less to produce.

Special Thanks to:
Dr. Xinli Wu
Harris Engineering
Nick Petrunyak

Team 8

Portable Electronics Charger

Cavin Israel, Michael Ginther
Tyler Stevens, Mark Paulson

Project Objective

Problem:
Almost everyone has multiple devices that always need charging and traditional wall or vehicle outlets are not always available.

Mission:
The design team set out to create an idea and model prototype for a portable charger that can accept two types of alternative energy.

Final Ideas

Idea one:
Sole inserts and solar panels: Solar panels to be put on a backpack, also sole inserts that will produce energy every time a step is taken.

Idea two:
Solar panels to be put on a backpack or clothes and a backup of a shaker that can be put anywhere to produce the most possible energy.

The Final Design?

For the final design idea two was picked because the group found that not only would it be cheaper to make, it would also produce more energy

How it Works

The design has two solar panels and a shaker. A female USB port would be connected to the shaker and each solar panel and wiring would collect all of the energy produced and store it in a battery placed on the hip. A charger just needs to be connected to the battery and any phone or computer can now be charged

Acknowledgement

Our group would like to acknowledge and thank Dr. Xinli Wu and his TA Nick Petrunyak for their guidance and assistance throughout the task. The project would not have gotten finished without them. Also thank you to Harris Engineering for sponsoring this design project.

References

"How Long Do Solar Panels Last?" *Home Solar 101 A Homeowners Guide to Solar How Long Do Solar Panels Last Comments. One Block Off the Grid, n.d. Web. 03 Dec. 2012.*

"OffGrid Solar Backpack." *Voltaic*. Voltaic Systems Inc., n.d. Web. 03 Dec. 2012.