Can Crushing Recycling Bin

http://www.personal.psu.edu/clc5698/edsgn100_fall13_section15_team1_dp2.pdf

Sponsored by Alcoa

EDSGN 100 – Introduction to Engineering Design

Section 15

Submitted to: Xinli Wu

www.engr.psu.edu/xinli/edsgn100/

Submitted by:

Team 1: Mohamed Almaimani, Christopher Campos, Centryll Scott, Andrew Houpt, Derek McBlane (from left to right)

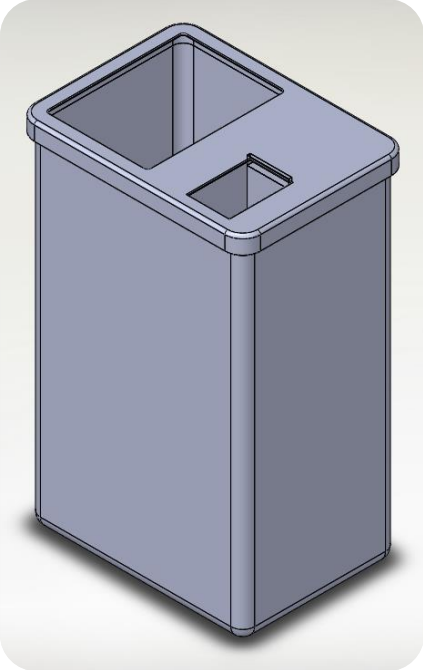

Abstract

Centryll Scott

The Can Crusher design will increase the capacity for cans compared to traditional recycling bins, increasing the efficiency of aluminum collection. Outdoor versions are powered by solar panels for increased sustainability. Implementation of the Can Crusher on campus will redefine the way cans are recycled, and increase interest in recycling.

Table of Contents

1. Abstract 1
    1. *Centryll Scott; css5313@psu.edu*
2. Introduction 4
    1. *Mohamed Almaimani; mma239@psu.edu*
3. Description of Design Task 5
    a. Problem Statement
        1. *Derek McBlane; ddm5245@psu.edu*
    b. Mission Statement
        1. *Derek McBlane; ddm5245@psu.edu*
    c. Design Specifications
        1. *Derek McBlane; ddm5245@psu.edu*
4. Design Process/Approach 6
    a. Gantt Chart
        1. *Christopher Campos; clc5698@psu.edu*
    b. Concept Generation 7
        i. Fig. 1: Christopher's Concept Design
            1. *Christopher Campos; clc5698@psu.edu*
        ii. Fig. 2: Derek's Concept Design
            1. *Derek McBlane; ddm5245@psu.edu*
        iii. Fig. 3: Andrew's Concept Design
            1. *Andrew Houpt; alh5808@psu.edu*
        iv. Fig. 4: Mohammed's Concept Design
            1. *Mohamed Almaimani; mma239@psu.edu*
        v. Fig. 5: Centryll's Concept Design
            1. *Centryll Scott; css5313@psu.edu*
    c. Design Idea/Concept Selection – Design Matrix 10
        1. *Christopher Campos; clc5698@psu.edu*
        2. *Derek McBlane; ddm5245@psu.edu*
    d. Trade Studies 11
        1. *Christopher Campos; clc5698@psu.edu*
    e. Description of Selected Design
        1. *Christopher Campos; clc5698@psu.edu*
5. Prototype/Model 12
    a. Relative Design Drawings
        1. *Derek McBlane; ddm5245@psu.edu*
        2. *Andrew Houpt; alh5808@psu.edu*
    b. Prototype Digital Images 16
        1. *Derek McBlane; ddm5245@psu.edu*
    c. Prototype Images 18
        1. *Derek McBlane; ddm5245@psu.edu*
        2. *Andrew Houpt; alh5808@psu.edu*
        3. *Christopher Campos; clc5698@psu.edu*
        4. *Mohamed Almaimani; mma239@psu.edu*
        5. *Centryll Scott; css5313@psu.edu*

d. Design Features 19
1. *Derek McBlane; ddm5245@psu.edu*
6. Analysis 20
a. Definition of Sustainability
1. *Andrew Houpt; alh5808@psu.edu*
b. Rationale for Selection of Product
1. *Mohamed Almaimani; mma239@psu.edu*
c. Cost Analysis
1. *Andrew Houpt; alh5808@psu.edu*
d. Assessment of Efficiency Advantage
1. *Mohamed Almaimani; mma239@psu.edu*
e. Implementation Plan 21
1. *Andrew Houpt; alh5808@psu.edu*
7. Conclusion 22
1. *Centryll Scott; css5313@psu.edu*
8. PowerPoint Presentation 23
1. *Derek McBlane; ddm5245@psu.edu*
9. Informational Brochure 27
1. *Derek McBlane; ddm5245@psu.edu*
2. *Christopher Campos; clc5698@psu.edu*
10. Acknowledgement 28

Introduction

Mohamed Almaimani

Since 1888, when a process to economically produce aluminum was discovered, aluminum has played a key role in engineering efficient and sustainable products. Aluminum is a very unique element that has a lot of advantages and uses due to its intrinsic properties. Nowadays, using aluminum in industry has become more significant and common. An extensive usage of aluminum is soda cans. In fact, millions of aluminum soda cans are being consumed which means those aluminum cans require recycling. Recycling aluminum cans has some pros such as cutting down on energy needed to produce new aluminum, using the space of recycling bins more effectively, utilizing less trash bags, and requiring less time spent by employees changing trash bags. Thus, an appropriate approach for recycling is aluminum can crusher. The aluminum can crusher will be used on the main campus of Penn State University. Moreover, the aluminum can crusher will be used on many places on campus such as Dorms, Commons, Beaver Stadium, apartment complexes, frat houses so that every student can crush his or her can after he or she is done with it.

Description of the Design Task

Derek McBlane

Problem Statement:

The problem was that with the large number of aluminum cans used on campus, especially in Beaver Stadium and the fraternity houses, the recycling bins for metal became full of aluminum cans quickly. This increased the need for the recycling containers to be emptied frequently, wasting time and resources. Furthermore, people who would potentially recycle their aluminum cans were turned to throwing their cans away.

Mission Statement:

The mission was to design a system to reduce the physical size of the aluminum cans being placed in recycling containers so that more cans could be stored before being removed, thus improving efficiency by reducing the number of bags used and the frequency with which the recycling bins need to be emptied, as well as increasing interest in recycling aluminum cans.

Design Specifications:

The system designed needed to be cost effective in the long run, more efficient than the current system, simple and quick to use, and sustainable.

Design process/approach

Table 1. Gantt Chart

	21-Oct	4-Nov	11-Nov	18-Nov	20-Nov	2-Dec	4-Dec	9-Dec
Information Gathering								
Applications of Alluminum								
Solvable Problems on Campus								
Brainstorming								
Finding Solutions to Campus Problems								
Solution Concept Group Presentation								
Concept Selection								
Design Matrix								
Final Evaluation								
Cost Evaluation								
Design Drawings								
Protype Building & Testing								
CAD Design								
Physical Model Construction								
Design Evaluation & Testing								
Finalized Design Drawings								
Design Documentation & Presentation								

Concept Generation - Brainstorming

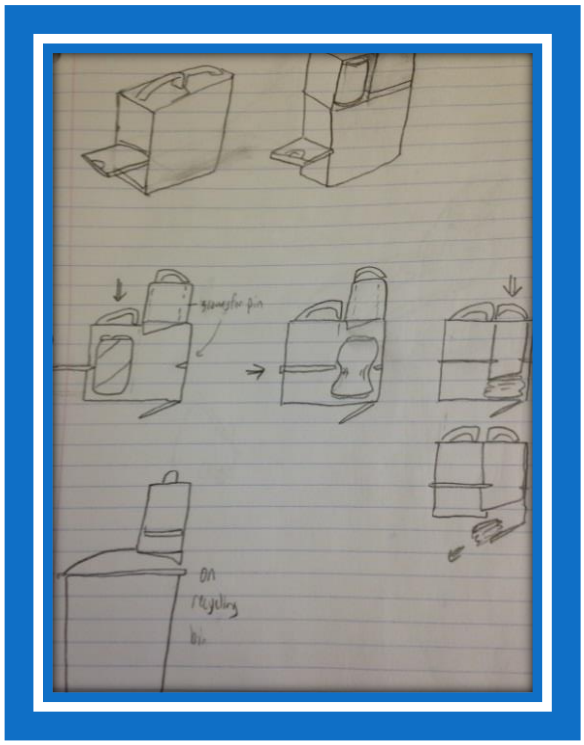

Designer: Christopher Campos

Two-Chamber attachment for existing recycling bin lid.

Aluminum cans are placed within first chamber and pushed down into the main body of the attachment. At which point, a pointed edge is pushed in to push can under second chamber while simultaneously pinching sides. Finally, second chamber is pushed down to crush the can and drop into bin.

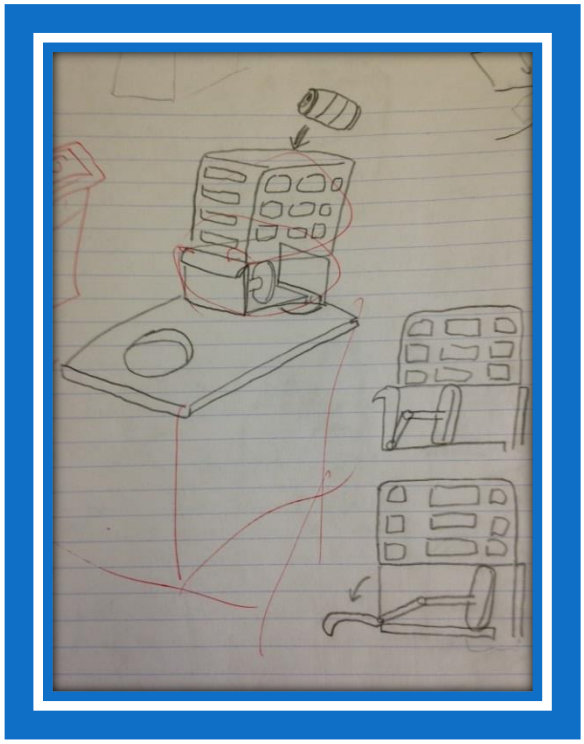

Designer: Derek McBlane

Lid attachment plunger crushing system with storage cage.

(For better representation of process within the attachment the drawing has a wall not drawn in.)

Cans are withheld within storage cage until space is available within crusher. Handle is pulled down while plunger is extended, crushing the can in the process.

(Top) Fig.1: Christopher's Concept Design

(Bottom) Fig.2: Derek's Concept Design

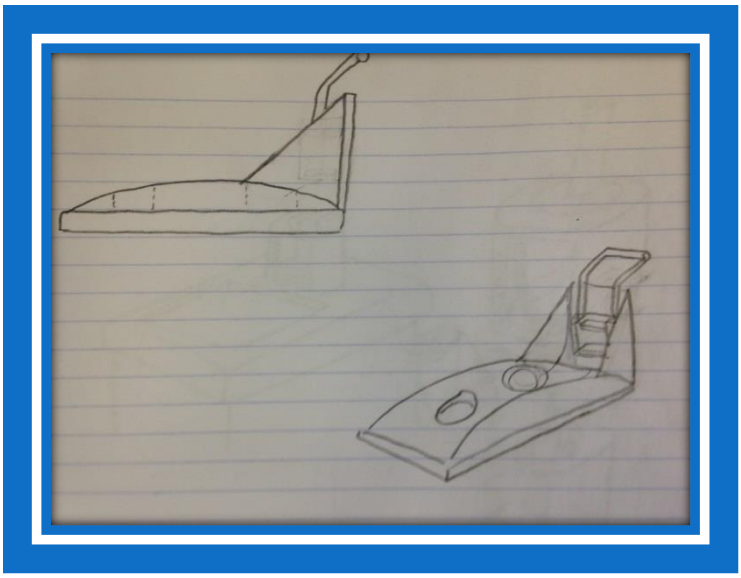

Designer: Andrew Houpt

Vertical can crusher lid attachment.

Aluminum can is placed between two plates attached to handle. One plate is attached to handle as the other is fixed to the back enclosure of the attachment. Both panels swivel while handle gradually is pushed down by user. Space between plates gradually decreases, crushing the can. At which point, the user removes crushed result and places into bin.

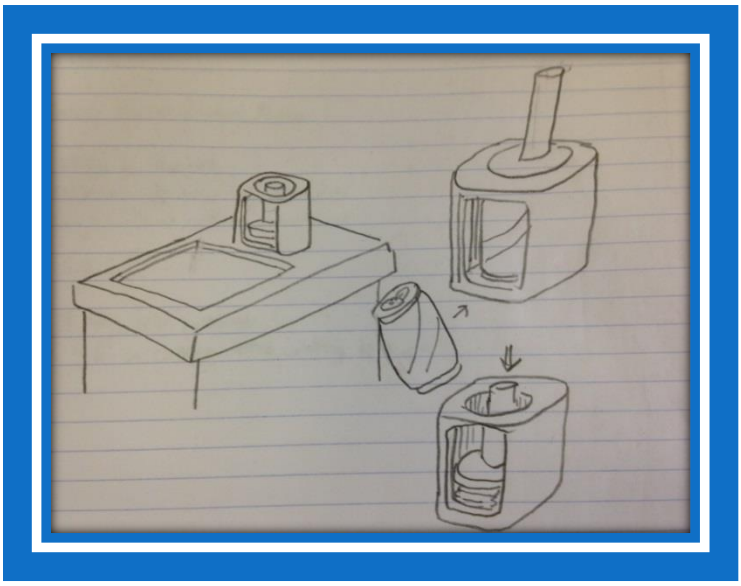

Designer: Mohamed Almaimani

Redesign Lid fitted with can crusher and expanded hole for larger aluminum items.

Aluminum cans are placed within chamber. After which, the user simply pushes down the extension coming from the top of the fitted crusher, resulting in the can being crushed. The user then simply places can in hole designated.

Other products larger than a standard aluminum can are placed within large opening.

(Top) Fig.3: Andrew's Concept Design

(Bottom) Fig.4: Mohamed's Concept Design

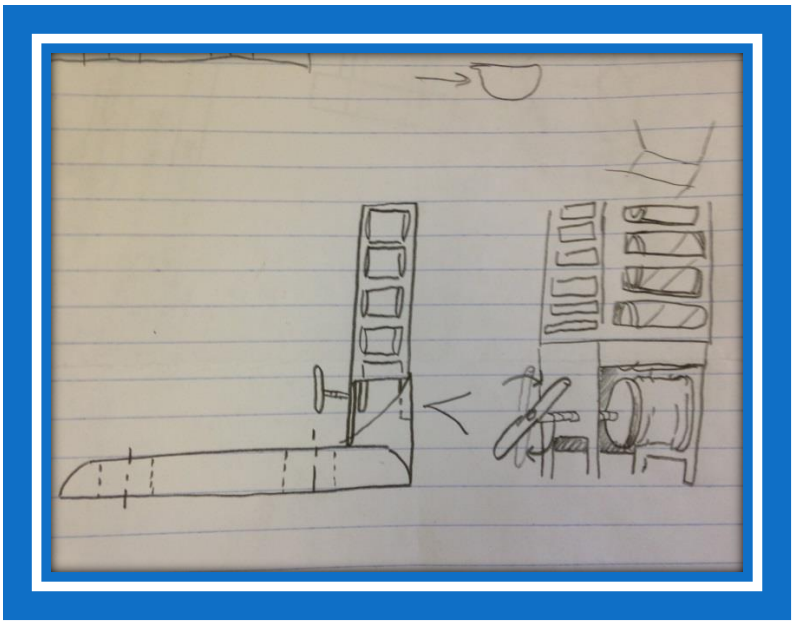

Designer: Centryll Scott

Twisting handle can crusher attachment for existing recycling bins, with storage space.

Aluminum cans are stored above can crusher inside storage area. Can drops into main chamber horizontally between moving plate and back of housing. The operator twists the handle, then moves the plate attached to crush the can.

Fig.5: Centryll's Concept Design

Table 2. Weighted Design Matrix

	1	2	3	4	5
Designer	Andrew	Derek	Mohamed	Christopher	Centryll Scott
Simplicity (45%)	+	+	+	-	0
Number of Moving parts (10%)	+	0	0	-	-
Ease of Attachment (25%)	-	-	+	+	-
Size (5%)	-	-	0	-	-
Ability to Cause harm (15%)	+	+	-	-	+
Sum 0's	1	2	2	0	1
Sum +'s	2	2	2	1	1
Sum -'s	2	2	1	4	3
Unweighted Score	1	0	1	-3	-2
Unweighted Ranking	3	2	1	5	4
Weighted Score	0.40	0.30	0.55	-0.5	-.25
Weighted Ranking	2	3	1	5	4
Comments	Attachment seems difficult to operate after attaching. Awkward placement could make for center of balance to be a problem for when the can is too light.	Plunger system seems very simple to use. Storage cage, although a good idea, may prove to make recycling bins fairly top heavy when attached.	Very simple design. Designing a whole lid may prove to be less cost effective initially. Simple can crushing design seems identical to if the user were to simply stomp on the can prior to disposal; there is a lack of incentive to use crusher.	Too large to attach, too many moving parts.	Fairly simple design, too time consuming. Attachment to lid would prove to make can too imbalanced.

Trade Study and Description of Selected Design

Trade Study:

The final design chosen closely resembled the design created by Mohamed Almaimani. The expanded opening paired with the can crusher allows for recycling to be readily available as opposed to simply forced upon the user to use. The can crusher attachment is now automatically operated with a gear system controlling a moving panel, while simultaneously crushing any object within the main chamber. To prevent any injury, the moving panel operates only when the attached see through covering is firmly closed. Furthermore, if the covering is forced open at any point during the process, the panel stops all action until sealed once more. At the end of the crushing space lies a slit in the flooring big enough for a crushed can to slip through, after which immediately collecting in the recycling bin under the lid.

Description of Selected Design:

The final design chosen closely resembled the design created by Mohamed Almaimani. The expanded opening paired with the can crusher allows for recycling to be readily available as opposed to simply forced upon the user to use. The can crusher attachment is now automatically operated with a gear system controlling a moving panel, while simultaneously crushing any object within the main chamber. To prevent any injury, the moving panel operates only when the attached see through covering is firmly closed. Furthermore, if the covering is forced open at any point during the process, the panel stops all action until sealed once more. At the end of the crushing space lies a slit in the flooring big enough for a crushed can to slip through, after which immediately collecting in the recycling bin under the lid.

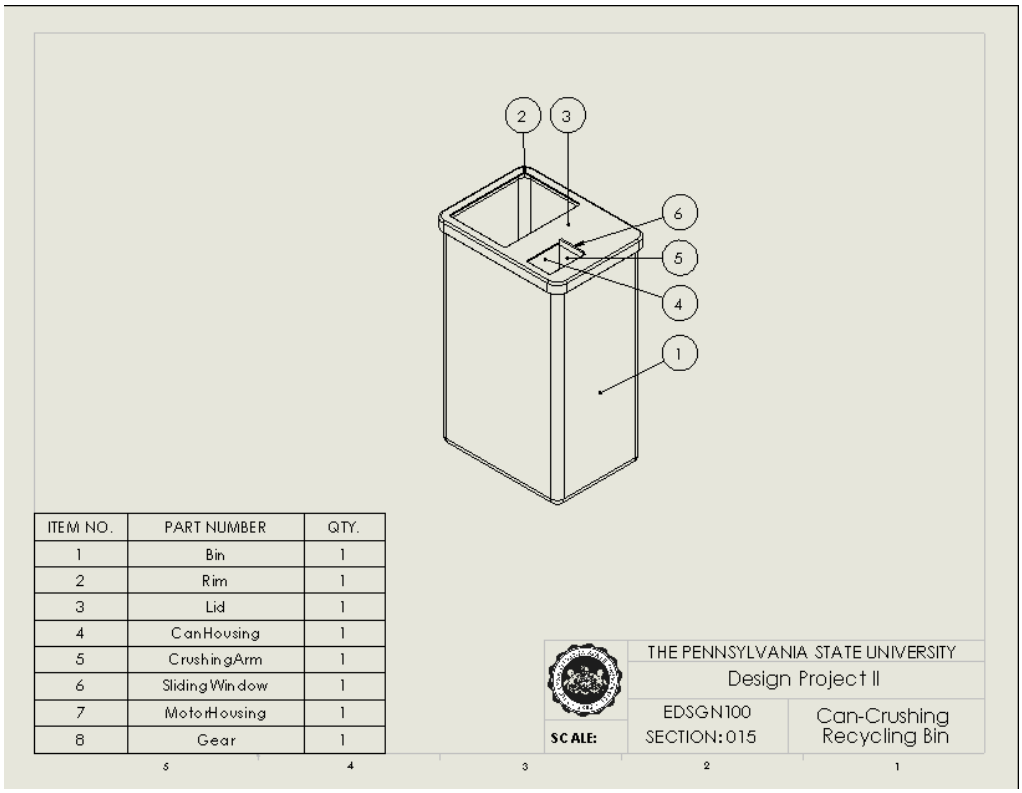

ITEM NO.	PART NUMBER	QTY.
1	Bin	1
2	Rim	1
3	Lid	1
4	CanHousing	1
5	CrushingArm	1
6	SlidingWindow	1
7	MotorHousing	1
8	Gear	1

FIG. 6. Can Crushing Recycling Bin Assembly Drawing

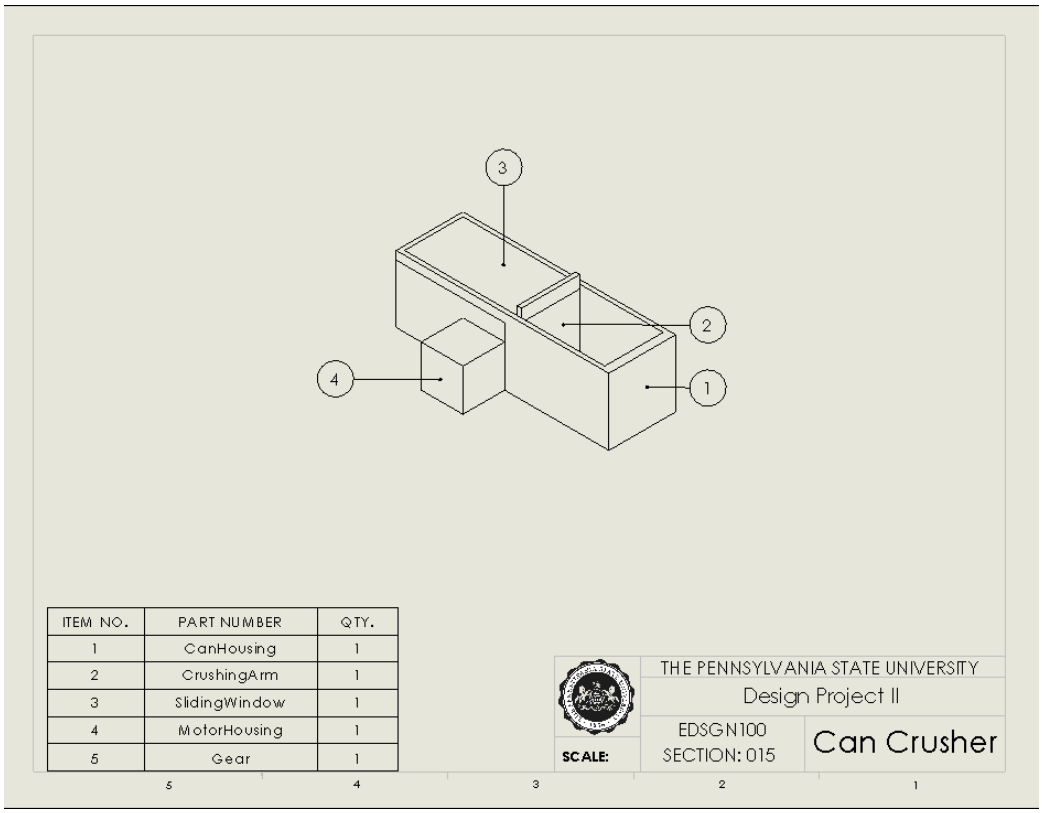

ITEM NO.	PART NUMBER	QTY.
1	CanHousing	1
2	CrushingArm	1
3	SlidingWindow	1
4	MotorHousing	1
5	Gear	1

FIG. 7. Can Crusher Assembly Drawing

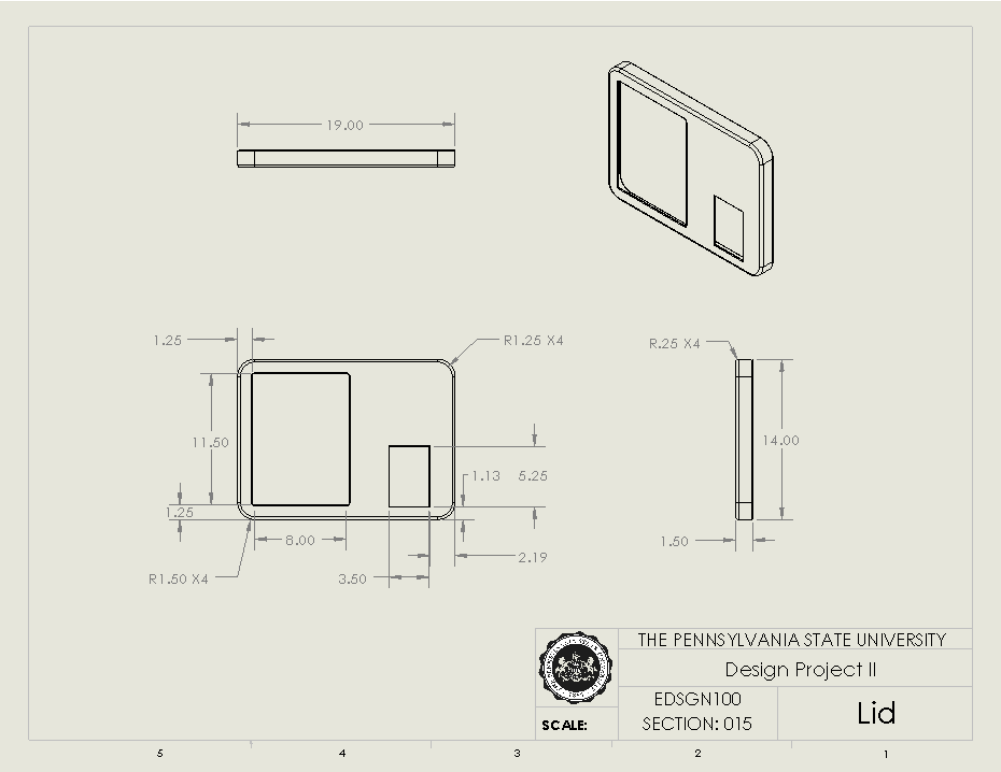

FIG. 8. Lid Detail Drawing

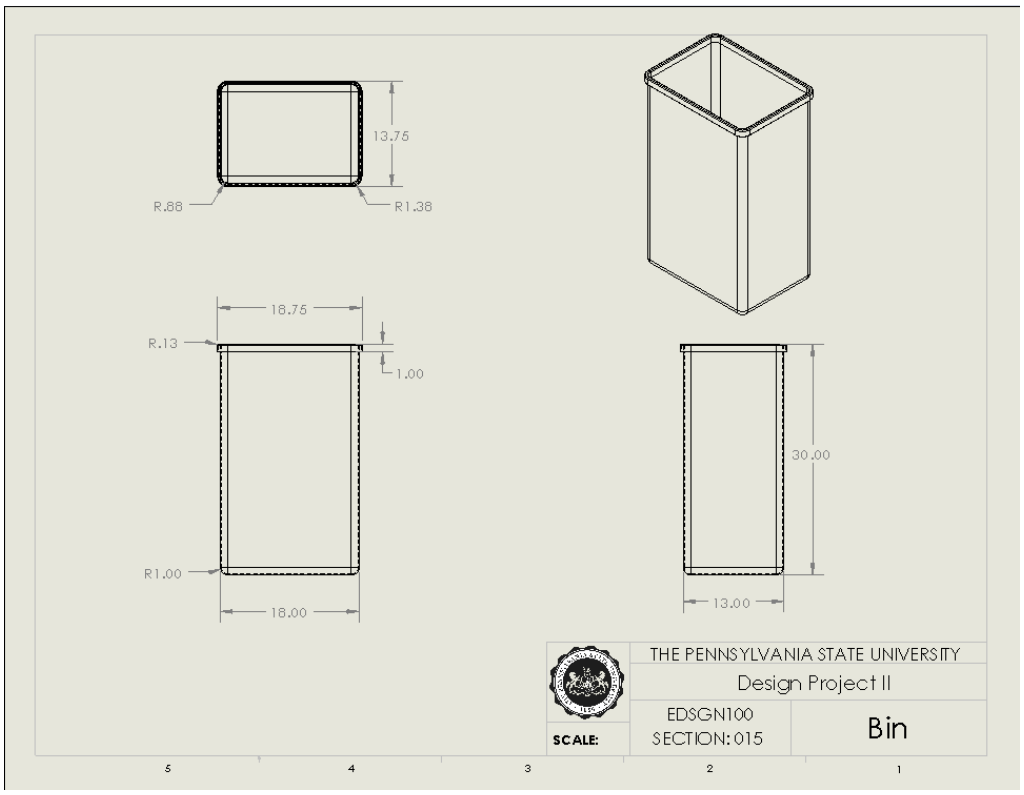

FIG. 9. Bin Detail Drawing

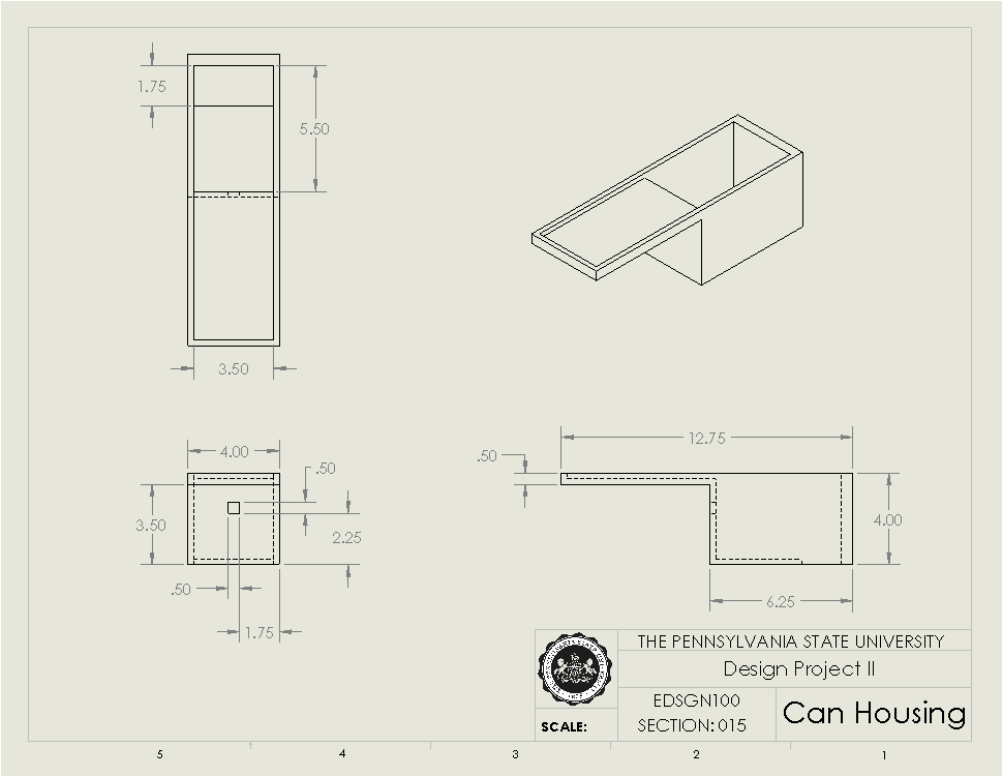

FIG. 10. Can Crusher Housing Detail Drawing

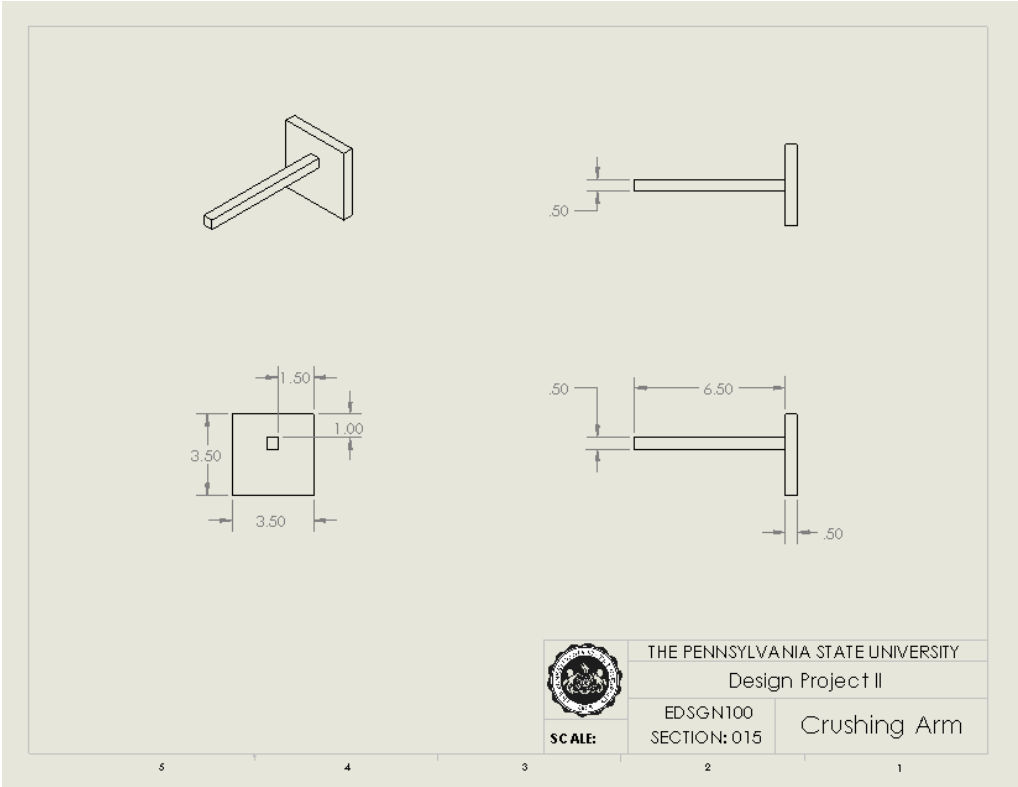

FIG. 11. Crushing Arm Detail Drawing

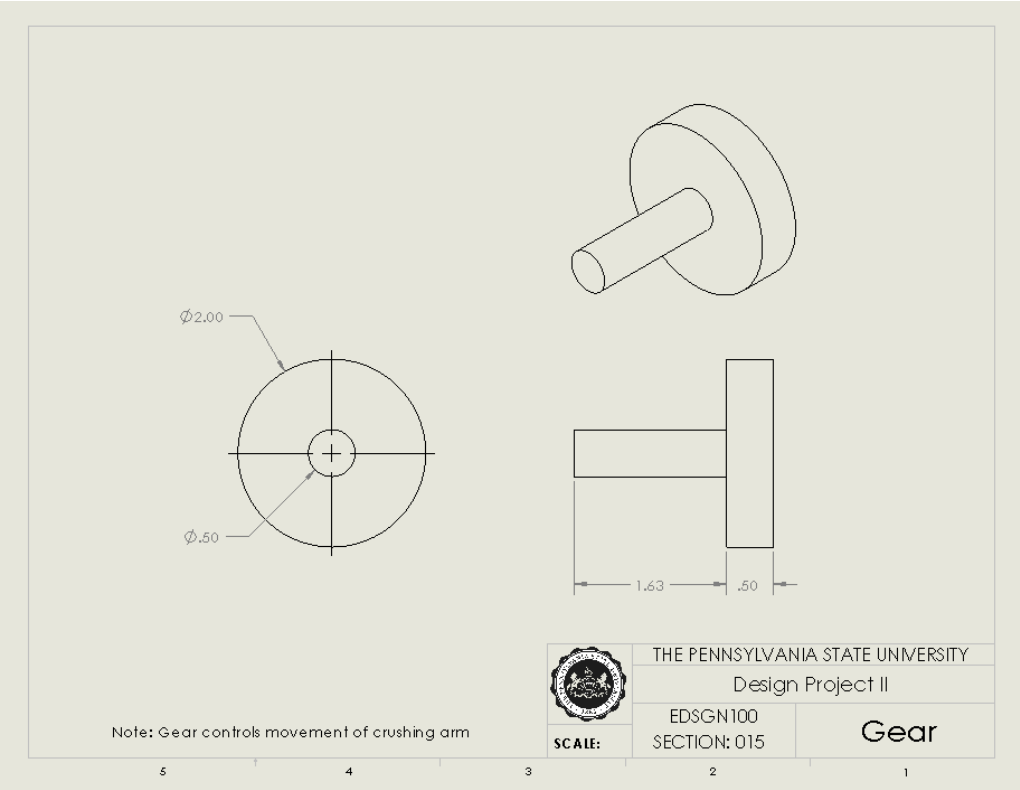

FIG. 12. Gear Detail Drawing

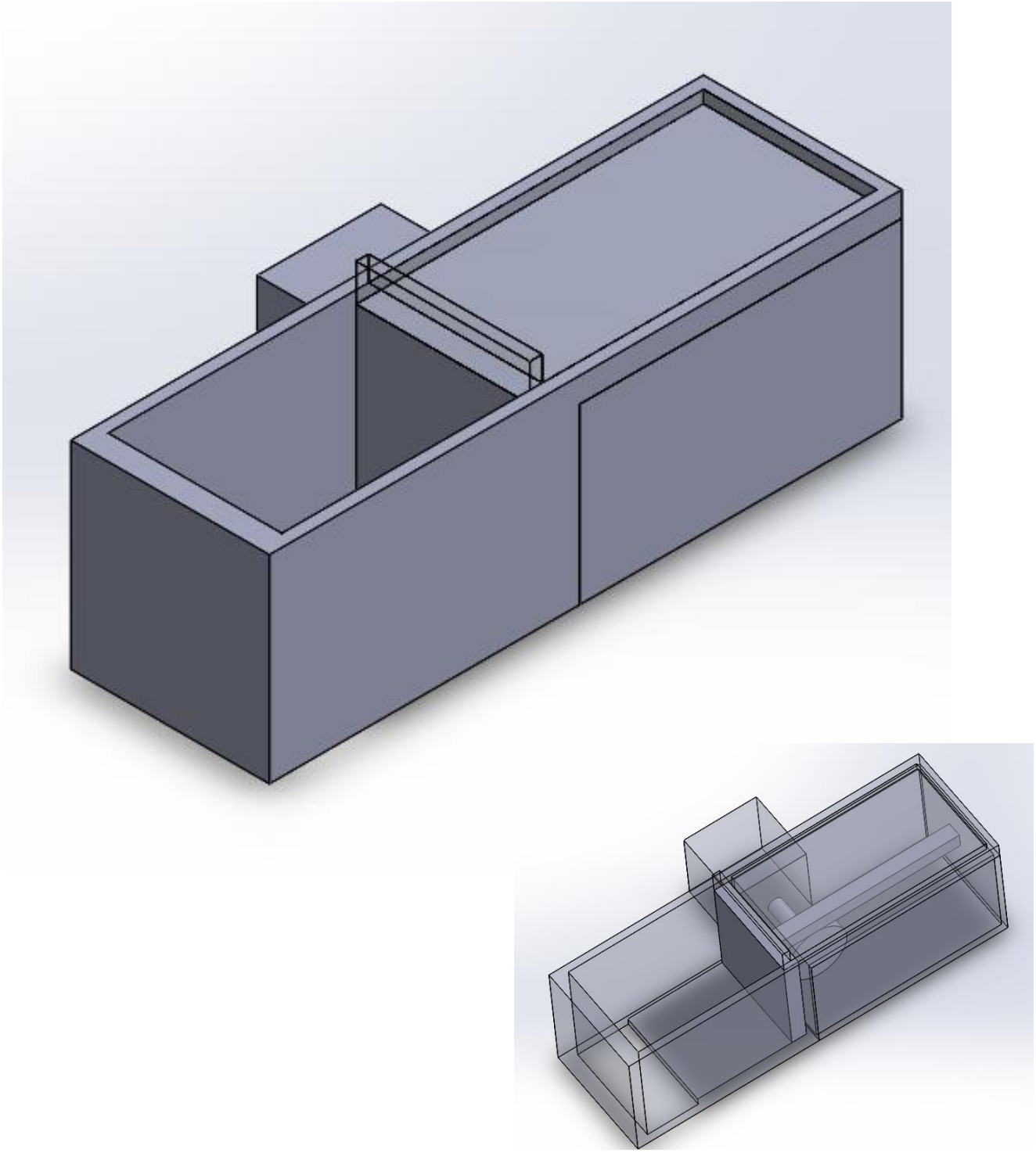

FIG. 13. Can Crusher Assembly (Digital)

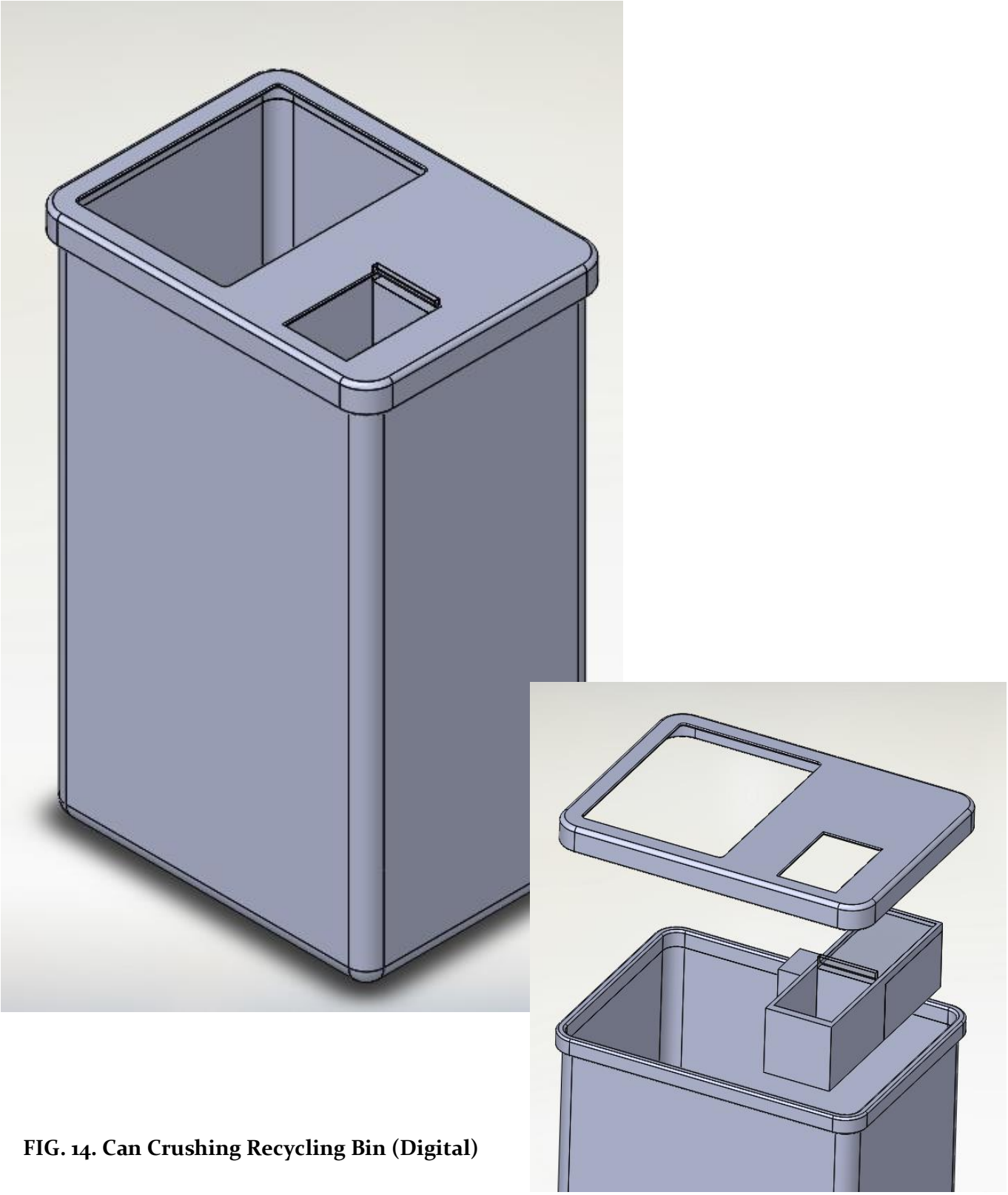

FIG. 14. Can Crushing Recycling Bin (Digital)

FIG. 15. Can Crushing Recycling Bin

FIG. 16. Open Window

FIG. 17. Closed Window

FIG. 18. Can Crusher Bottom

FIG. 14. Can Crusher Top

Design Features:

Our recycling bin is made of aluminum, a very durable metal that, at the same time, isn't too costly. In addition, the aluminum construction includes the benefit of sustainability; once the recycling bin is in need of replacement the old one can be recycled. As far as the can crusher aspect of the recycling bin, it was designed to be incredibly user friendly so that people were not turned away from using it. The operation is as simple as placing an aluminum can in the receptacle and closing the translucent window to initiate the can crusher. This window also allows the user to view the can being crushed, which is an added benefit. The crusher is also incredibly safe since the window must be closed for the crusher to operate, and the arm will withdraw if the window is forced open, meaning no injuries are possible with a recycling bin that isn't defective.

Definition of sustainability:

The ability to sustain a certain status of a discarded product without being destroyed or utilized entirely. Instead, this product is being recycled and then used for industrial purposes. Indeed, the main goal of recycling is to protect our environment by helping to control environmental issues. Instead of getting rid of the valuable materials, they are recycled so they can last for a long time.

Rationale for Product Selection:

There are many reasons for selecting this product. For instance, recycling aluminum cans assist preserving the environment. Another reason is unchurched aluminum cans take excess effort if the bin is full. Another significant reason is that aluminum cans occupy more space than needed when they are not crushed. In addition, electric can crusher make things easier and also it looks fun and exciting to do it. Moreover, electric can crusher mean more safety for using on campus. As a result, every student feels like he assist doing something beneficial and exciting by recycling their aluminum cans.

Crushing aluminum cans prior to placing them in recycling bins can benefit both an organization and the earth. Reducing the volume of aluminum allows recycling bins to be emptied less frequently. An organization can then save money by being able to reduce their number of employees. Less frequent recycling collection truck routes would be necessary, as a result. This equates to less pollution from the large recycling trucks. Another advantage, arguably more impactful, of an automated can crusher is the entertainment value of watching a can being smashed. After people try the crusher for the first time they will be both intrigued and amused by the experience. The next time they have an empty aluminum can they will be more likely to seek out the automated crusher, rather than putting the can in the trash. The advantage to a spark in recycling interest is obvious; more people will want to recycle. As more aluminum is recycled, less will need to be mined and produced.

Cost Analysis

Equipment cost needed for installation will be minimal, as the recycling bins should be easily assembled based off of the limited amount of parts involved. Maintenance will not have to occur any more often than the amount of times it should take to typically swap out a full bag from a waste container. The biggest difference will be that fewer changes of bags would be necessary, meaning less movement of parts involved. This in turn could provide an extension to the bins use. Cleaning would not be necessary as the bin is meant to handle waste products.

The potential risk of operators putting full cans or objects not aluminum related in the crusher might make for some exclusive instances for maintenance, but nothing to a very minimal amount. After a long period of time, the amount of services reserved with the amount of bags changed would equal the amount of money received from all the cans collectively.

Efficiency Advantage Gained:

Having an aluminum can crusher would give Penn State Campuses more efficiency in recycling aluminum products. One advantage of crushing recycled aluminum cans is utilizing less trash bags. When aluminum cans are recycled, trash bags will not have to be replaced as frequently. As a result, recycling aluminum cans would cost less money. Moreover, when aluminum cans are being crushed, less space will be occupied. In addition, recycling aluminum cans is a personal effort which means every person can crush his or her can easily and quickly. It would be interesting to a student to see how his or her aluminum can will crush which will draw attention to recycling. Thus, students will be more effective and interested in recycling their aluminum cans rather than just throw them away. Additionally, since it is every person's effort, it will require less worker which means saving money.

Implementation Plan:

With aluminum recycling bins currently used in most buildings, the utility of an automated can-crushing aluminum recycling bin in University Park is apparent. The implementation plan for this product begins with the removal of old bins and the introduction of new bins in their place. These innovative bins are more convenient and easily replace existing ones. In addition, the automated can-crushing bins will occupy areas with high can consumption rates. Dorm floors, commons, Beaver Stadium, apartment complexes, and Frat houses will be targeted to place these recycling bins. These areas have the greatest opportunities to increase the amount of aluminum recycling collected in University Park. While this product has an extremely low cost of operation, a substantial initial investment is required before the benefits become evident.

Conclusion

We are extremely proud of our prototype can-crushing recycling bin; it was fun to build and challenging to think of. As a team we wanted to re-innovate something old and make it better; leading us to make the most basic way of recycling more efficient. The bin is designed to increase the amount of cans that can fit into a bag thus making the changing of bags less frequent. The Aluminum Can Crusher uses aluminum to create sustainability by crushing cans, using different power sources and by having a fun way to influence students to recycle more. Plus the mere fact that the aluminum can crusher is made of aluminum itself helps increases durability as opposed to plastic bins. The Aluminum Can Crusher has the potential to have a huge impact on the Penn State Main Campus and maybe even the world.

Aluminum Can Crushing Recycling Bin Alcoa Sustainability Project

Mohamed Almaimani, Chris Campos, Andrew Houpt, Derek McBlane, Centryll Scott

PENNSTATE

ALCOA

Problem and Solution

- Problem: Uncrushed aluminum cans use space inefficiently in recycling bins
  - Recycling aluminum cans takes excess effort if bin is full
  - More frequent replacement of trash bags
- Solution: Crush the cans before putting them in the recycling bin

Design

- Recycling bin with self contained can crusher
- Two openings
  - Larger opening for other metals
  - Aluminum can crusher with transparent window covering
- Aluminum construction
  - More durable than plastic
  - Larger volume
- Powered by:
  - Outlets indoors
  - Solar power for outdoor versions

Operation

- Can crusher
  - Contained within lid assembly
  - Initiated by closing transparent window

Operation (cont.)

- Motor turns gears that move crushing arm
- Window is pulled back after crushing
- Safety Features
  - Window must be closed for crusher to operate in crushing direction.
  - If the window is forced open, crusher automatically retracts

Implementation

- Place in areas with higher can consumption rates
  - Dorms
  - Commons
  - Beaver Stadium
  - Apartment complexes
  - Frat houses
- High initial investment to manufacture for long term benefits
- Essentially no installation costs
- Very low cost of operation

Benefits

- Greater efficiency
  - Less frequent need to empty recycling bins
- Saves money in the long run
- Potential for distribution in other areas off campus
- Increased interest in recycling
  - Window is transparent so that people can watch their can be crushed
  - New design draws attention

THANK YOU!

Objective

The goal of this project as stated by Alcoa was to

"Identify opportunities across the campus to take advantage of aluminum's intrinsic properties for the purpose of increasing the efficiency or sustainability of products and product systems."

Focus

The focus for our design was on the inefficiency of the recycling system for aluminum cans.

Design & Operation

To solve our problem, we created a recycling bin with a self contained can crusher. The bin is constructed of aluminum, and has a solar powered version for outdoor use. The lid has two openings, one for miscellaneous metals, and one for aluminum cans, where they will be crushed and dropped into the bin.

The crushing arm operates when a transparent window is closed by the user. This window prevents injuries to the user, as the crushing arm will retract automatically if the window is opened. After the can is crushed, it drops into the bin, and the crushing arm catches the window and pulls it open so that the crusher is ready for the next can.

Implementation

Our plan is to place these recycling bins in places on campus with higher can consumption rates. Specifically, dorms, common areas, beaver stadium, and possibly apartment complexes and fraternity houses. Although there is a high initial investment to manufacture, installation and operation costs are very low, and there are several long term benefits from the increased efficiency and interest in recycling.

DESIGN SUMMARY

Alcoa Sustainability Project 2013 - EDSGN 100 Introduction to Engineering Design

Problem Statement

The problem was that with the large number of aluminum cans used on campus, especially in Beaver stadium and the fraternity houses, the recycling bins for metal became full of aluminum cans quickly. This increased the need for the recycling containers to be emptied frequently, wasting time and resources. Furthermore people who would potentially recycle their aluminum cans were turned to throwing their cans away.

Mission Statement

The mission was to design a system to reduce the physical size of the aluminum cans being placed in the recycling containers so that more cans could be stored before being removed, thus improving efficiency by reducing the number of bags used and the frequency with which the recycling bins need to be emptied, as well as increasing interest in recycling aluminum cans.

PENNSTATE

ALCOA

Resources

Alcoa Website:
http://www.Alcoa.com

Project Website:
http://sedtapp.psu.edu/design/design_projects/edsgn100/fa13

Course Professor's Website:
www.engr.psu.edu/xinli/edsgn100/

Contact Us

Mohamed Almaimani
mma239@psu.edu

Christopher Campos
clc5698@psu.edu

Andrew Houpt
alh5808@psu.edu

Derek McBlane
ddm5245@psu.edu

Centryll Scott
css5313@psu.edu

ALCOA SUSTAINABILITY PROJECT 2013

EDSGN 100
Introduction to Engineering Design
Xinli Wu - Section 15

Team 1
Mohamed Almaimani
Christopher Campos
Andrew Houpt
Derek McBlane
Centryll Scott

The Pennsylvania State University

PENNSTATE

ALCOA

Acknowledgements

We would like to take this opportunity to thank the Alcoa Company for sponsoring this project, The College of Engineering and our beloved teacher Xing li Wu. It has been a great year and none of this would be possible without you, so thank you.